MID-SECTION

Section 5B – Power Trim

Table of Contents

Power Trim Specifications 5B-1
Special Tools 5B-2
Power Trim Components 5B-4
Power Trim Motor 5B-6
Power Trim - General Information 5B-7
Description 5B-7
Trimming Characteristics 5B-7
Trailering Outboard 5B-8
Tilting Outboard Manually 5B-8
Trim “In” Angle Adjustment 5B-9
Striker Plate Replacement 5B-9
Anode Plate 5B-10
Trim Indicator Gauge 5B-10
Check, Fill and Purge - Power Trim System . . 5B-10
Troubleshooting 5B-12
Power Trim System with Relays and 2 Wire Trim Motor 5B-14
Electrical System Troubleshooting 5B-15
General Checks 5B-15
Troubleshooting the “Down Circuit” 5B-15
Troubleshooting the “Up” Circuit 5B-16
Troubleshooting the “Down” and “Up” Circuits (All Circuits Inoperative) 5B-17
Power Trim Assembly Removal and Installation . 5B-18
Removal 5B-18
Installation 5B-21
Testing Power Trim System With Test Gauge Kit (91-52915A6) 5B-23
“UP” Pressure Check 5B-23
“DOWN” Pressure Check 5B-26
Hydraulic Repair 5B-28
Trim Rod End Cap Seal 5B-29
Tilt Ram 5B-30
Disassembly 5B-31
Scraper Seal Replacement 5B-34
Motor and Electrical Tests/Repair 5B-38
Trim Pump Motor Test 5B-38
Motor Disassembly 5B-38
Armature Tests 5B-39
Motor Repair 5B-40
Reassembly 5B-44
Reassembly - Motor and Pump 5B-46
Priming Power Trim System 5B-47
Trim Sender Test 5B-47
Trim Indicator Gauge Needle Adjustment 5B-48
Trim Indicator Wiring Diagrams 5B-49

Power Trim Specifications

NOTE: *Maximum acceptable amount of leak down in 24 hours is 1 in. (25.4 mm)*

Test	Reading
Trim “UP”	1300 PSI (91kg/cm^2) Maximum Pressure
Trim “DOWN”	500 PSI (35kg/cm^2) Minimum Pressure

Special Tools

1. Alignment Tool 91-11230

17238

2. Trim Rod Removal Tool 91-44486A1

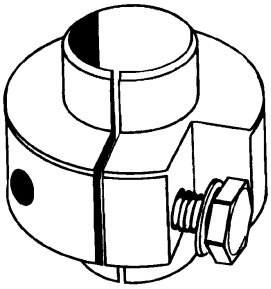

51337

3. Trim Rod Guide Removal Tool 91-44487A1

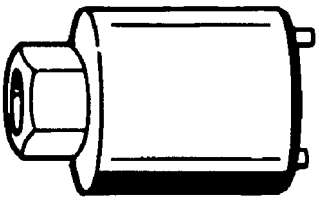

51337

4. Power Trim Test Gauge Kit 91-52915A6

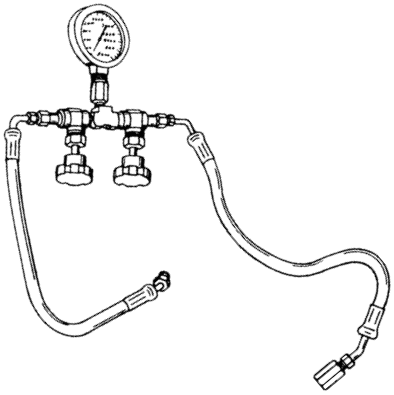

73835

5. Adaptor Fitting 91-82278A2 and 91-82278A3

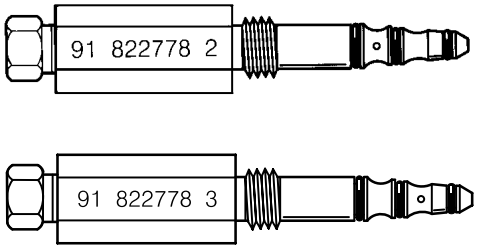

54458

6. Spanner Wrench 91-74951

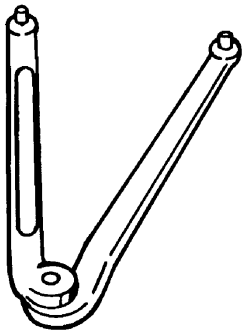

51337

7. Multi-Meter DVA Tester 91-99750A1 or DMT 2000 Digital Tachometer Multi-meter 91-854009A1

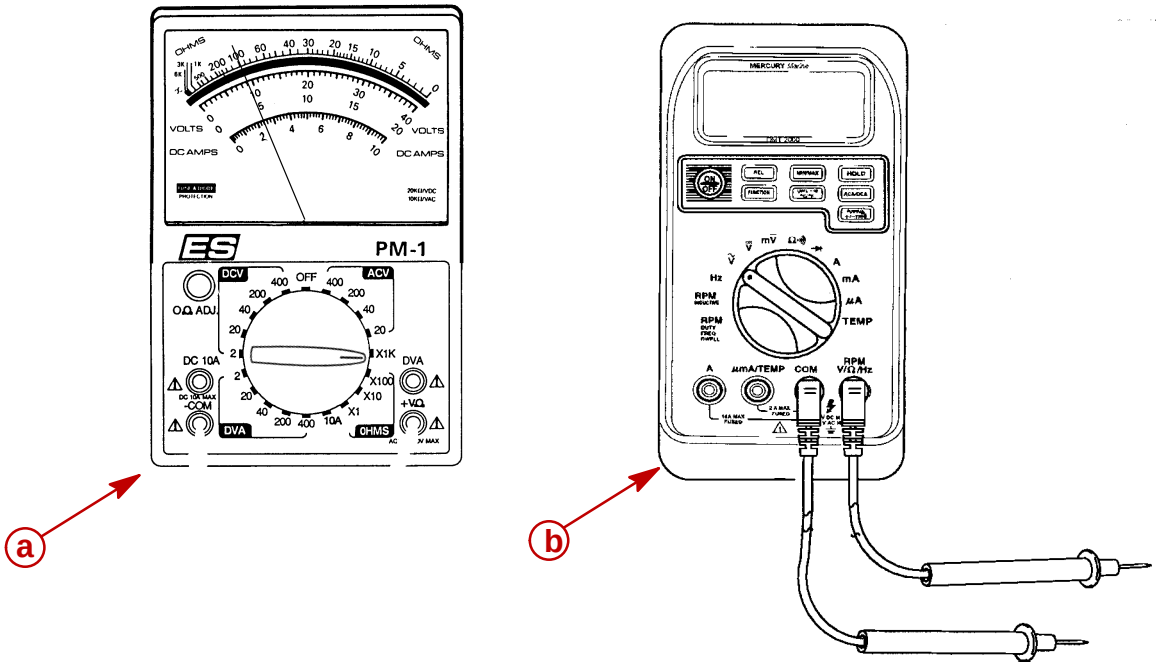

a - Multi-Meter DVA Tester 91-99750A1
b - DMT 2000 Digital Tachometer Multi-meter 91-854009A1

Power Trim Components

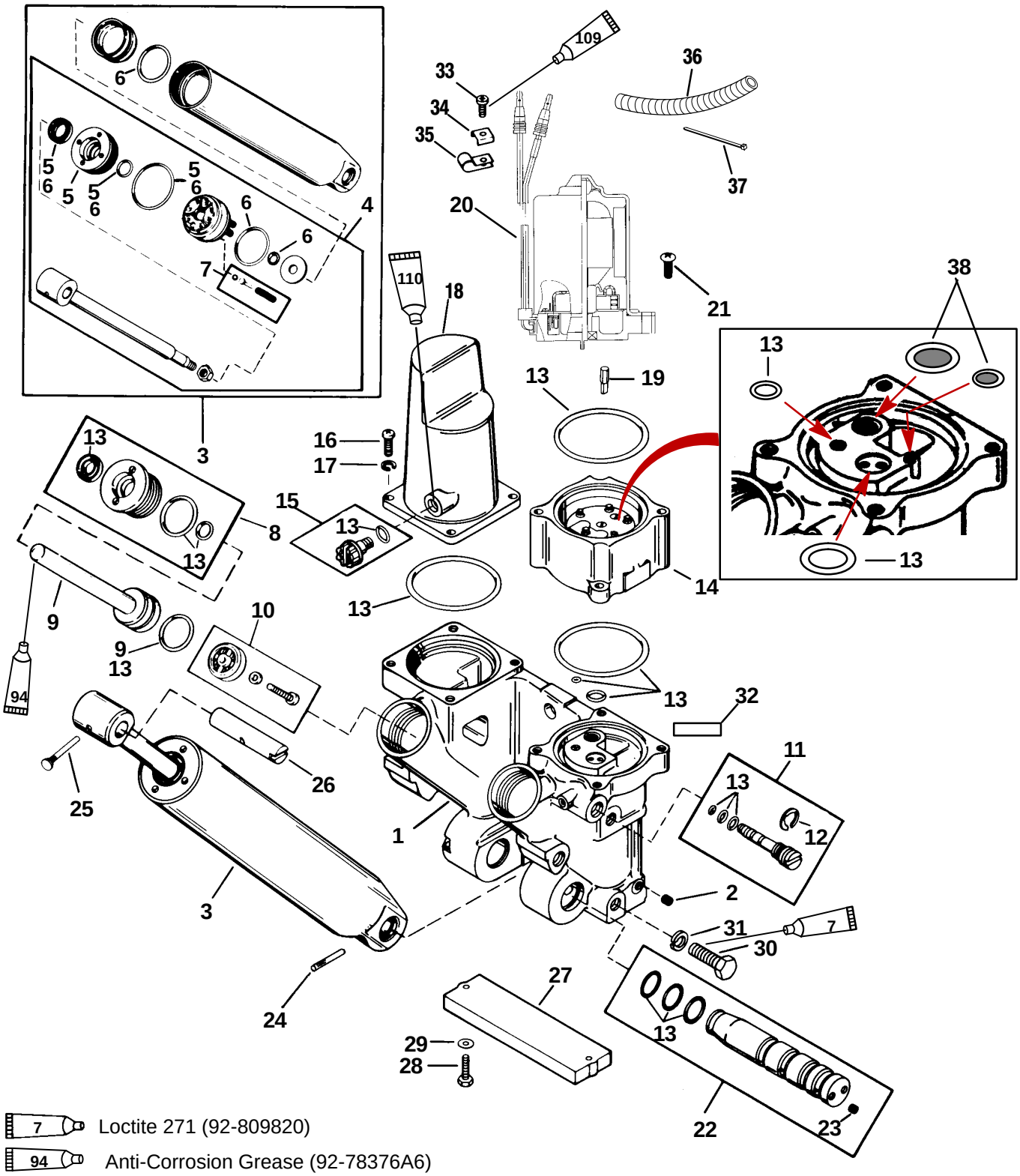

7 Loctite 271 (92-809820)

94 Anti-Corrosion Grease (92-78376A6)

109 GM Silicone Sealer (92-91600-1)

110 Power Trim & Steering Fluid (92-90100A12)

Power Trim Components

REF. NO.	QTY.	DESCRIPTION	TORQUE lb-in	TORQUE lb-ft	TORQUE Nm.
–	1	POWER TRIM ASSEMBLY–Complete			
1	1	MANIFOLD ASSEMBLY			
2	9	PIPE PLUG			
3	1	TILT CYLINDER ASSEMBLY			
4	1	PISTON ROD			
5	1	GUIDE KIT			
6	1	REPAIR KIT			
7	1	CHECK VALVE KIT			
8	2	GUIDE ASSEMBLY			
9	1	PISTON/ROD ASSEMBLY **(PORT)**			
	1	PISTON/ROD ASSEMBLY **(STBD.)**			
10	1	TRIM FILTER ASSEMBLY			
11	1	VALVE ASSEMBLY			
12	1	E RING			
13	1	O RING KIT			
14	1	PUMP			
15	1	PLUG ASSEMBLY			
16	4	SCREW			
17	4	WASHER			
18	1	COVER			
19	1	DRIVE SHAFT			
20	1	TRIM MOTOR (Breakdown on Power Trim Motor)			
21	2	SCREW **(LONG)**	80		9
	2	SCREW **(SHORT)**	80		9
22	1	SHAFT ASSEMBLY			
23	2	PIPE PLUG			
24	1	GROOVE PIN			
25	1	GROOVE PIN			
26	1	SHAFT			
27	1	ANODE ASSEMBLY			
28	2	SCREW (M6 x 1 x 25)	70		8
29	2	WASHER			
30	6	SCREW (M10 x 1.5 x 30)		45	61
31	6	WASHER			
32	1	DECAL-Caution power trim			
33	1	SCREW (10-16 x 3/5 IN.)			
34	1	C WASHER			
35	2	CLAMP			
36	1	TUBING			
37	1	STA-STRAP			
38	2	FILTER SCREENS			

NOTE: *Lubricate all o-rings with Power Trim and Steering Fluid.*

Power Trim Motor

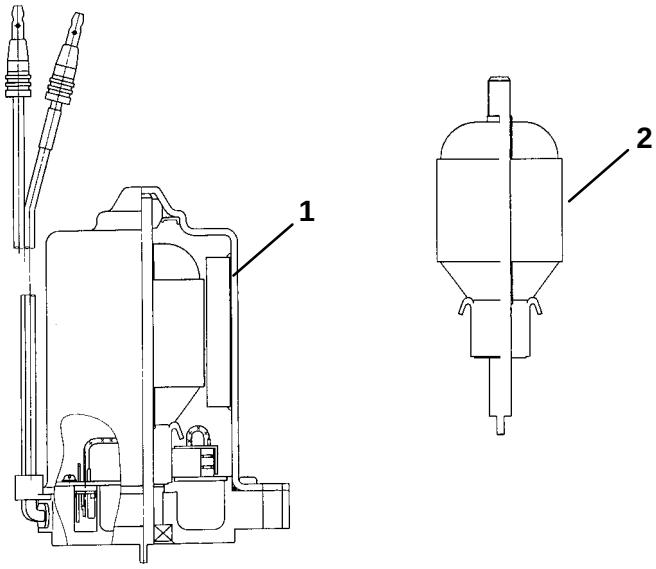

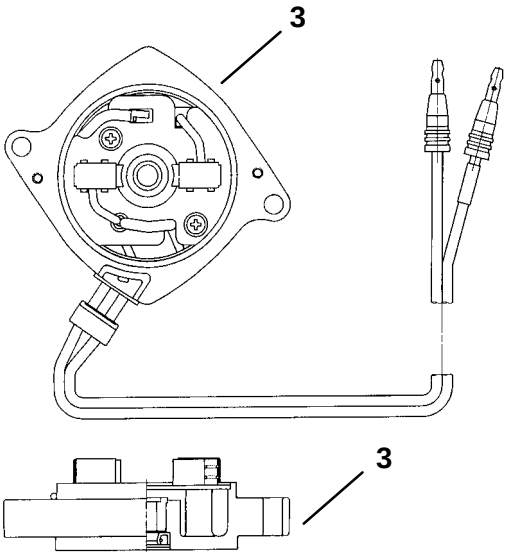

REF. NO.	QTY.	DESCRIPTION	TORQUE		
			lb.in.	lb.ft.	N·m
–	1	POWER TRIM MOTOR			
1	1	BRUSH AND SEAL KIT			
2	1	ARMATURE KIT			
3	1	END FRAME **(Complete)**			

Power Trim - General Information

Description

The Power Trim System consists of an electric motor, pressurized fluid reservoir, pump, tilt cylinder, and two trim rams.

The remote control (or trim panel) has switches that trim the outboard “Up” or “Down” and tilt the engine for “Trailering”. The outboard can be trimmed and tilted under power or when the outboard is not running.

Trimming Characteristics

NOTE: *Because hull designs react differently in varying water conditions, varying the trim position will often improve the ride and boat handling. When trimming from a mid-trim position (with outboard trim tab in a straight fore and aft position), expect the following:*

TRIMMING OUTBOARD “UP” (OUT):

⚠ WARNING

Excessive trim “Out” may reduce the stability of some high speed hulls. To correct instability, reduce the power gradually and trim the outboard “In” slightly before resuming high speed operation. A rapid reduction in power will result in a sudden change of steering torque and may cause additional boat instability.

Will lift boat bow, increasing top speed.

Transfers steering torque harder to port (left) on installations below 23 in. (584.2 mm) transom height.

Increases gearcase clearance over submerged objects.

Excess trim can cause “porpoising” and/or ventilation.

⚠ WARNING

Excessive outboard trim angle will result in insufficient water supply causing water pump and/or powerhead overheating damage. Insure water level is above water intake holes whenever outboard is running.

The “Up” circuit actuates the up solenoid (under outboard cowl) and closes the motor circuit. The electric motor drives the pump, forcing fluid thru passageways into the up side of the trim cylinders.

The trim cylinders position the outboard at the desired trim angle in the 20 degree maximum trim range. The system will not allow the outboard to be trimmed above the 20 degree trim range as long as the engine RPM is above approximately 2000 RPM.

The outboard can be trimmed above the 20 degree maximum trim angle (for shallow water operation, etc.), by keeping the engine RPM below 2000. If the RPM increases over 2000, propeller thrust (if propeller is deep enough) will cause the trim system to return the outboard to the 20 degree maximum trim position.

TRIMMING OUTBOARD “DOWN” (IN):

⚠ WARNING

Excessive speed at minimum trim “In” may result in undesirable and/or unsafe steering conditions. Test for handling characteristics after any adjustment is made to the trim angle (and tilt pin location).

Aids planing, particularly with heavy loads.

Improves ride in choppy water conditions.

Excess trim “In” can cause “bow steer” (boat veers to left or right).

Transfers steering torque to starboard (right).

Improves acceleration to planing speed.

The “Down” circuit actuates the down solenoid (under engine cowl) and closes the motor circuit. The electric motor drives the pump in the opposite direction as the up circuit, forcing fluid thru passageways into the “down” side of the tilt ram. The tilt ram moves the engine down to the desired position.

Trailering Outboard

The “Up” circuit first moves the trim cylinders; when the trim cylinders extend fully, the tilt ram extends to tilt the outboard to the full up position for trailering.

Before the boat is trailered, the operator should check for clearance between the outboard skeg and pavement to prevent damage to skeg from striking pavement.

If the outboard must be tilted for clearance between skeg and pavement, a device such as a “Transom Saver” should be installed to prevent stress to boat transom from outboard weight while the boat/outboard are being trailered.

Tilting Outboard Manually

⚠ WARNING

Before opening the manual release valve knob, insure all persons are clear of outboard as outboard will drop to full “Down” when valve is opened.

The outboard can be raised or lowered manually by opening the manual release valve 3 to 4 turns counterclockwise. Close manual release valve to hold outboard at the desired tilt position.

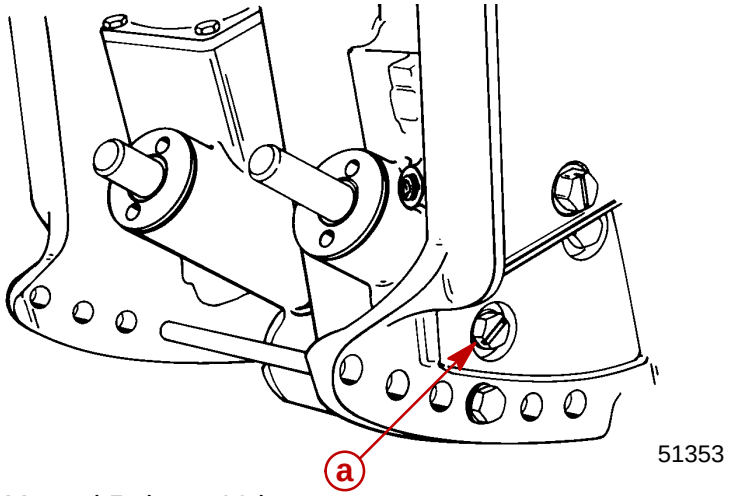

a - Manual Release Valve

Trim “In” Angle Adjustment

⚠ WARNING

Boat operation with outboard trimmed to the full “In” trim angle [not using the trim angle adjustment bolt (a)] at planing speed may result in undesirable and/or unsafe steering conditions. A water test for handling/steering conditions is required after any trim angle adjustments.

IMPORTANT: Some boat/motor combinations not using the trim angle adjustment pin (a) and trimmed to the full “In” trim angle position may not exhibit any undesirable and/or unsafe handling and/or steering characteristics at planing speed. If so, not using the trim angle adjustment bolt may be advantageous to acceleration and planing. A water test is required to determine if these characteristics apply to a particular boat/motor combination.

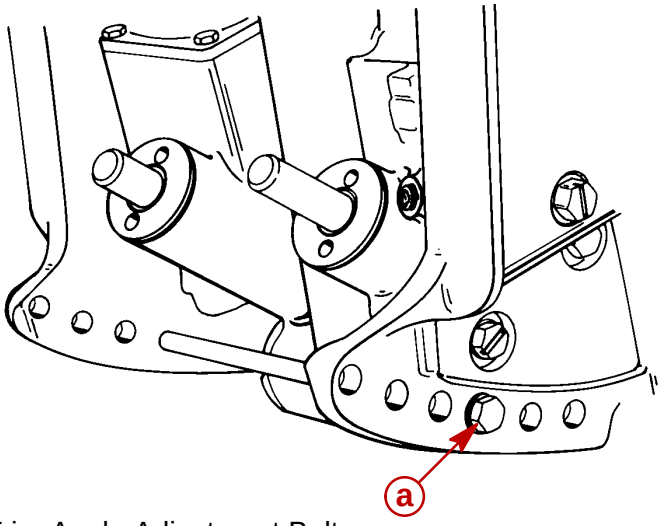

51353

a - Trim Angle Adjustment Bolt

Striker Plate Replacement

Visually inspect striker plates and replace if worn excessively.

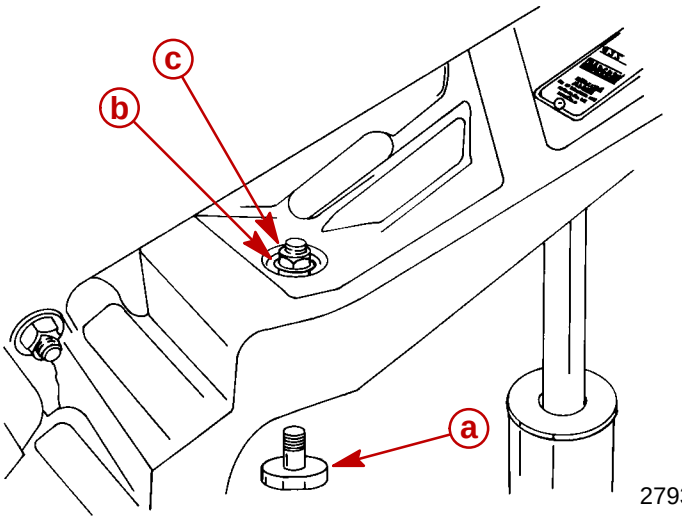

27930

a - Striker Plate (2)
b - Lockwasher
c - Locknut. Torque to 80 lb. in. (9 Nm)

Anode Plate

Anode plate is a self-sacrificing alloy plate that is consumed gradually by corrosion while providing protection to the midsection and power trim from galvanic corrosion. Replace anode plate when it is 50% consumed.

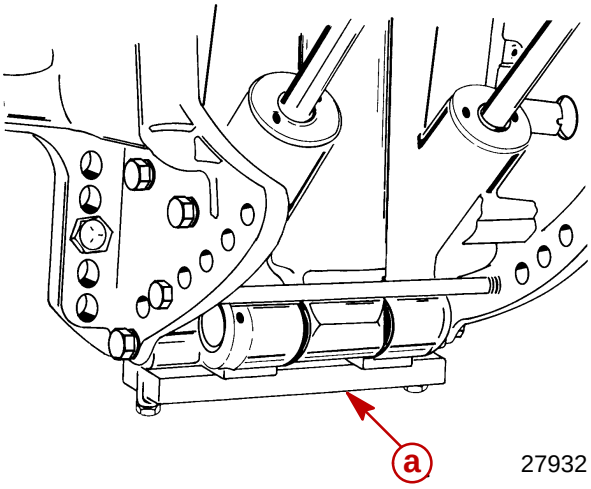

a - Anode Plate

IMPORTANT: Do not paint or place protective coating on anode plate, or corrosion protection function will be lost.

Trim Indicator Gauge

A Quicksilver Trim Indicator Gauge accessory kit is available for the power trim sender (if not previously installed).

Check, Fill and Purge - Power Trim System

TO CHECK:

⚠ CAUTION

Tilt outboard to full "Up" position and engage tilt lock lever before checking fluid level. System is pressurized. Extend trim and tilt rams fully to depressurize system.

Remove fill plug and O-ring. System is full when oil level is present at filler hole. Tighten fill plug securely.

NOTE: *Automatic Transmission Fluid (ATF) Type F, FA, Dexron II or Dexron III may be used.*

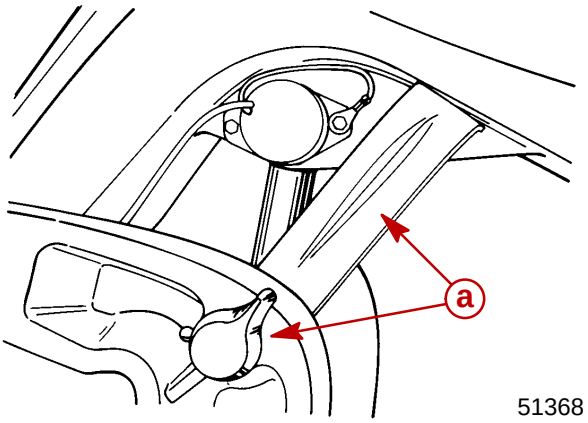

a - Tilt Lock Lever

TO FILL:

IMPORTANT: This trim system is pressurized. Remove “Fill” plug only when outboard is tilted to the full “Up” position or the trim/tilt rams are fully extended. Retighten “Fill” plug before tilting outboard down or retracting tilt/trim rams. Remove “Fill” plug and O-ring. System is full when oil level is present at fill hole. Tighten “Fill” plug securely.

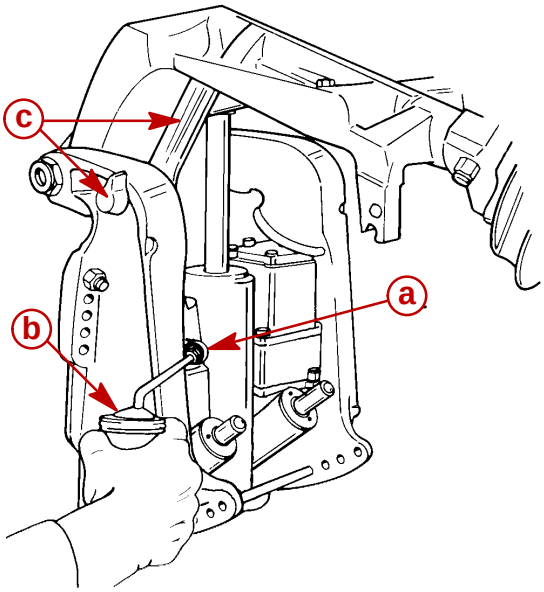

51344

a - Fill Plug and O-ring (remove to fill system, tighten securely)
b - Oil Can (fill system with Quicksilver Power Trim and Steering Fluid)
c - Tilt Lock Lever (engage to support engine in “Up” position)

TO PURGE:

IMPORTANT: Fill plug and O-ring must be tightened securely before purging system.

IMPORTANT: Run Trim System in short “jogs” until pump is primed and trim system moves. If trim motor is run without priming pump, driveshaft failure could result.

Cycle outboard through entire trim/tilt range 4 times. Check fluid level after purging system.

Push down on outboard when trim rams are slightly extended. If rams retract more than 1/8 in. (3.2 mm), air is present in system. Cycle system again and check fluid level.

Troubleshooting

IMPORTANT: Determine if Electrical or Hydraulic problem exists.

IMPORTANT: Acceptable power trim leak down should not exceed 1 in. (25.4 mm) (when measured at the tilt ram) in a 24 hour period.

HYDRAULIC SYSTEM TROUBLESHOOTING

IMPORTANT: Make one correction at a time. Check operation of trim system before proceeding to the next check.

CONDITION OF TRIM SYSTEM	PROBLEM
A. Trim motor runs; trim system does not move up or down.	1, 2, 5, 10
B. Does not trim full down. Up trim OK.	2, 3, 4
C. Does not trim full up. Down trim OK.	1, 6
D. Partial or “Jerky” down/up.	1, 3
E. “Thump” noise when shifting.	2, 3, 6, 7
F. Does not trim under load.	5,8, 9,10
G. Does not hold trim position under load.	2, 5, 6
H. Trail out when backing off from high speed.	3, 4
I. Leaks down and does not hold trim.	2, 5, 7
J. Trim motor working hard and trims slow up and down.	8, 9
K. Trims up very slow.	1, 2, 8, 9
L. Starts to trim up from full down position when “IN” trim button is depressed.	3, 4
M. Trim position will not hold in reverse.	3, 4

PROBLEM

1. Low oil level.
2. Pump assembly faulty.
3. Tilt ram piston ball not seated (displaced, dirt, nickel seat).
4. Tilt ram piston O-ring leaking or cut.
5. Manual release valve leaking (check condition of O-rings) (Valve not fully closed).
6. Lower check valve not seating in port side trim ram.
7. Upper check valve not seating in port side trim ram.
8. Check condition of battery.
9. Replace motor assembly.
10. Broken motor/pump drive shaft.

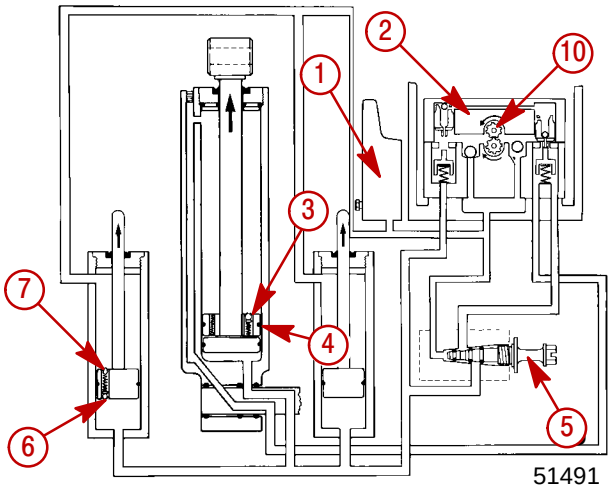

External Mounted Hydraulic System

ELECTRICAL SYSTEM TROUBLESHOOTING

CONDITION OF TRIM SYSTEM	PROBLEM
A. Trim motor does not run when trim button is depressed.	1, 2, 4, 5, 6, 7, 8
B. Trim system trims opposite of buttons.	3
C. Cowl mounted trim buttons do not activate trim system.	2, 4, 5, 6, 7

PROBLEM

1. Battery low or discharged.
2. Open circuit in trim wiring.
3. Wiring reversed in remote control.
4. Wire harness corroded through.
5. Internal motor problem (brushes, shorted armature).
6. Blown fuse(s).
7. Trim switch failure.
8. Verify relays are functioning correctly.

POWER TRIM RELAY TEST PROCEDURE

The trim motor relay system used on permanent magnet trim systems connect each of the two wires from the trim motor to either ground or positive in order to allow the motor to run in both directions.

If the motor will not run in the UP direction, it could be either the UP relay is not making contact to 12 volts **OR** the DOWN relay is not making contact to ground. The opposite is true if the system will not run DOWN. When the system is not energized, both relays should connect the heavy motor leads to ground.

To test which relay is faulty if the trim system does not operate in one direction:

1. Disconnect the heavy gauge pump wires from the trim control relay.
2. Check for continuity between the heavy leads from the trim relays to ground.

Ohmmeter Leads Between	Resistance (Ohms)	Scale Reading (R x 1)
GREEN and Ground	0	Full Continuity (Rx1)
BLUE and Ground	0	Full Continuity (Rx1)

Replace the relay that does not have continuity.

3. Connect a voltmeter to the heavy BLUE lead and to ground. You should have 12 volts on the BLUE lead when the UP switch is pushed. You should should also have 12 volts on the GREEN lead when the DOWN switch is pushed. Replace the relay that does not switch the lead to positive.

Power Trim System with Relays and 2 Wire Trim Motor

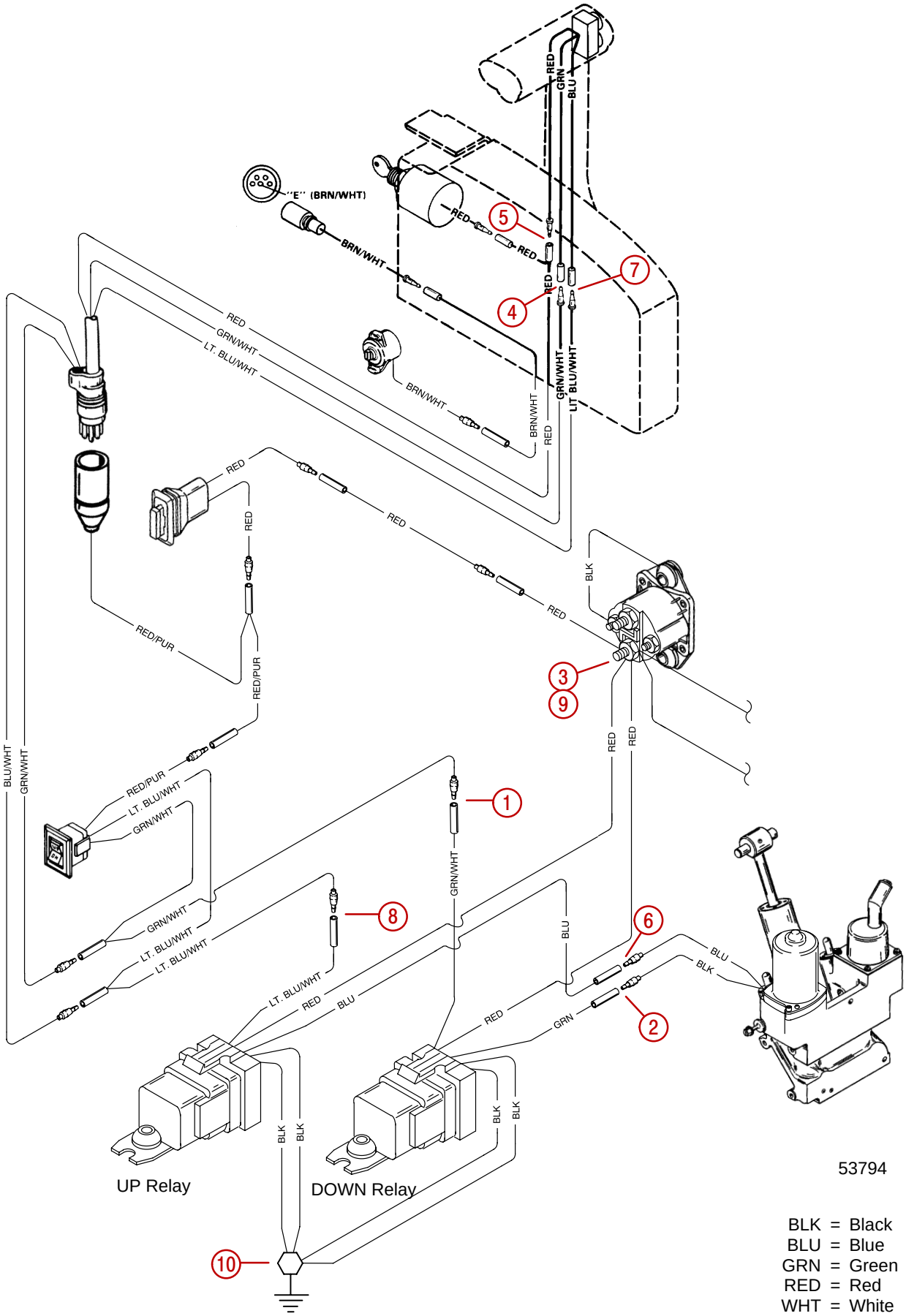

BLK = Black
BLU = Blue
GRN = Green
RED = Red
WHT = White

Electrical System Troubleshooting

General Checks

Before troubleshooting the Power Trim electrical system, check the following:

1. Check for disconnected wires.
2. Make certain all connections are tight and corrosion free.
3. Check that plug-in connectors are fully engaged.
4. Make certain battery is fully charged.

Refer to the preceding four wiring diagrams for connection points when troubleshooting the electrical systems (Connection points are specified by number.)

Troubleshooting the “Down Circuit”

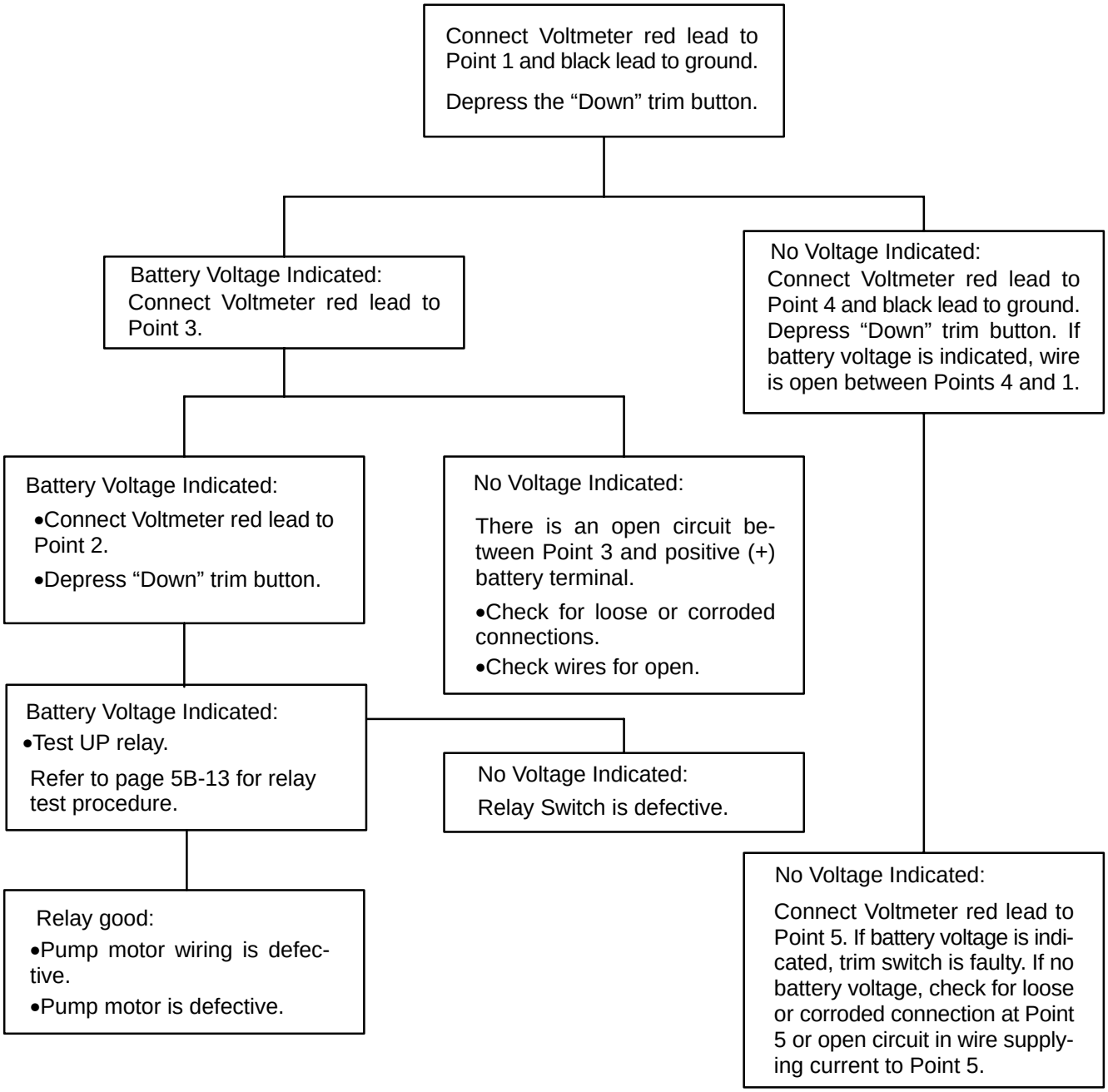

Troubleshooting the “Up” Circuit

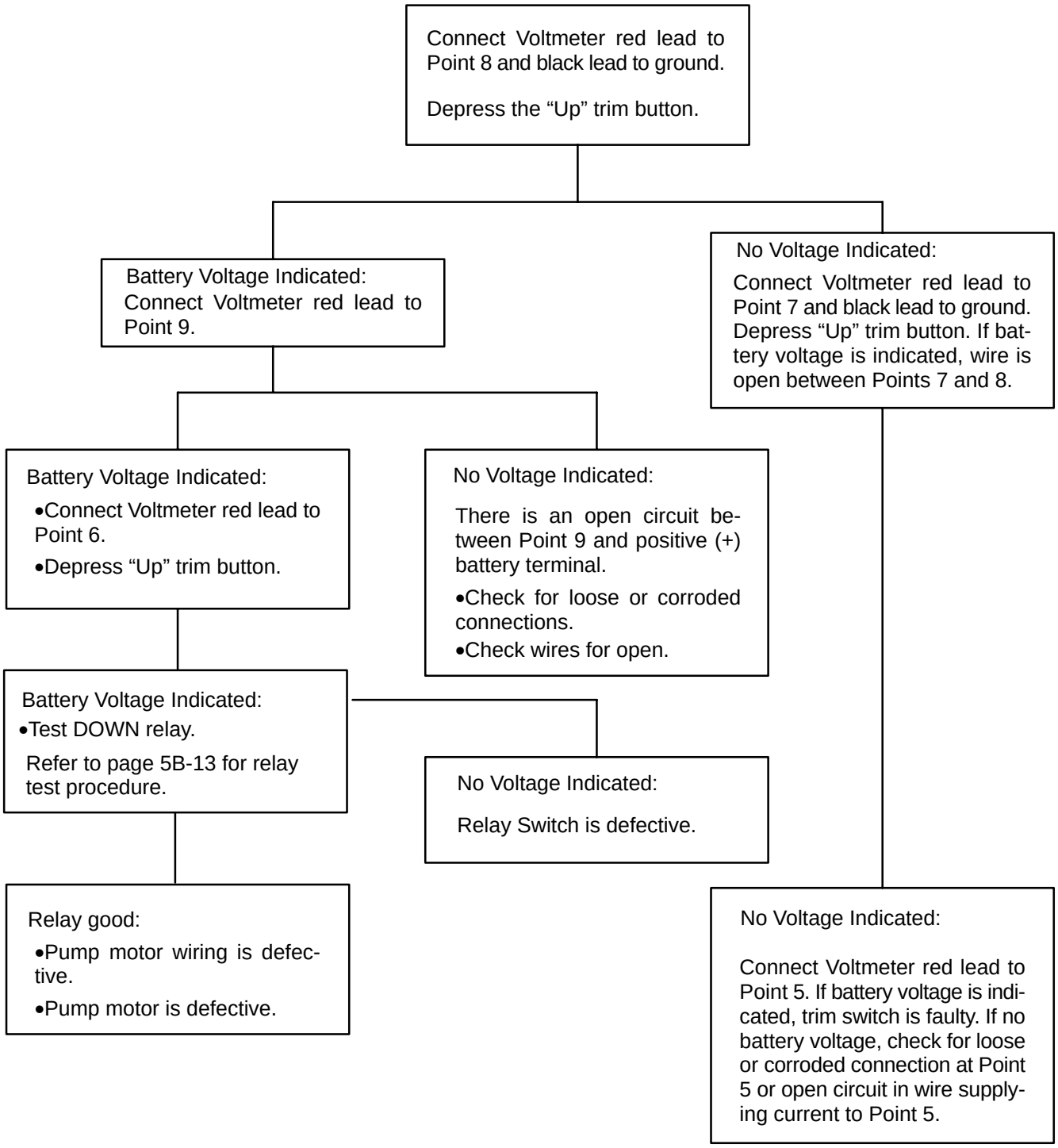

Troubleshooting the “Down” and “Up” Circuits (All Circuits Inoperative)

Check in-line fuse (under cowl) to see if fuse is blown.

Blown Fuse:

- Correct problem that caused fuse to blow.
- Replace fuse.

Fuse Not Blown:

Connect Voltmeter red lead to Point 3 and black lead to ground. Battery voltage should be indicated.

No Voltage Indicated:

- Check battery leads for poor connections or open circuits.
- Check battery charge.

Battery Voltage Indicated:

- Connect Voltmeter red lead to Point 8 and black lead to ground.
- Depress “Up” trim button and check for battery voltage.

No Voltage Indicated:

Connect red Voltmeter lead to Point 5, and black lead to ground.

Battery Voltage Indicated:

- Check black ground wires for poor connection or poor ground, Point 10.
- Pump motor is faulty. Refer to “Motor and Electrical Tests/ Repair”, following.

No Voltage Indicated:

Check that voltage is being supplied to control by performing the following checks:

- DO NOT start engine.
- Turn ignition switch to “Run” position.
- Check for voltage at any instrument, using a Voltmeter.

Battery Voltage Indicated:

Trim switch is faulty or there is an open circuit in wires (green-white, blue-white) between trim buttons and trim pump.

- Check trim switch.
- Check all trim harness connectors for loose or corroded connections.
- Check for pinched or severed wires.

No Voltage Indicated:

Red wire is open between Point 3 and red terminal on back of the ignition switch.

- Check for loose or corroded connections.
- Check for open in wire.

Battery Voltage Indicated:

There is an open circuit in wire between Point 5 and Red terminal on the back of the ignition switch.

Power Trim Assembly Removal and Installation

Removal

1. Remove clamps on transom bracket to free power trim wiring.
2. Raise outboard to full “Up” position and engage tilt lock lever.

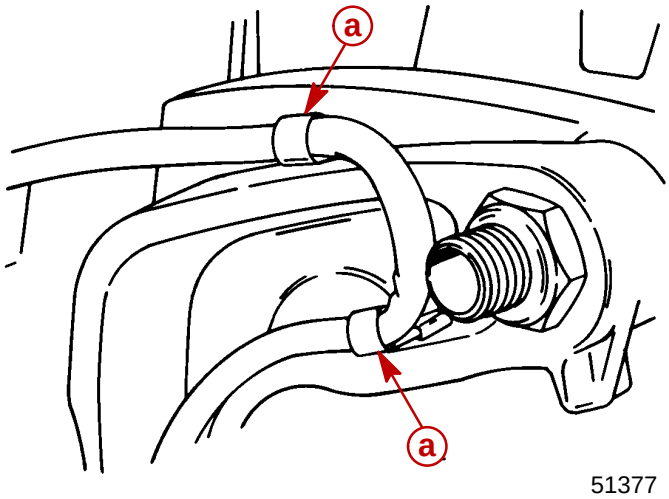

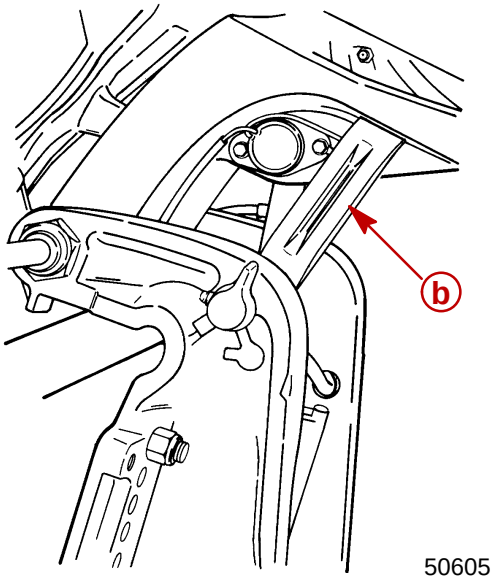

a - Clamps
b - Tilt Lock Lever

⚠ WARNING

Failure to support outboard as shown could result in personal injury and/or damage to outboard or boat.

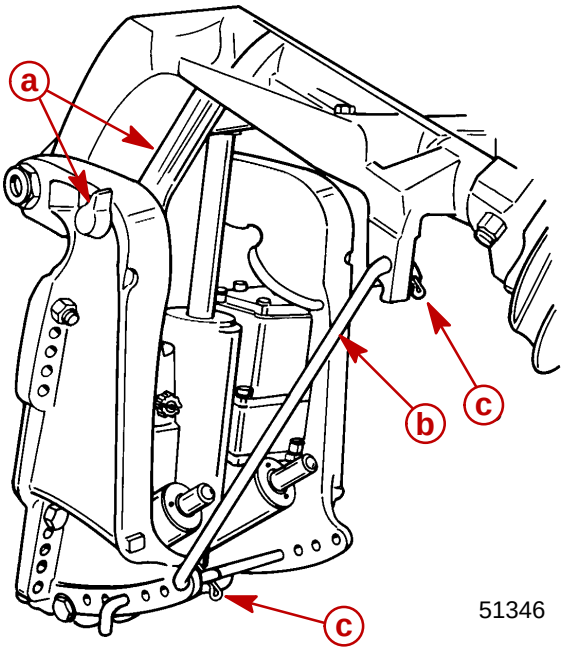

a - Tilt Lock Lever
b - Support Tool
c - Retaining Clips

IMPORTANT: Support outboard as shown above to prevent engine from tipping when power trim retaining pin is removed.

SUPPORT TOOL

3/8 in. diameter metal rod (a used shift shaft works well)

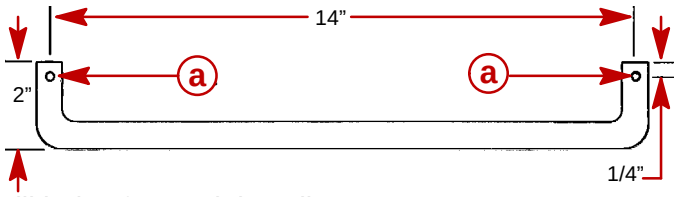

a - Drill holes for retaining clips

METRIC CONVERSION

14 in. = 35.56 cm.	2 in. = 50.8 mm
3/8 in. = 9.5 mm.	1/4 in. = 6.35 mm.

⚠ CAUTION

Disconnect battery cables at battery before removing power trim wires from solenoids.

3. Disconnect power trim wires at solenoids (BLUE, GREEN, and BLACK) or if relay style, disconnect (BLUE and GREEN) bullet connector harness.
4. Open filler cap and release any remaining pressure in the system.

IMPORTANT: Outboards equipped with thru-the-tilt-tube steering - remove steering link arm from end of steering cable and cable retaining nut from tilt tube.

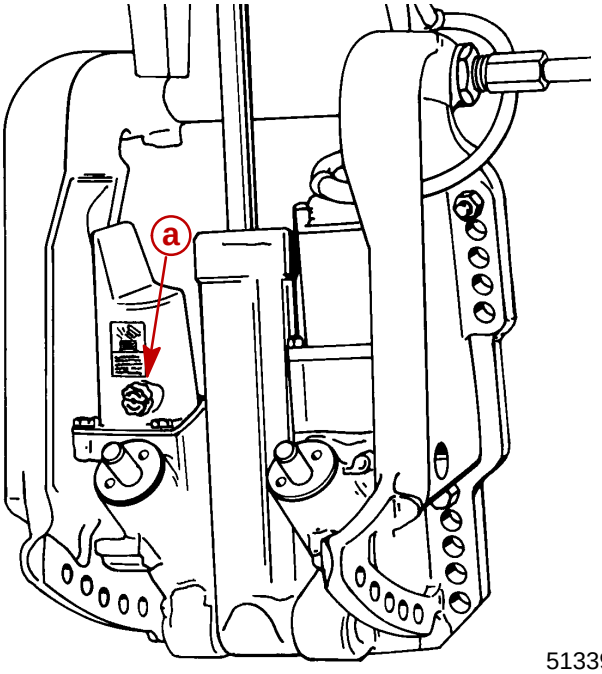

51339

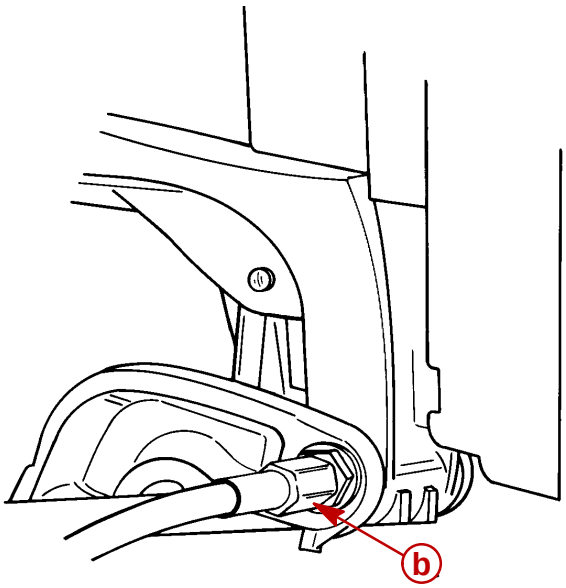

51354

a - Filler Cap
b - Retaining Nut

5. Remove outboard transom mounting bolts, and loosen tilt tube nut until nut is flush with end of tilt tube thread.
6. Remove 3 screws and washers and move starboard transom bracket.

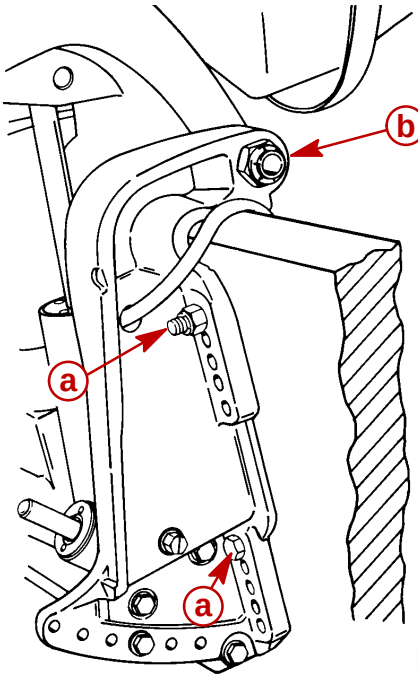

51375

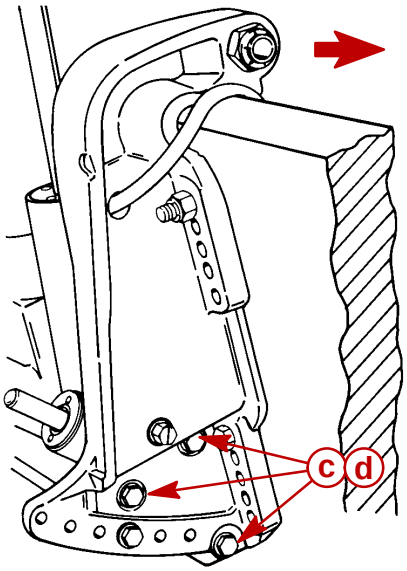

51375

a - Transom Mount Bolts (2)
b - Tilt Tube Nut (flush with end of thread)
c - Screws (3)
d - Washers (3)

IMPORTANT: Cross pin (a) should not be reused. Replace with new cross pin.

7. Drive out cross pin, push out upper swivel pin, and remove 3 screws and washers retaining trim system. Remove system from outboard.

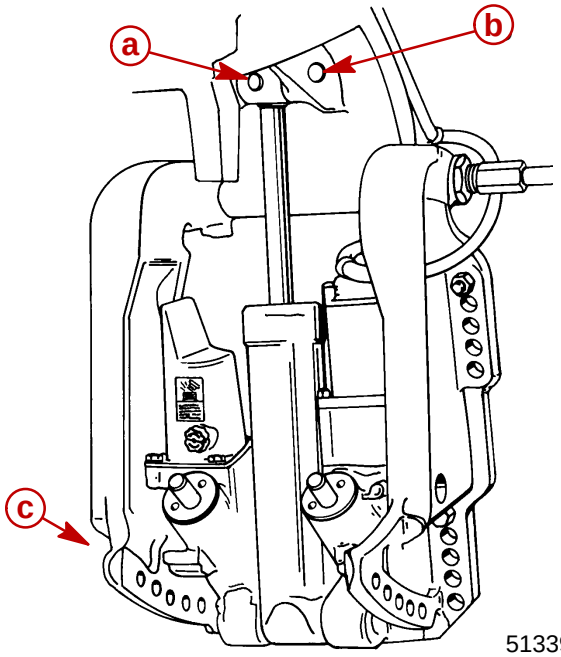

51339

a - Cross Pin
b - Upper Swivel Pin
c - Port Transom Bracket Screws and Washers (3). Remove to Release Trim System from Outboard.

Installation

1. Paint any exposed metal surfaces to prevent corrosion.
2. Apply Loctite 271 to screws. Install trim system, starboard transom bracket, and tilt tube nut.
3. Use a 12 volt power source to extend tilt ram up to align upper swivel shaft hole and end of ram. Connect trim motor wires [BLUE wire to POSITIVE (+), BLACK wire to NEGATIVE (–)]. If ram extends too far, retract ram by connecting GREEN wire to POSITIVE (+).
4. Install Upper Swivel Pin with slotted end to left (port) side of engine.

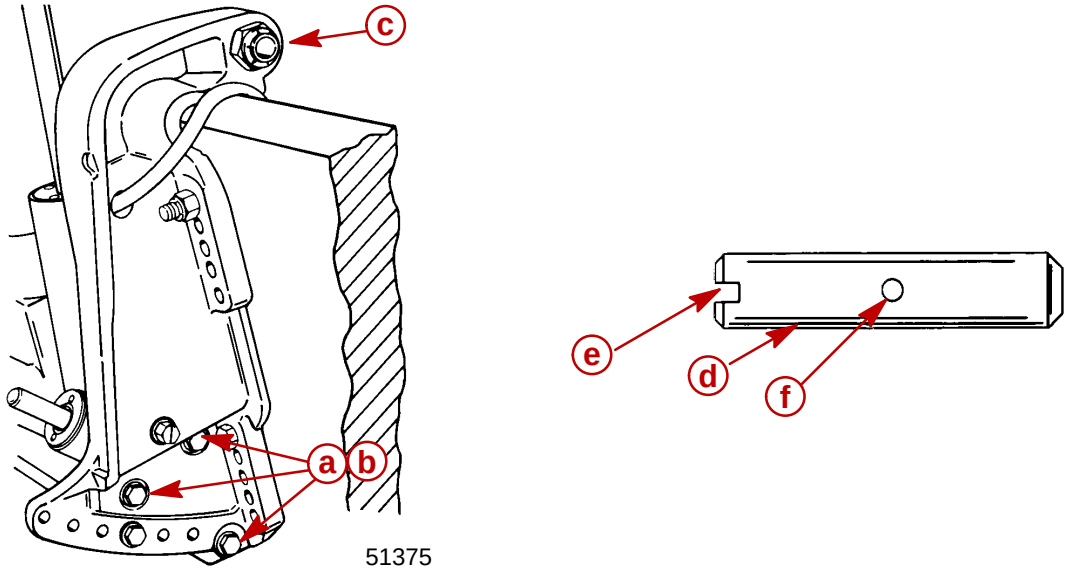

a - Screw (6) Torque to 40 lb. ft. (54.0 N·m)
b - Lockwasher (6) Install one per screw
c - Tilt Tube Nut
d - Upper Swivel Pin
e - Slotted end
f - Cross hole (in line with slotted end)

IMPORTANT: Cross pin should not be reused. Install a new pin.

5. Position slot on end of swivel shaft in line with hole in tilt ram end. Insert a punch into tilt ram hole to align cross hole in upper swivel shaft. Tap new cross pin in until flush.

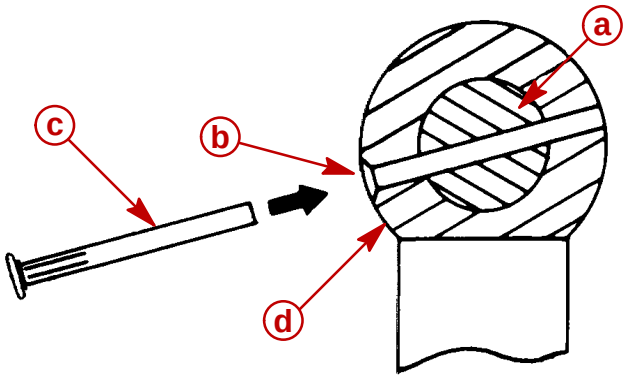

a - Upper Swivel Shaft (Slot is in line with cross hole)
b - Chamfered End of Hole (Faces away from transom)
c - Retaining Pin
d - Tilt Ram End

6. Connect trim motor wires to solenoids. Refer to Wiring Diagrams in this manual. Route trim wires as specified in this manual.

NOTE: *The 2 power leads going to the trim motor should be encapsulated with conduit tubing. If tubing has not been previously installed, order 32-828547-353 and cut to appropriate length.*

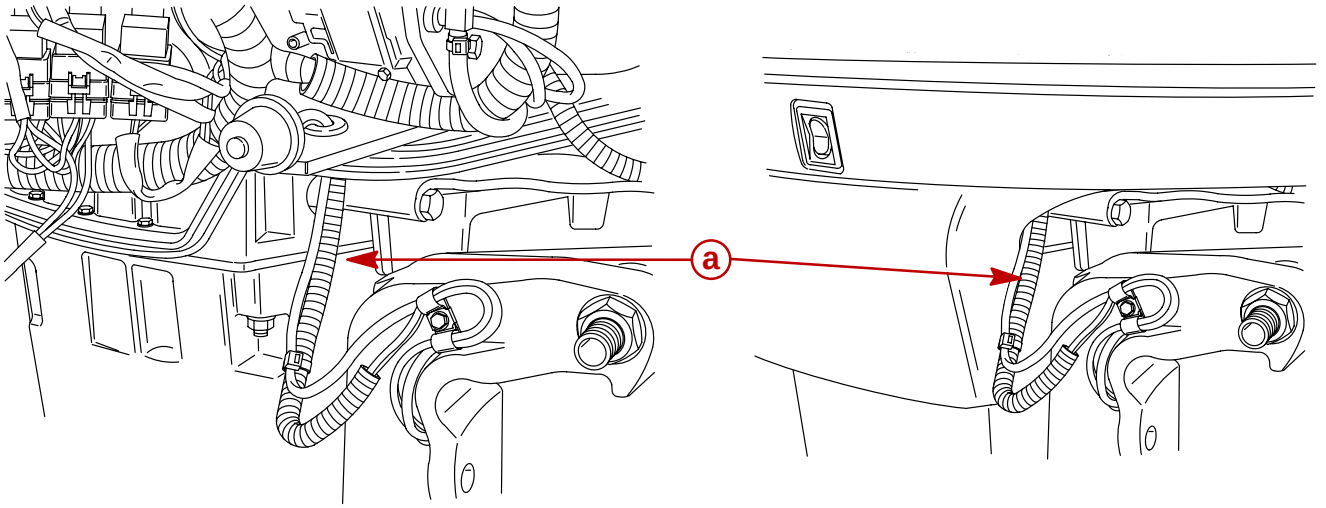

56921 56922

a - Conduit Tubing

7. Apply marine sealer to shanks of mount bolts and install transom mount bolts.

IMPORTANT: Do not use an impact driver to tighten transom mount bolts.

Apply marine sealer to threads of mount bolts. Secure with flat washers and locknuts. Be sure installation is watertight.

8. Tighten tilt tube nut securely.

IMPORTANT: Outboards equipped with thru-the-tilt-tube steering: Tighten steering cable retaining nut securely to tilt tube.

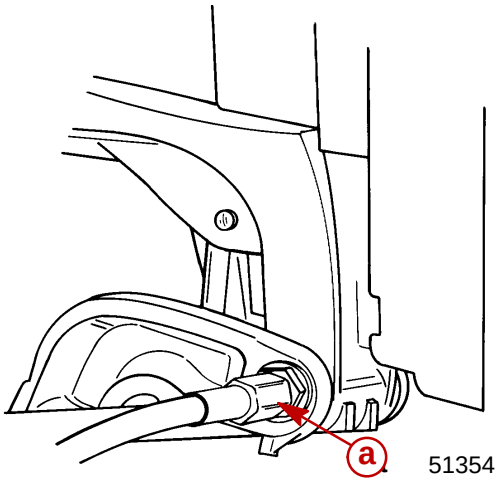

51354

a - Steering Cable Retaining Nut

9. Apply Quicksilver Liquid Neoprene (91-25511--2) on all electrical connections.

⚠ WARNING

Electrical wires passing through cowl openings must be protected from chafing or being cut. Follow the recommended procedures outlined in Section 1D of this Manual. Failure to protect wires as described could result in electrical system failure and/or injury to occupants of boat.

Testing Power Trim System With Test Gauge Kit (91-52915A6)

IMPORTANT: This test will not locate problems in the trim system. The test will show if the system is correct after a repair. If minimum pressures are not obtainable, the trim system requires additional repair.

“UP” Pressure Check

IMPORTANT: Insure battery is fully charged before performing tests.

1. Tilt outboard to full “Up” position and engage tilt lock lever.
2. Slowly remove “Fill” plug to bleed pressure from reservoir.
3. Remove circlip securing manual release valve and unscrew release valve from trim assembly.

NOTE: *A small amount of trim fluid may drip from manual release valve hole. Place a suitable container under trim assembly to collect any leakage.*

NOTE: *Assemble test adaptor by using O-ring installation tool to position small O-ring onto adaptor 1st, then install medium O-ring and lastly large O-ring. Thread brass fitting into test adaptor securely using teflon tape on threads.*

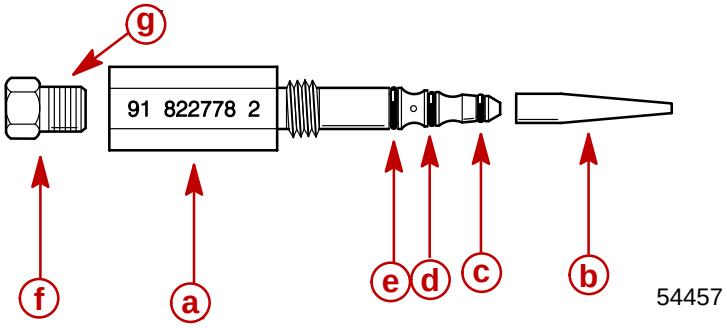

a - Test Adaptor (91-822778A2)
b - O-ring Installation Tool
c - Small O-ring (Install 1st)
d - Medium O-ring (Install 2nd)
e - Large O-ring (Install Last)
f - Brass Fitting
g - Apply Teflon Tape

4. Install test adaptor 91-822778A2 into manual release valve hole.

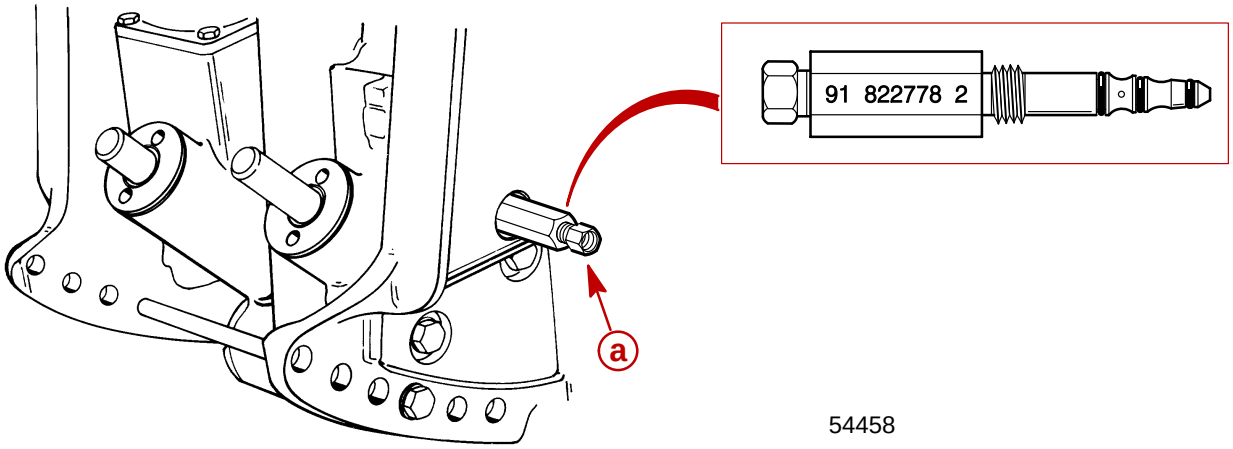

a - Test Adaptor (91-822778A2)

5. Thread hose from Test Gauge Kit (91-52915A6) into brass fitting on adaptor.

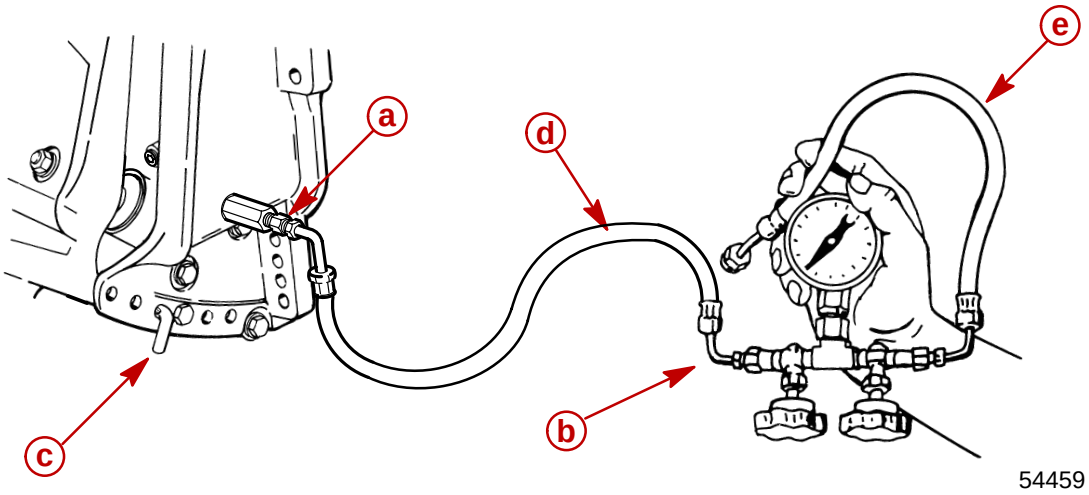

a - Brass Fitting
b - Test Gauge Assembly
c - Tilt Pin (Position in Hole Shown)
d - Hose
e - Hose (Not Used)

6. Reinstall fill plug.
7. Disengage tilt lock lever.

⚠ CAUTION

Failure to install spare tilt pin (or hardened bolts and nuts) in hole shown could result in transom bracket failure and possible injury.

8. Move outboard “IN” until hole in swivel bracket “ear” aligns with the 3rd tilt hole in transom bracket. Lock engine in trim range by installing a 3/8 in. (9.5 mm) diameter tilt pin or two 3/8 in. (9.5 mm) hardened bolts and nuts thru the transom brackets and swivel bracket in the hole shown.

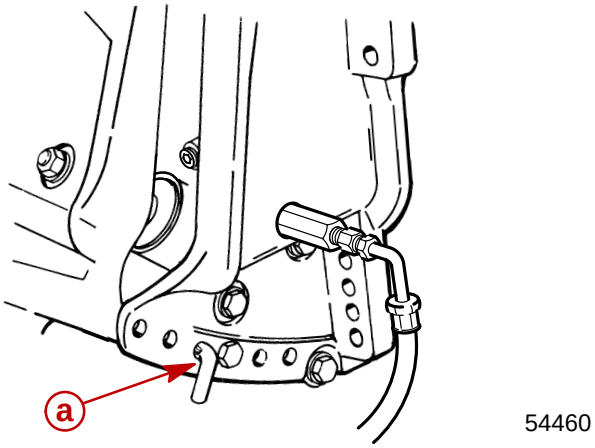

a - Tilt Pin Hole (Install Spare Tilt Pin or Hardened Bolts and Nuts)

9. Open valve (a) and close valve (b).

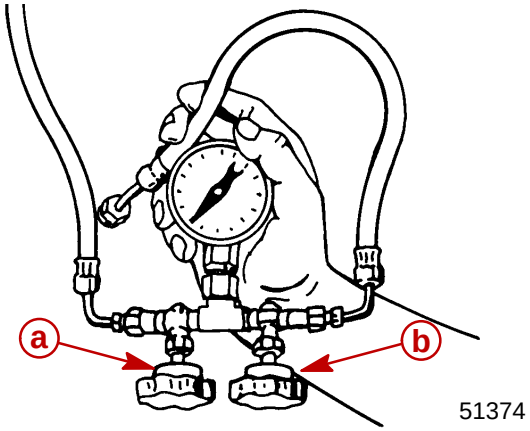

10. Run trim “UP”. The minimum pressure should be 1300 P.S.I. (91 kg/cm^2).
11. Run trim “DOWN” to release pressure and remove spare tilt pin or bolts and nuts.
12. Tilt outboard full “UP” and engage tilt lock lever.
13. Slowly remove “Fill” plug to bleed pressure.
14. Remove test gauge hose and adapter.
15. Reinstall Manual Release Valve and secure valve with circlip.
16. Retighten “Fill” plug.

NOTE: *If pressure is less than 1300 PSI (91 kg/cm^2), troubleshoot system per instructions on page 5B-16.*

“DOWN” Pressure Check

IMPORTANT: Insure battery is fully charged before performing tests.

1. Tilt outboard to full “Up” position and engage tilt lock lever.
2. Slowly remove “Fill” plug to bleed pressure from reservoir.
3. Remove circlip securing manual release valve and unscrew release valve from trim assembly.

NOTE: *A small amount of trim fluid may drip from manual release valve hole. Place a suitable container under trim assembly to collect any leakage.*

NOTE: *Assemble test adaptor by using O-ring installation tool to position small O-ring onto adaptor 1st, then install medium O-ring and lastly large O-ring. Thread brass fitting into test adaptor securely using teflon tape on threads.*

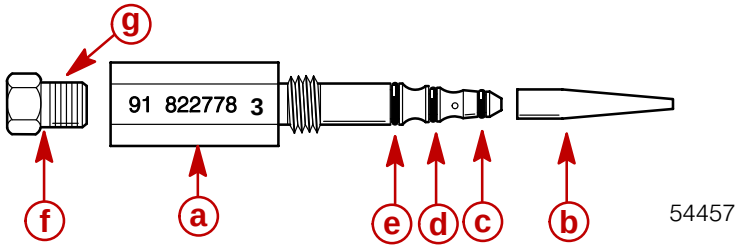

a - Test Adaptor (91-822778A3)
b - O-ring Installation Tool
c - Small O-ring (Install 1st)
d - Medium O-ring (Install 2nd)
e - Large O-ring (Install Last)
f - Brass Fitting
g - Apply Teflon Tape

4. Install test adaptor 91-822778A3 into manual release valve hole.

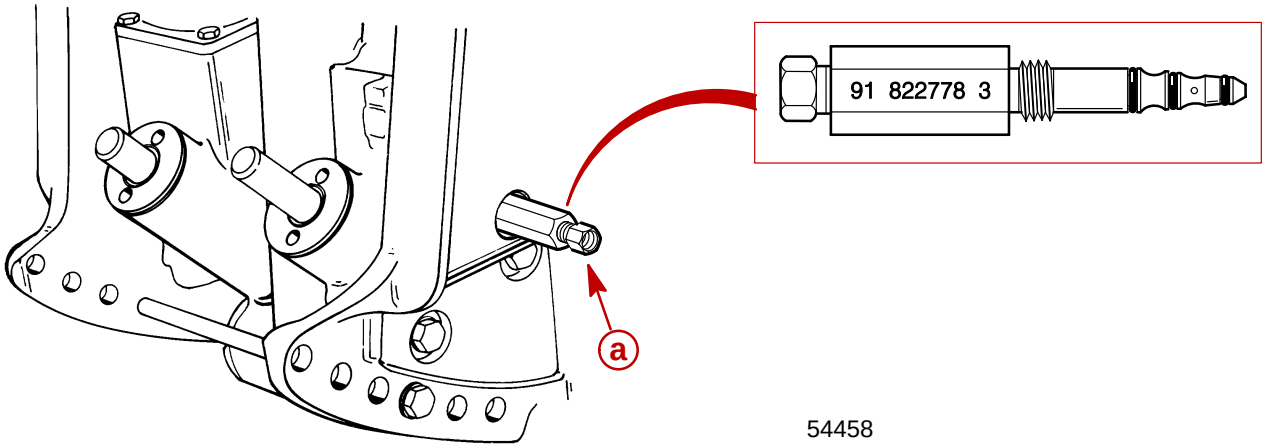

a - Test Adaptor (91-822778A3)

5. Thread hose from Test Gauge Kit (91-52915A6) into brass fitting on adaptor.

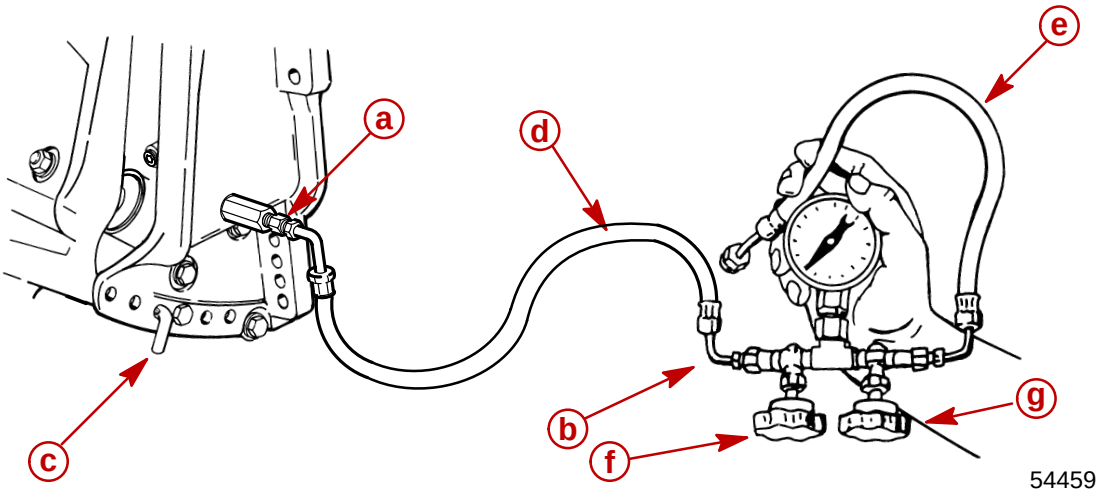

a - Brass Fitting
b - Test Gauge Assembly
c - Tilt Pin (Position in Hole Shown)
d - Hose
e - Hose (Not Used)
f - OPEN Valve
g - CLOSE Valve

6. Reinstall fill plug.
7. Disengage tilt lock lever.
8. Open valve (f) and close valve (g).
9. Run trim “DOWN”. Minimum pressure should be 500 P.S.I. (35 kg/cm^2).
10. Tilt outboard full “UP” and engage tilt lock lever.
11. Slowly remove “Fill” plug to bleed pressure.
12. Remove test gauge hose and adaptor.
13. Reinstall manual release valve and secure valve with circlip.
14. Retighten “Fill” plug.

NOTE: *If pressure is less than 500 PSI (35 kg/cm^2), troubleshoot system per instructions on Page 5B-15.*

Hydraulic Repair

TRIM ROD REMOVAL AND REPAIR

NOTE: *Power Trim does not have to be removed from outboard to remove trim rods.*

1. Tilt outboard to full “UP” position and engage tilt lock lever.
2. Slowly remove “Fill” plug to bleed reservoir pressure.
3. Turn Manual Release Valve 3 to 4 turns (counterclockwise) to bleed remaining pressure.
4. Remove trim rod cylinder caps.

NOTE: *Place a clean pan under trim system to catch fluid.*

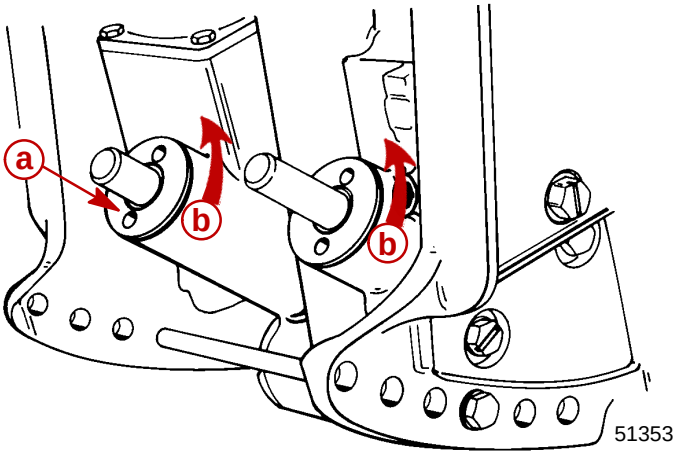

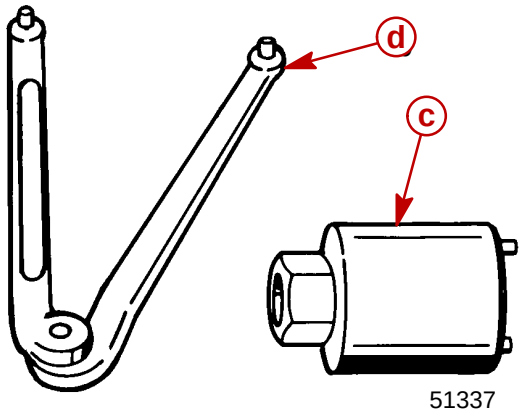

a - Trim Rod Cylinder Cap
b - Turn Counterclockwise to Remove
c - Removal Tool (91-44487A1)
d - Spanner Wrench (91-74951)

5. Install trim rod removal tool and pull trim rod from cylinder.

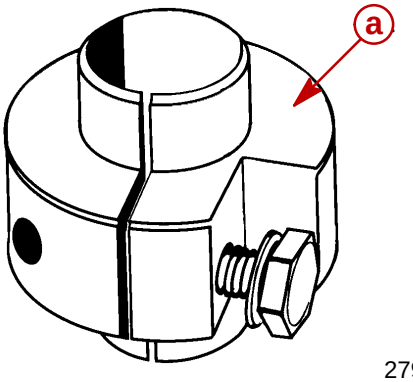

a - Trim Rod Removal Tool (91-44486A1)

CLEANING AND INSPECTION - TRIM RODS AND CAPS

⚠ CAUTION

Do not remove check valve (a). Check valve is preset to operate at a specific pressure. Removal and installation of check valve could result in improper operating pressure and possible system damage.

NOTE: *Check valve is in port side trim rod only.*

NOTE: *Certain models may have trim limit reducers installed on the trim rod to limit trim out angle. Each reducer limits the amount of total trim by 2°. A maximum of 5 reducers may be installed on each trim rod.*

1. Inspect check valve and check valve screen for debris; if debris cannot be removed, replace trim rod assembly. Clean trim rod with parts cleaner and dry with compressed air.

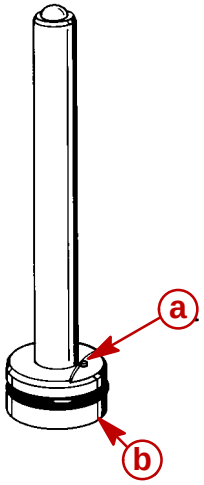

51352

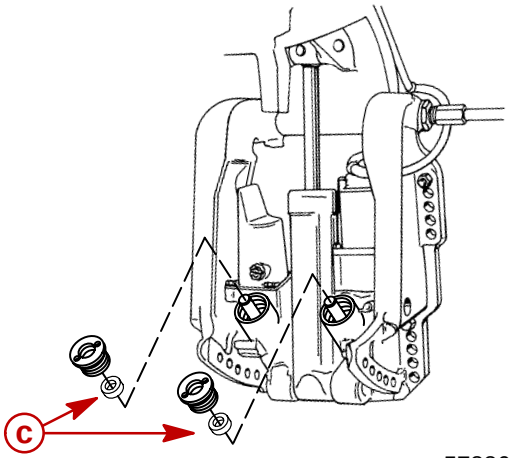

57886

a - Check Valve
b - Check Valve Screen
c - Trim Limit Reducers

Trim Rod End Cap Seal

1. Inspect trim cap end seal and replace if damaged or if seal does not keep trim rod clean.

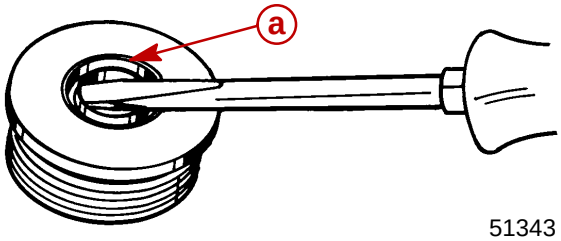

51343

a - Seal (remove as shown)

2. Install new seal with seal lip up.

TRIM ROD INSTALLATION

IMPORTANT: Components must be free of dirt and lint. Any debris in the system can cause system to malfunction.

NOTE: *Install trim rod with check valve in the port (left) cylinder.*

1. Apply Quicksilver Power Trim and Steering Fluid on all O-rings and seals before installation.

2. Install trim rods and caps. Use installation tool (91-44487A1) or spanner wrench (91-74951) to tighten caps securely.

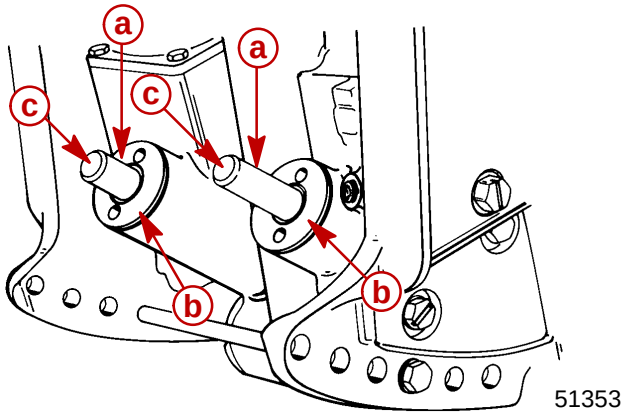

a - Trim Rods
b - Cylinder End Caps
c - Rod End Rollers (lubricate with Quicksilver Anti-Corrosion Grease or Special Lubricant 101)

Tilt Ram

REMOVAL - TILT ROD ASSEMBLY ONLY

NOTE: *Tilt Rod Assembly can be removed from cylinder without removing entire power trim system from outboard.*

TILT RAM COMPONENTS

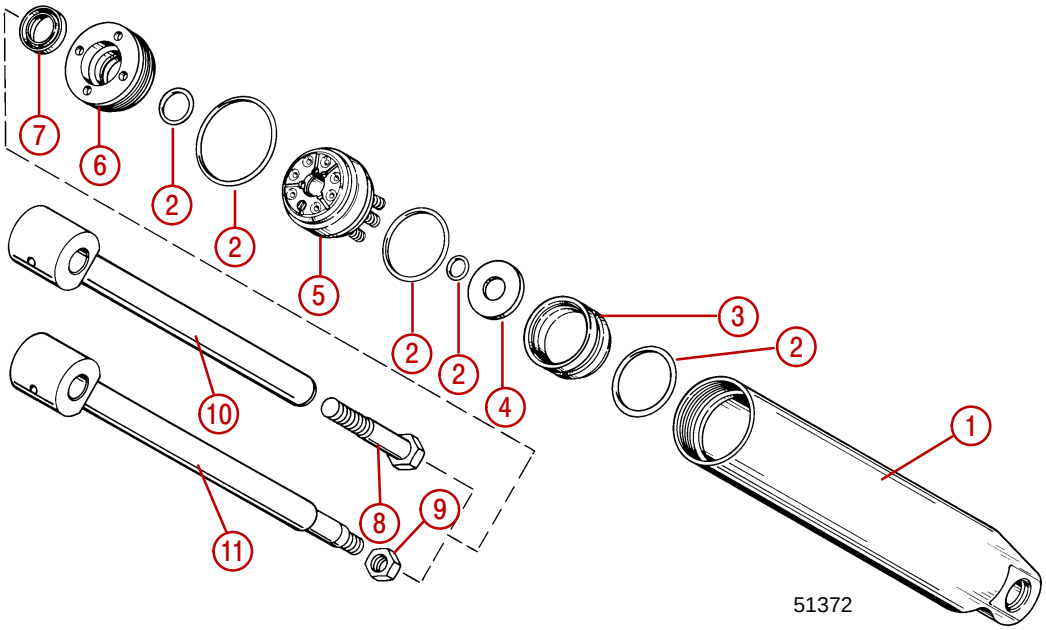

1 - Housing - Tilt Ram
2 - O-ring* (5)
3 - Memory Piston**
4 - Washer
5 - Piston Assembly
6 - End Cap
7 - Oil Seal
8 - Bolt (Design 1)
9 - Nut (Design 2)
10 - Tilt Rod (Design 1)
11 - Tilt Rod (Design 2)

*O-ring Repair Kit Available, P.N. 811607A1 (Includes item 7, Oil Seal)

**Memory piston (3) for tilt rods (10 and 11) are different and must be used with correct tilt rod/cylinder assembly. Memory piston for Design 1 tilt rod is flat, Design 2 is dished to clear nut and thread.

TILT RAM REMOVAL - POWER TRIM SYSTEM REMOVED FROM OUTBOARD

⚠ CAUTION

Insure trim system is depressurized prior to tilt ram removal.

1. Remove cross pin.
2. Remove lower swivel pin.

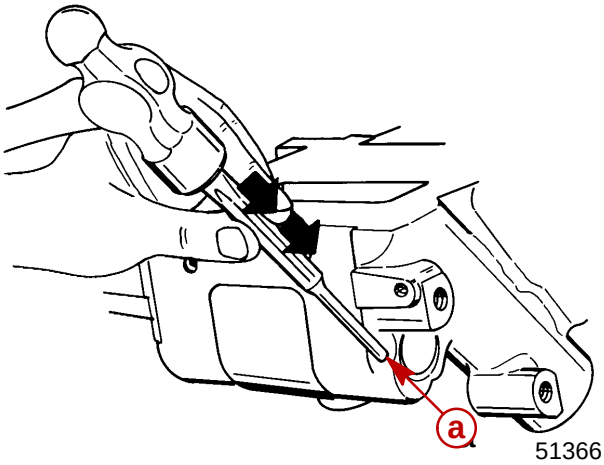

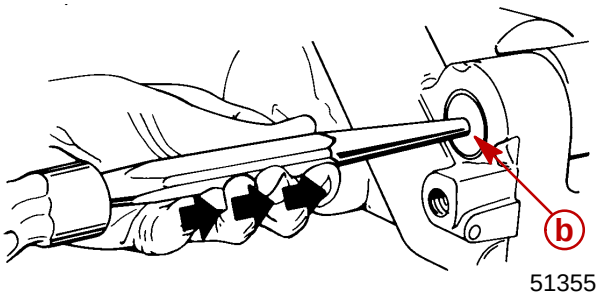

a - Cross Pin (Remove as shown)
b - Lower Swivel Pin (Remove as shown)

Disassembly

1. Secure tilt ram in a soft jawed vise. Remove tilt rod and cap.

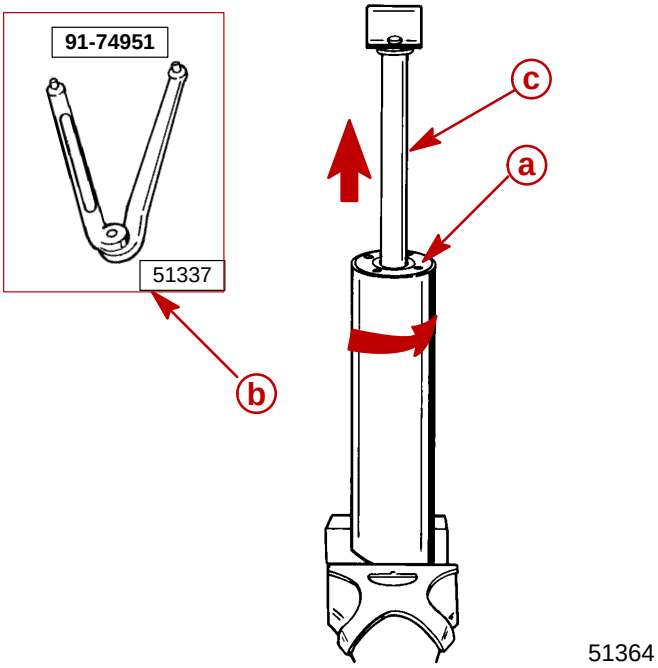

a - Cap (Turn Counterclockwise to Remove)
b - Spanner Wrench (91-74951)
c - Tilt Rod - Pull to Remove

2. Clamp tilt rod in a soft jawed vise. Remove bolt or nut as applicable to disassemble rod assembly. Remove O-ring.

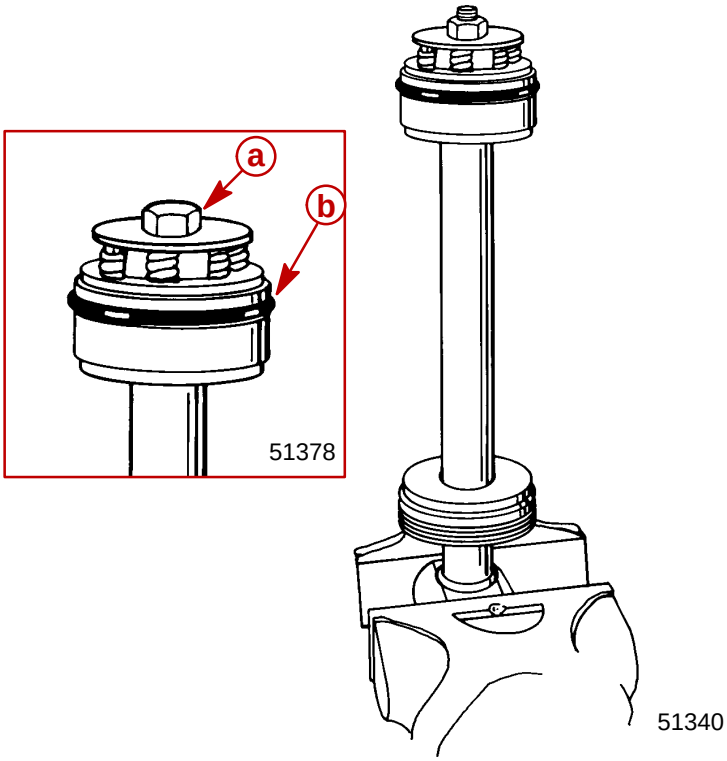

a - Bolt (Design 1) or Stud/Nut (Design 2)
b - O-Ring

IMPORTANT: Note Design 1 and 2 on page 5B-30. Design 1 tilt rod assembly replaces either tilt rod assembly. Either design will fit as a (replace) cylinder assembly complete.
Design 2 will NOT fit a cylinder originally using a Design 1 tilt rod assembly.
Memory Pistons for Design 1 and 2 differ also and must be used only on the cylinder the piston was removed from.

3. Remove washer, check valve assemblies, and piston.

NOTE: *Check valve held in by roll pin can be cleaned but not removed.*

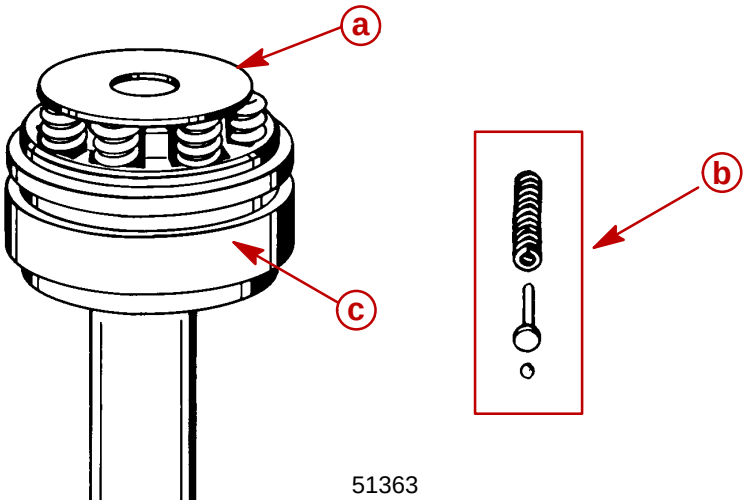

a - Washer
b - Check Valve Assembly (7)
c - Piston

4. Remove end cap from tilt rod.
5. Remove allen plug.

IMPORTANT: Remove plug from same side as holes in shaft.

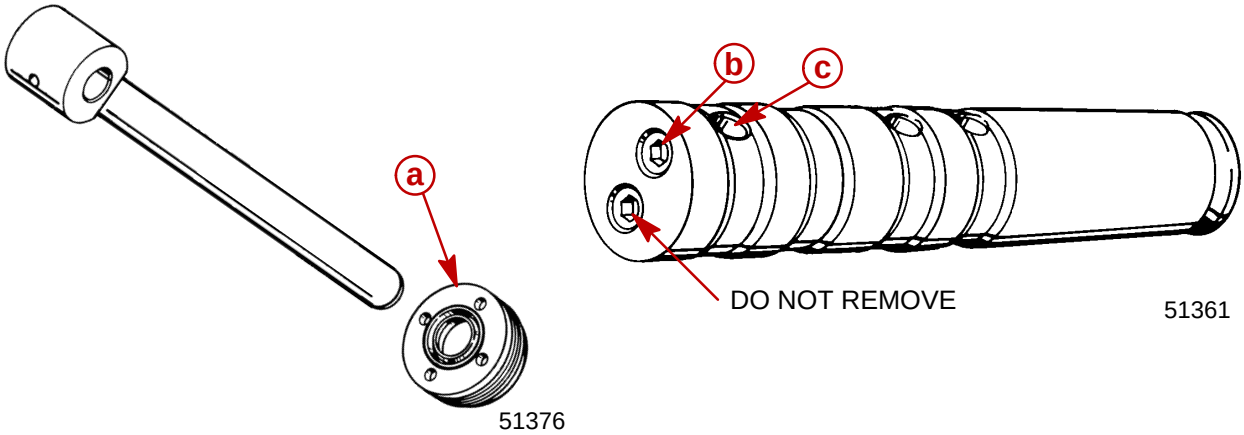

a - End Cap
b - Allen Plug
c - Hole In Shaft

6. Lubricate shaft with Quicksilver Power Trim and Steering Fluid. Insert shaft into cylinder.

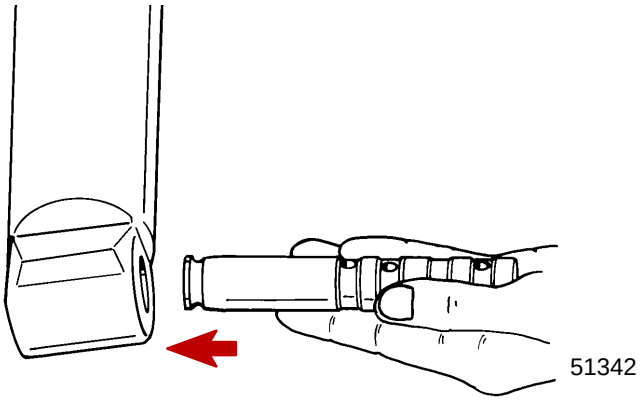

7. Tap shaft into cylinder until shaft is positioned as shown.

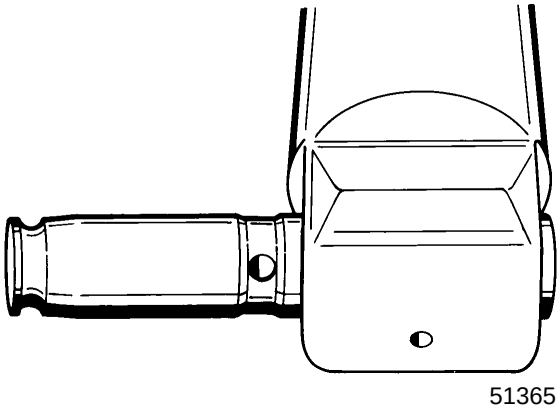

⚠ WARNING

Memory Piston Cup may be expelled at a high velocity when air pressure is applied. Failure to place cylinder as shown below could result in personal injury.

8. Place cylinder as shown. Hold down on cylinder and inject air into shaft opening.

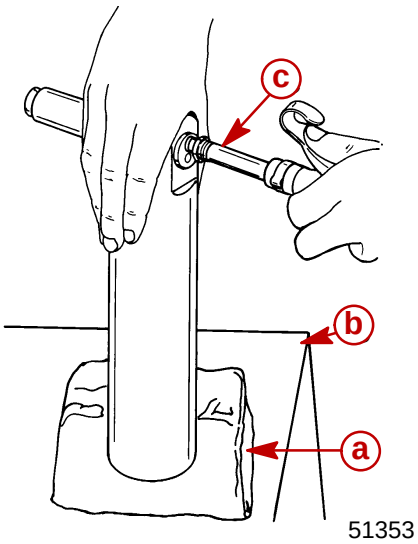

a - Shop Cloth
b - Solid Surface
c - Air Nozzle

9. Remove shaft after Memory Piston Cup has been expelled. Replace allen plug removed in Step 5 and tighten securely.

CLEANING AND INSPECTION

1. Inspect all internal parts for damage or wear. Clean and replace parts as necessary.
2. Inspect tilt rod for scratches. Replace scraper seal in rod end cap if tilt rod is scratched or worn.
3. Slight scratches or tool marks less than 0.005 in. (0.1 mm) deep in cylinder are acceptable.

Scraper Seal Replacement

1. Remove components from end cap.

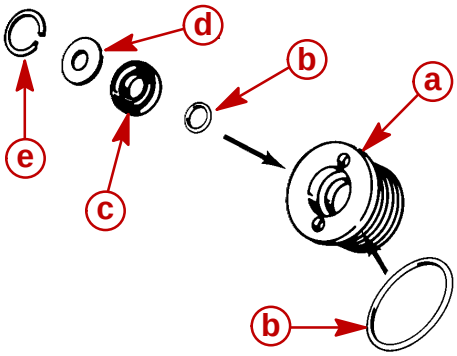

a - Cap
b - O-ring (2)
c - Scraper Seal
d - Washer
e - Retaining Ring

REASSEMBLY

IMPORTANT: Components must be clean for reassembly. Any debris in the system can cause the system to malfunction.

NOTE: *Refer to "Tilt Ram Components" for proper O-ring sizes.*

1. Apply Quicksilver Power Trim and Steering Fluid on O-rings prior to reassembly.
2. Install O-ring on Memory Piston Cup and install in cylinder.

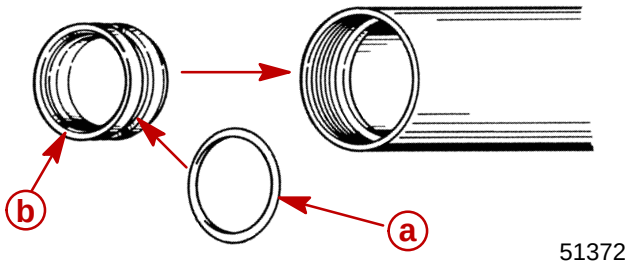

a - O-ring
b - Memory Piston Cup (Design 1 shown)

3. Assemble end cap.
4. Install end cap.

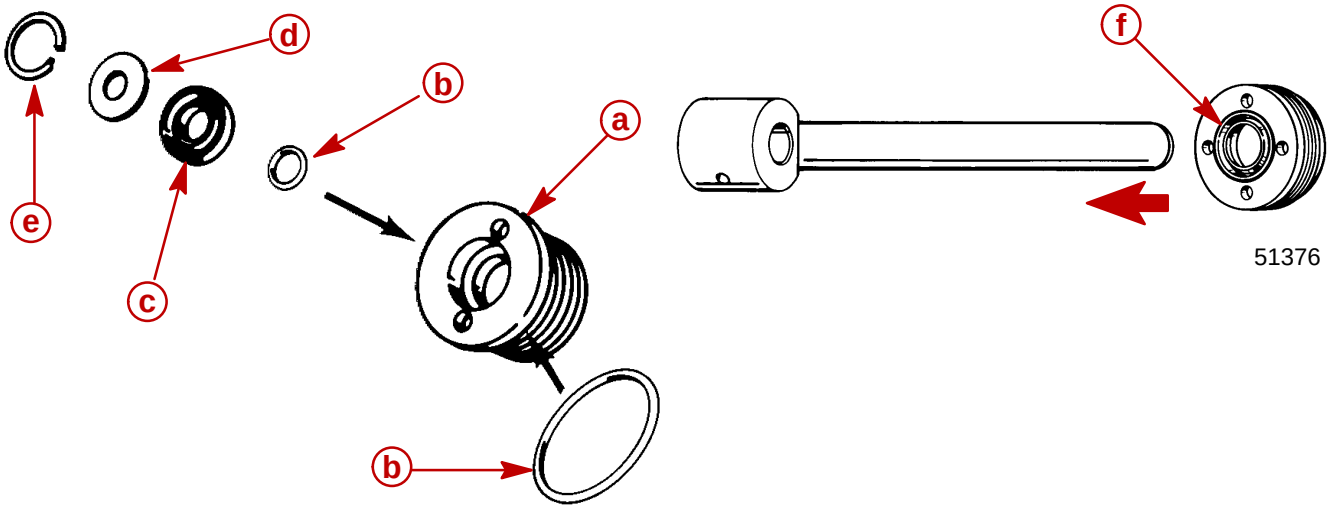

a - End Cap
b - O-ring (2)
c - Scraper seal
d - Washer
e - Retaining Ring
f - End Cap

5. Install components on rod.

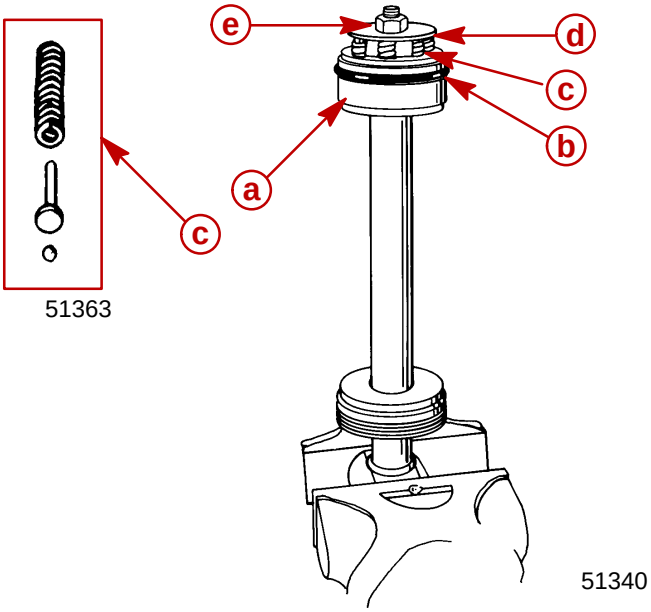

a - Piston
b - O-ring
c - Check Valve Assembly (7)
d - Washer
e - Bolt or Locknut. (Tighten securely)

6. Clamp cylinder in a soft jawed vise and install tilt rod assembly. Use spanner wrench and tighten end cap securely.

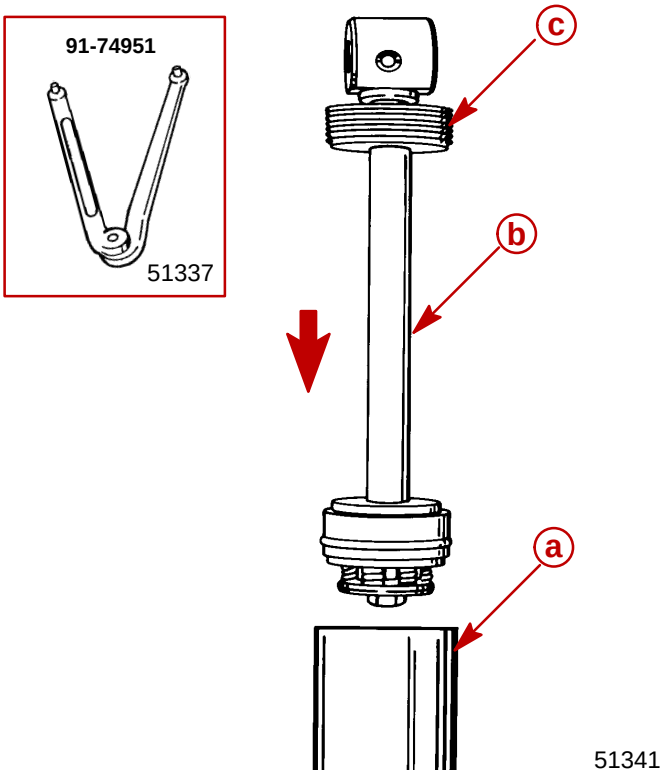

a - Cylinder
b - Tilt Rod Assembly
c - End Cap (Tighten Securely.) Use Spanner Wrench.

TILT RAM ASSEMBLY INSTALLATION

1. Lubricate alignment tool (91-11230) and shaft. Use Quicksilver Power Trim and Steering Fluid.

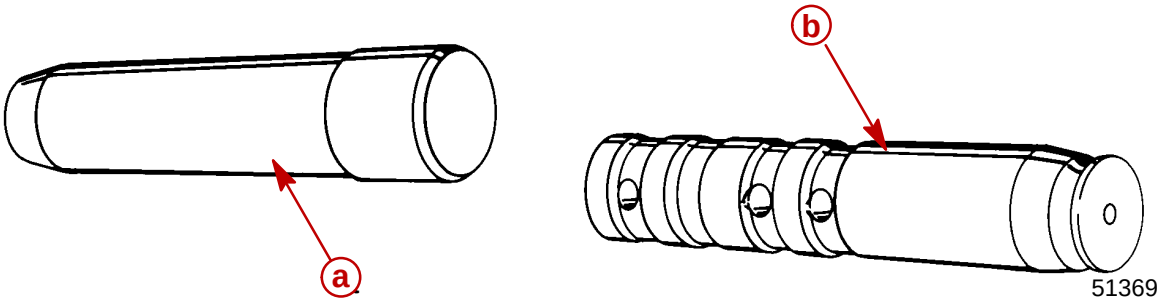

a - Alignment Tool (91-11230)
b - Shaft

2. Align tilt ram and housing using alignment tool.

3. Install shaft.

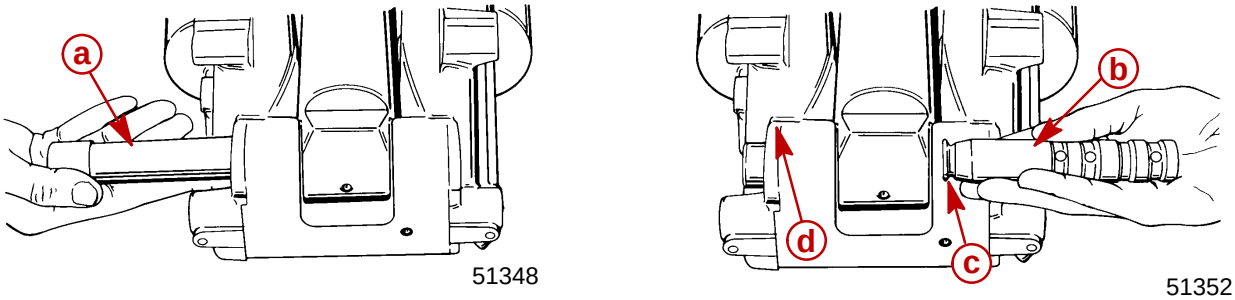

a - Alignment Tool (91-11230)
b - Shaft
c - Groove
d - Hole [Groove (c) will Align with this Hole]

4. Drive pin in until flush.

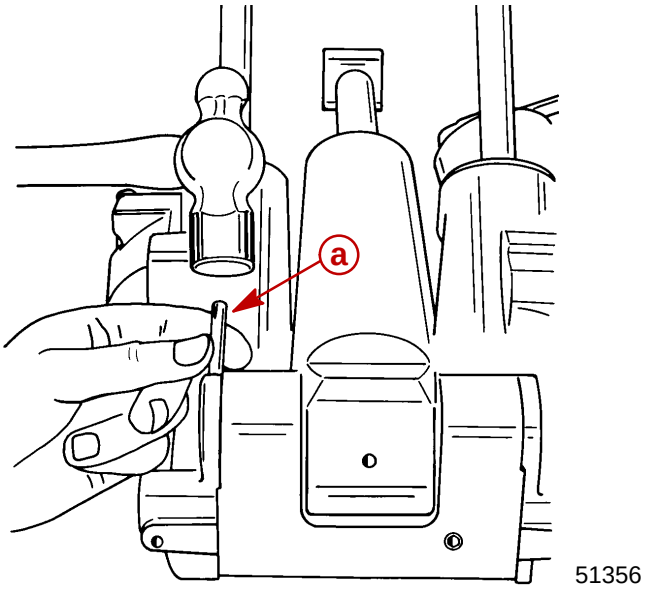

a - Pin (Drive Against Knurled End)

Motor and Electrical Tests/Repair

Trim Pump Motor Test

⚠ WARNING

Do not perform this test near flammable materials, as a spark may occur while making electrical connections.

1. Connect a 12 volt power supply to motor wires; one motor lead to POSITIVE (+) battery terminal and the other motor lead to the NEGATIVE (–) battery terminal. Motor should run. Reverse motor leads between battery terminals. Motor should run.

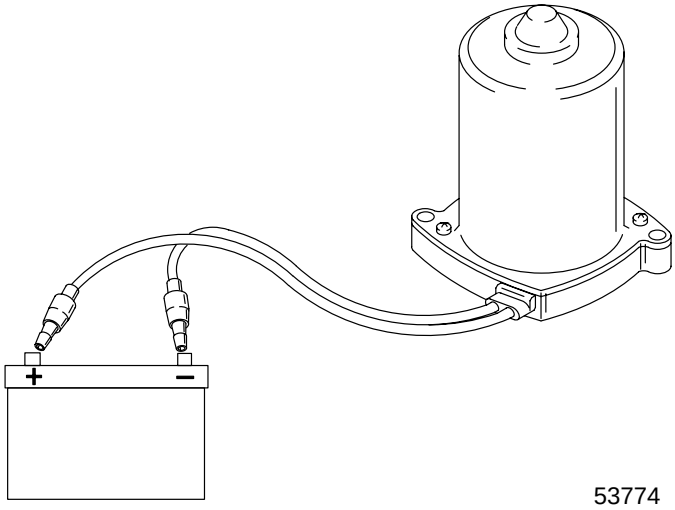

2. If motor does not run, disassemble and check components.

Motor Disassembly

1. Remove 2 screws.

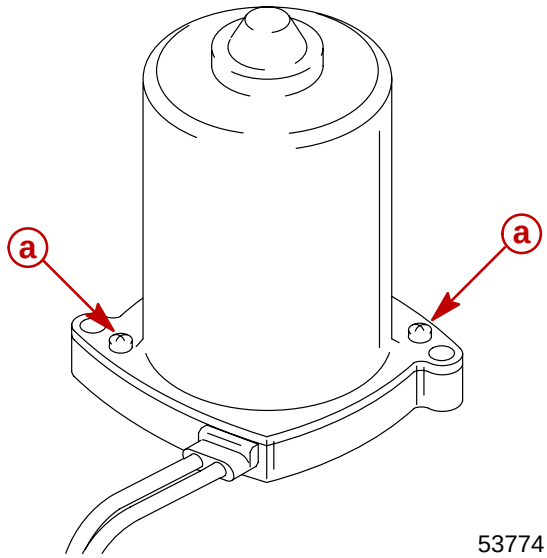

a - Screw (2)

2. Remove frame and armature from end cap. Use care not to drop armature.

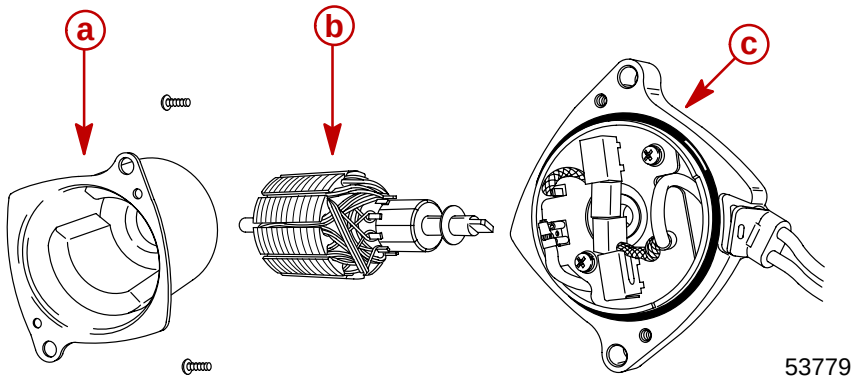

a - Frame
b - Armature
c - End Cap

Armature Tests

TEST FOR SHORTS

Check armature on a Growler per the Growler manufacturer's instructions. Replace armature if a short is indicated.

TEST FOR GROUND

1. Use an Ohmmeter (Rx1 scale). Connect one lead on armature shaft and other lead on commutator. If continuity is indicated, armature is grounded. Replace armature.

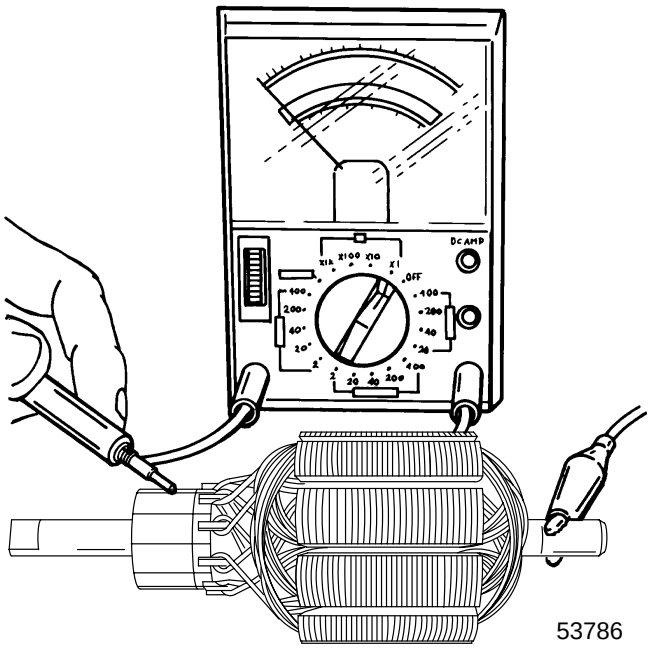

CHECKING AND CLEANING COMMUTATOR

1. If commutator is worn it may be turned on an armature conditioner or a lathe.
2. Clean commutator with “OO” sandpaper.

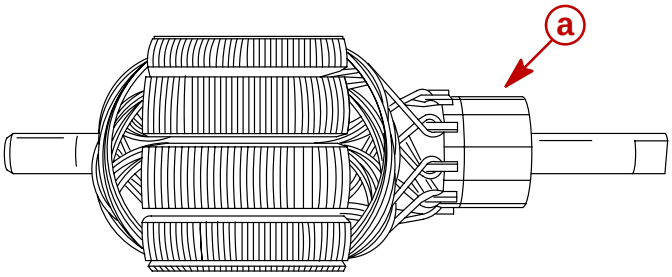

53775

a - Commutator

FIELD TESTS

IMPORTANT: Commutator end of armature must be installed in brushes when performing the following tests.

Ohmmeter Leads Between	Resistance (Ohms)	Scale Reading* (x_____)
BLUE and BLACK Motor Wires	0	(Rx1)
BLACK Motor Wire, and Frame (Motor Housing)	No Continuity	(Rx1)
BLUE Motor Wire and Frame	No Continuity	(Rx1)

*If specified readings are not obtained, check for:

- defective armature
- dirty or worn brushes
- dirty or worn commutator

If defective components are found, repair or replace component(s) and retest.

Motor Repair

REMOVAL

NOTE: *Power Trim System does not have to be removed from outboard to repair/replace motor.*

DISASSEMBLY

Refer to **“Motor Disassembly”** on page 5B-38 to disassemble motor from pump.

CLEANING AND INSPECTION

Inspect O-rings and replace if necessary. Carefully inspect power cord for cuts or tears which will allow water to enter motor. Replace cord if cut or torn. Clean, inspect, and test motor components. Refer to **"Brush Replacement"**, **"Armature Test"**, and **"Field Tests"** for inspection and test procedures.

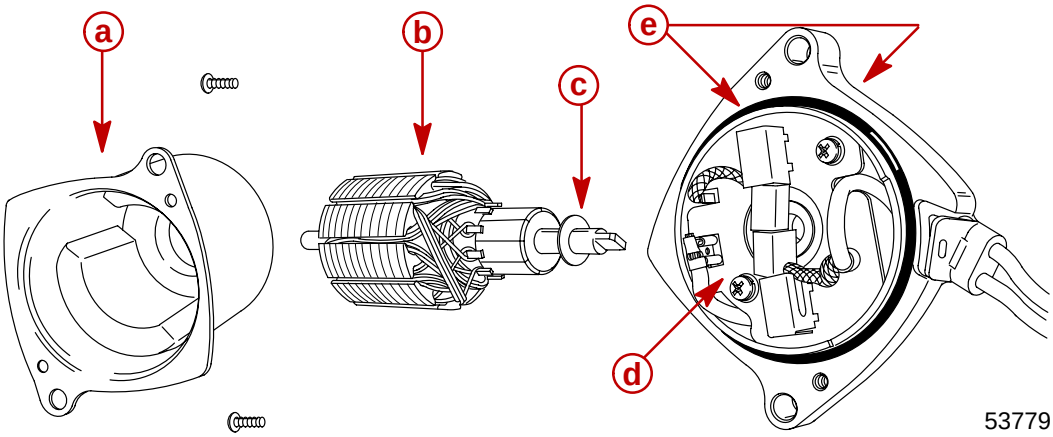

a - Frame
b - Armature
c - Shim
d - Brush Card Assembly
e - O-rings

BRUSH REPLACEMENT

1. Brush replacement is required if brushes are pitted, chipped, or if distance (a) between the brush pigtail and end of brush holder slot is 1/16 in. (1.6 mm) or less. Check distance with armature installed.

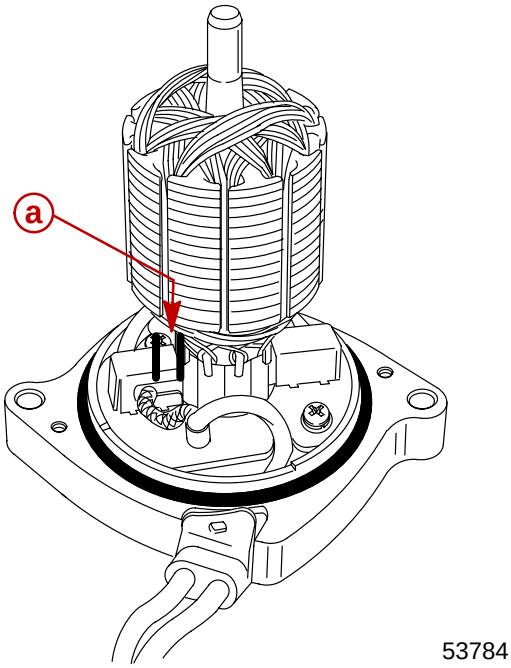

a - 1/16 in. (1.6 mm)

2. To replace brush card, disconnect spade terminal.
3. Cut crimped brush lead.
4. Remove 2 screws securing brush card to end cap.

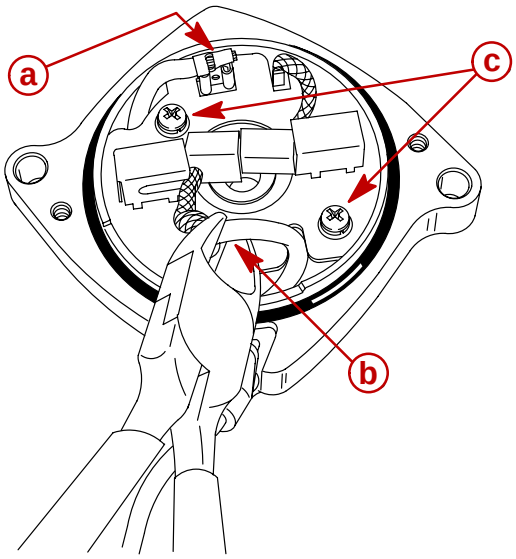

a - Spade Terminal
b - Crimped Brush Lead
c - Screws

5. Install new brush card (BRUSH and SEAL KIT 828714A1).
6. Crimp metal connector onto motor lead and new brush lead.
7. Connect spade connector motor lead to brush card connector.
8. Secure brush card to end cap with 2 screws and lockwashers.
9. Inspect O-ring for cuts and abraisions. Replace O-ring as required (BRUSH and SEAL KIT 828714A1).

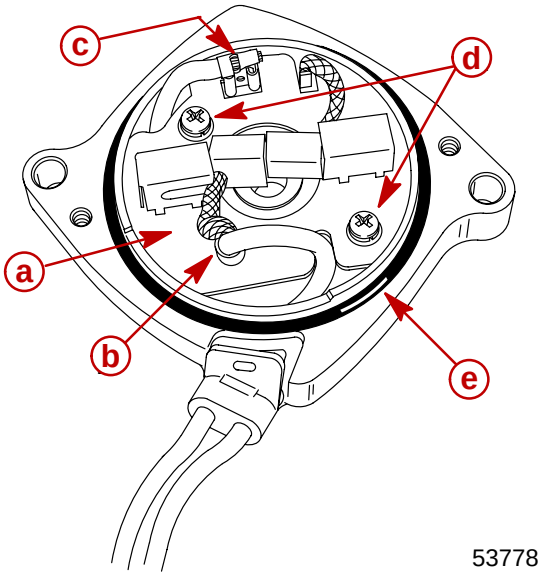

a - Brush Card
b - Metal Connector
c - Spade Connector
d - Screws and Lockwashers
e - O-ring

END CAP INSPECTION

1. Inspect seal and O-ring for cuts and abraisions. If replacement is required, install BRUSH and SEAL KIT 828714A1.
2. Inspect bushing for wear. If bushing appears to be excessively worn – grooves, scratches, etc. – install END FRAME ASSEMBLY (COMPLETE) 828715A1.

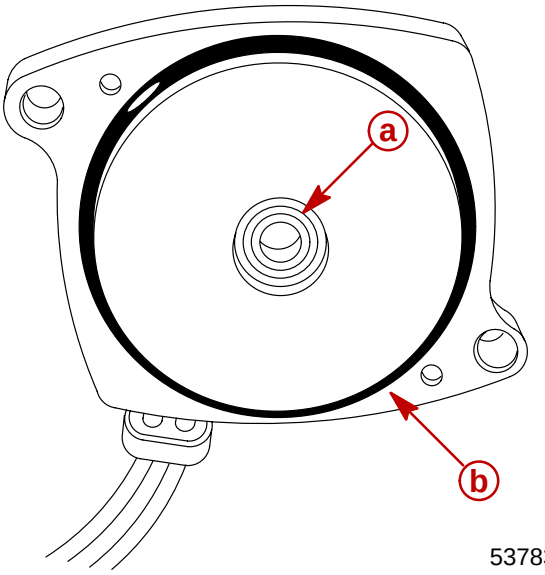

53783

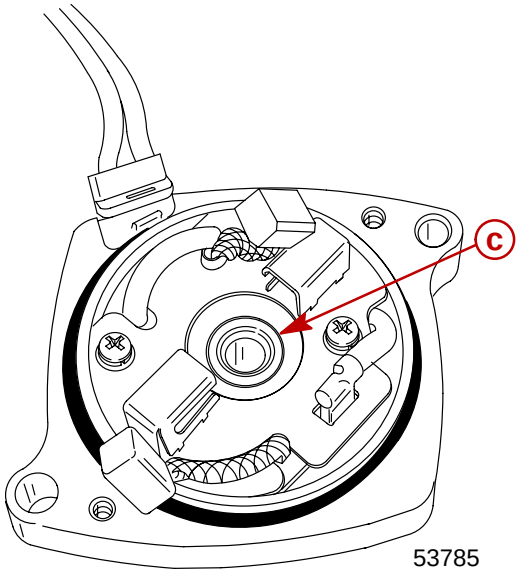

53785

a - Seal (Apply 2-4-C w/Teflon to seal lips)
b - O-ring
c - Bushing

3. If trim motor is overheated, a thermoswitch located under brush card will open. Normally, this switch will reset itself within 1 minute.

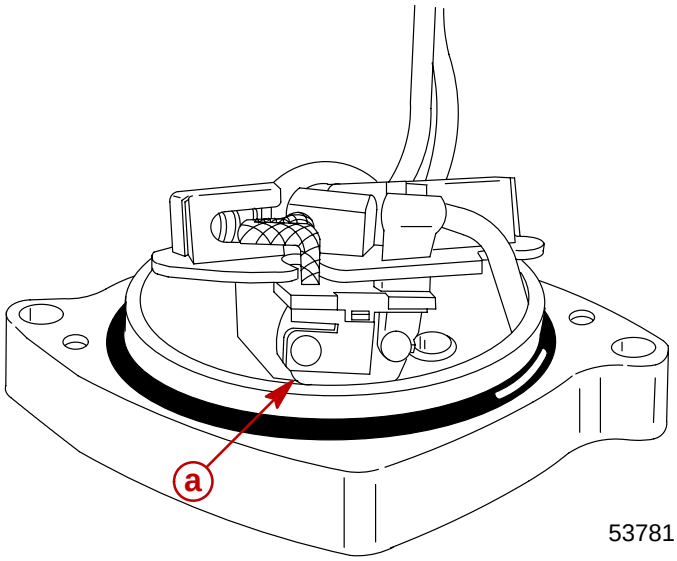

53781

a - Thermoswitch

Reassembly

IMPORTANT: Components must be clean. Any debris in power trim system can cause system to malfunction.

1. Install armature into end cap/brush card assembly.

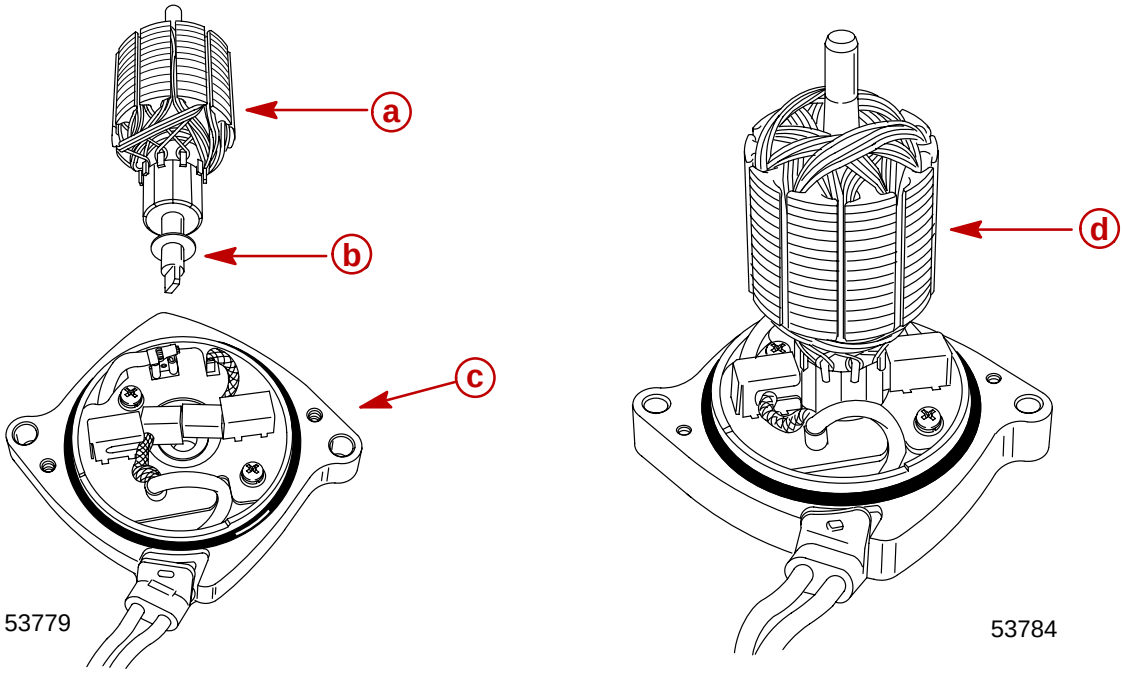

a - Armature
b - Shim
c - End Cap Assembly
d - Armature (Spread brushes to install armature into end cap)

2. Install O-rings in end cap.

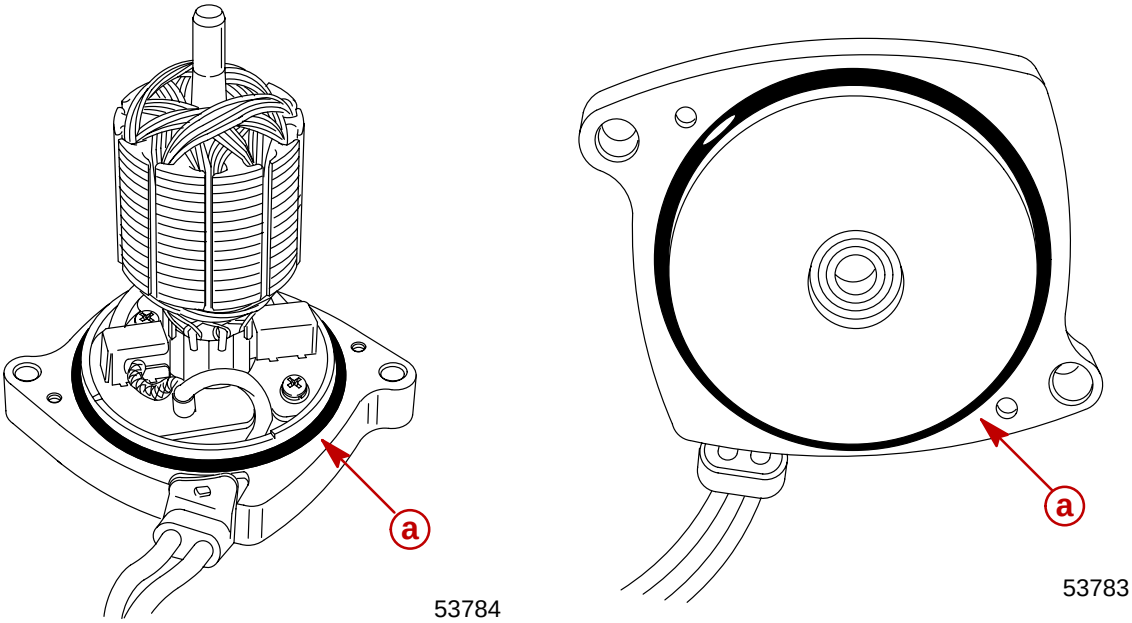

a - O-rings

IMPORTANT: Attach Vise Grip® pliers to armature shaft before installing frame assembly. The Vise Grip® pliers will prevent the armature from being drawn out of the brush card assembly by the frame magnets while installing the frame assembly.

3. Install Vise Grip® pliers on armature shaft.
4. Carefully install frame assembly over armature.
5. Position harness retainer hole over tab in end cap.
6. Secure frame assembly to end cap with 2 screws.

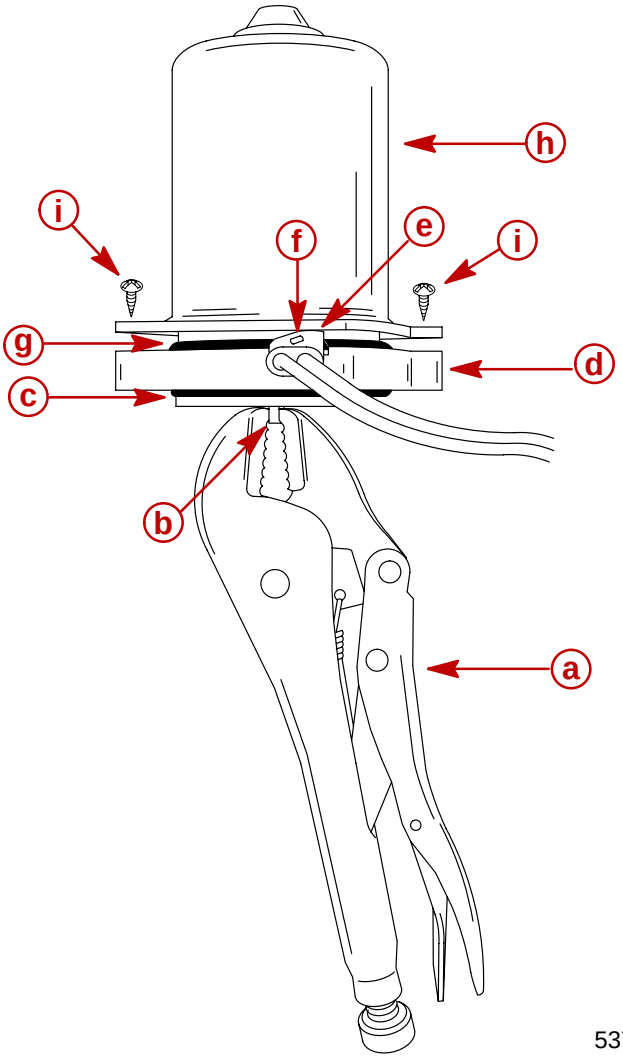

a - Vise Grip® Pliers
b - Armature Shaft
c - O-ring
d - End Cap
e - Harness Retainer
f - Retainer Hole
g - O-ring
h - Frame Assembly
i - Screws

Reassembly - Motor and Pump

NOTE: *Drive shaft is a loose part and may fall out of position.*

1. Install pump onto power trim manifold. Insure O-rings are in proper locations. Secure with two (2) screws. Torque screws to 80 lb. in. (9 N·m).

IMPORTANT: Install pump with location flat facing towards starboard transom bracket.

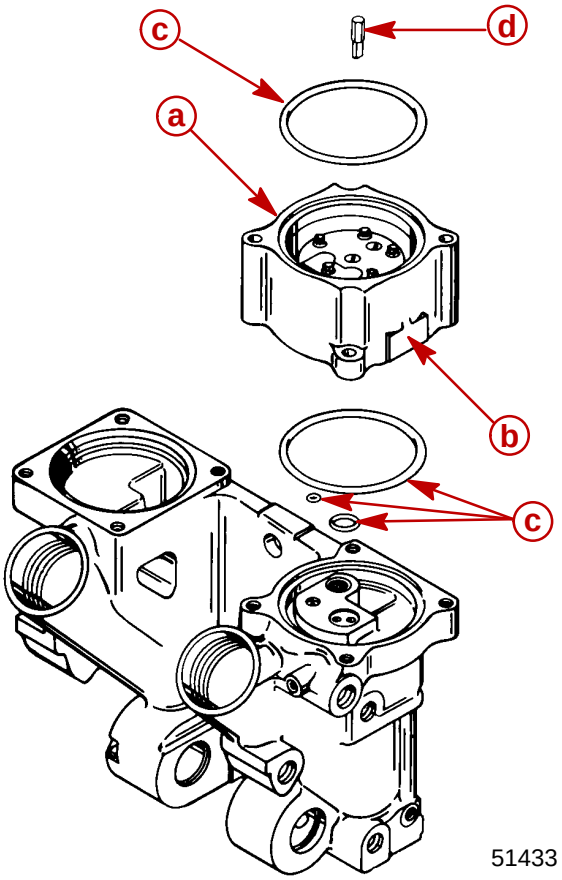

a - Pump (Flat Towards Starboard Transom Bracket)
b - Flat - Faces Starboard Transom Bracket)
c - O-rings (4)
d - Drive Shaft (Install in **Center** Hole in Pump)

2. Fill pump with Quicksilver Power Trim and Steering Fluid prior to installing motor.
3. Install motor, secure with two (2) screws. Route wiring; refer to Wiring Diagrams in this service manual.

NOTE: *Verify motor and drive shaft are aligned.*

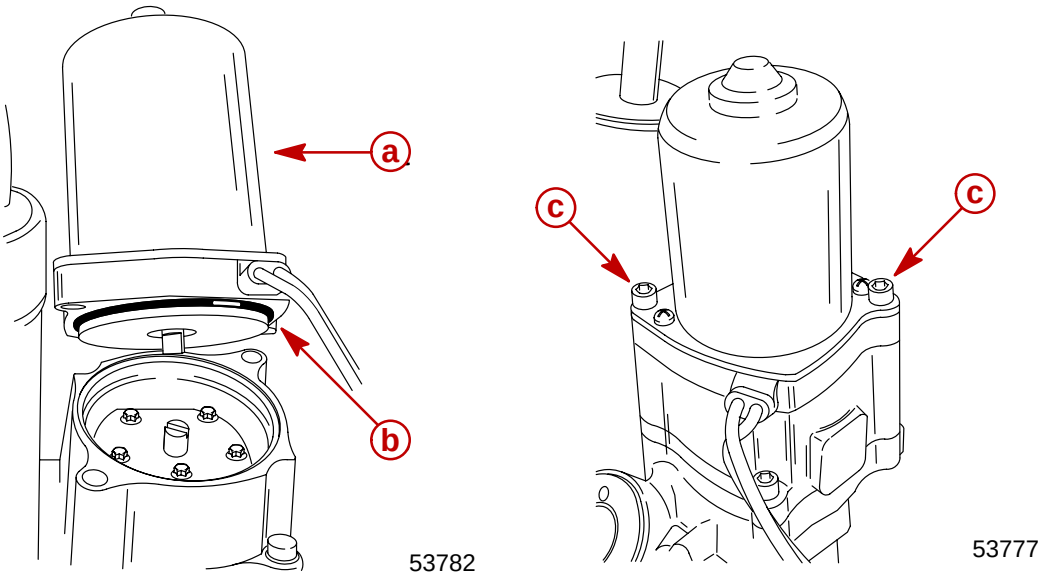

a - Motor
b - O-ring
c - Screw (2) Tighten securely.

4. Complete reassembly of Power Trim System as outlined in **"Installation"** on page 5B-21.

Priming Power Trim System

1. Fill system with Quicksilver Power Trim and Steering Fluid or Automatic Transmission Fluid (ATF) Type F,FA, Dexron II or Dexron III. Refer to **"Fill, Check, and Purge"** on page 5B-10.

IMPORTANT: Run Trim System in short "jogs" until pump motor primes and trim system moves. If trim motor is run without priming pump, drive shaft failure could result.

Trim Sender Test

1. Check trim sender BLACK lead for proper ground.
2. Trim outboard to full "DOWN" position.
3. Place ignition switch to "ON" position.
4. Disconnect BRN/WHT trim sender wire from trim sender harness.
5. Connect Ohmmeter (Rx1 scale) leads between outboard ground and Point 1 (trim sender end).
6. Depress "UP" button. Ohmmeter needle should move as the outboard is trimmed up. If needle does not move, trim sender is defective.

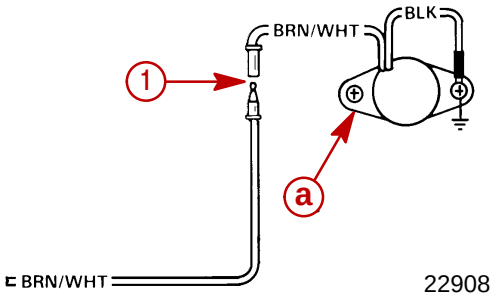

a - Trim sender

Trim Indicator Gauge Needle Adjustment

1. Turn ignition key to “RUN” position.
2. Tilt outboard to full “IN” position. Needle of trim indicator gauge should be in full “IN” position.
3. If not, tilt outboard to full “OUT” position to gain access to trim sender and engage tilt lock lever.
4. Loosen trim sender screws and reposition trim sender.
5. Tighten trim sender screws.

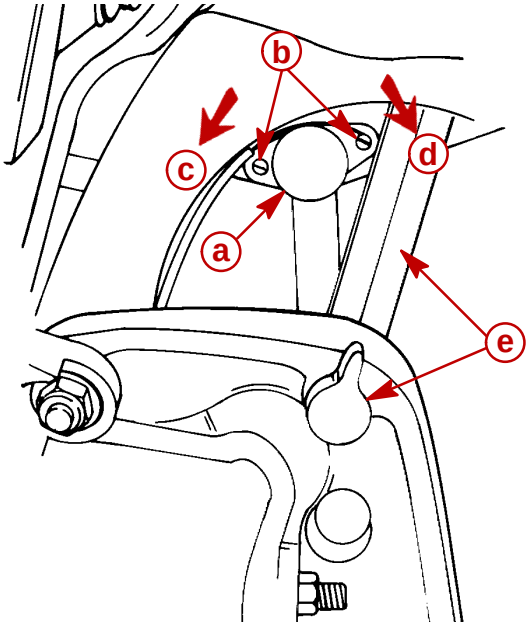

22744

a - Trim Sender
b - Screws, Loosen to Rotate Sender
c - Turn Sender **Counterclockwise** to raise needle reading
d - Turn Sender **Clockwise** to Lower Needle Reading
e - Tilt lock lever

Trim Indicator Wiring Diagrams

Wiring Diagram - For boats equipped with Quicksilver Commander Series side mount remote control.

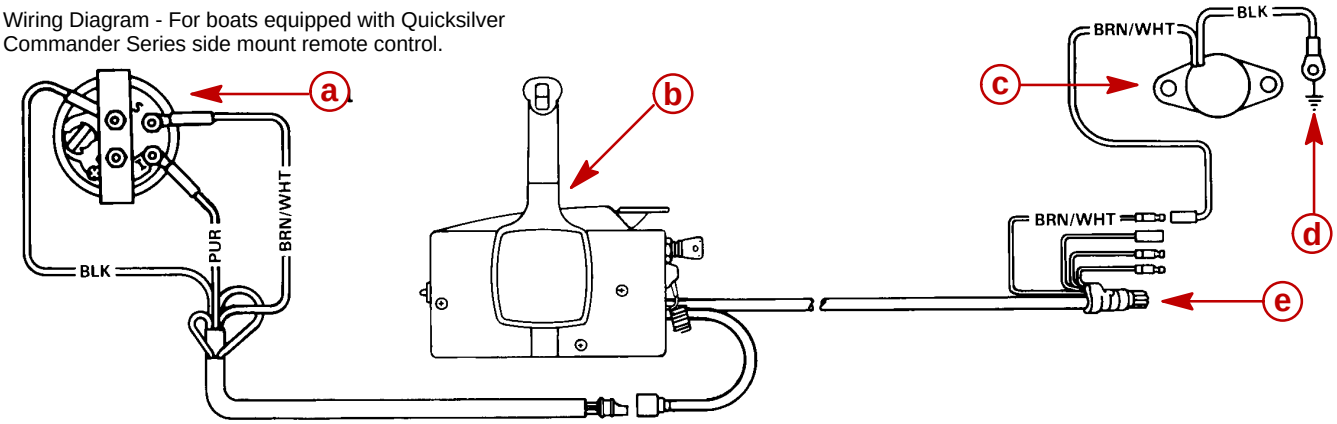

Wiring Diagram - For boats equipped with Quicksilver Ignition/Choke and Main Harness Assembly.

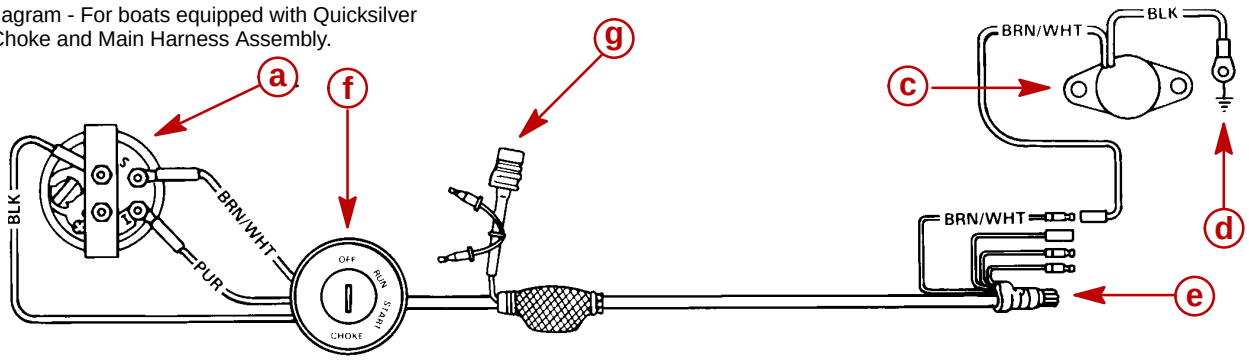

22908

- **a** - Trim Indicator
- **b** - Remote Control
- **c** - Trim Sender
- **d** - Engine Ground
- **e** - To Engine
- **f** - Ignition Switch
- **g** - Power Trim Harness