Welcome Aboard!

GB

Proper care and regular maintenance is an important part in keeping your Mercury Product operating at peak efficiency for maximum performance and economy. The enclosed Owner's Registration Card is your key to trouble-free family fun. Refer to your «Operation and Maintenance Manual» for full details of your warranty coverage.

F Bienvenue à bord!

Il convient de prendre soin de son matériel Mercury et de l'entretenir régulièrement afin de préserver des performaces et un rendement optimaux.

La carte d'inscription du propriétion du propriétaire ci-include vous garanitit des loisirs en famille sans soucis. Reportez-vous au manuel d'utilisation et de maintenance pour obtenir de plus amples informations sur votre garantie.

NL Welkom aan boord!

Een juiste behandeling en regelmatig onderhoud zijn een belangrijk gegeven om uw Mercury product optimaal te laten fungeren voor maximum prestaties en economisch gebruik. De bijgesloten eigenaars Registratiekaart is de sleutel tot probleemloos vaarplezier. Raadpleeg uw «Operation and Maintenance Manual» voor een volledige beschrijving van gebruik en onderhoud.

I Benvenuti a bordo!

Un uso appropriato ed una manutenzione regolare sono garanzia di perfetta efficienza del vostro prodotto Mercury per ottenere il massimo rendimento con consumi ottimali. L'accluso tagliando di registrazione è la chiave per risolvere i problemi tecnici ove si presentassero. Consultate il manuale d'uso e manutenzione per tutti i dettagli sulla garanzia.

D Willkommen an Bord!

Sorgfältige Behandlung und regelmäßiger Kundendienst sind eine wichtige Voraussetzung, um die dauernde Funktionstüchtigkeit Ihres Mercury Motors zu erhalten, um seine Maximalleistung und Wirtschaftlichkeit nutzen zu können. Die beigefügte Eigner-Registrierkarte ist Ihr Schlüssel für den ungetrübten Familienspaß. Bitte informieren sie sich anhand der Bedienuingsanleitung und Kundendienst- und Gewährlestungsinformation über die Einzelheiten der Garantiebestimmungen.

E Bienvenido a bordo!

El cuidado y mantenimiento adecuado de su motor Mercury es de gran importancia, si desea conseguir las mejores prestaciones y por tanto, el máximo rendimiento y menor consumo de combustible. La Tarjeta de Venta adjunta, es su seguro de diversión familiar sin problemas. Para más información sobre la cobertura de la garantía, consulte el «Manual de Uso y Mantenimiento».

P Bem-vindo a bordo!

Para que o seu motor Mercury tenha uma boa eficiência, um maior rendimento e economia, são necessários cuidados adequados e uma manutenção regular. O cartão de registro de propriedade é anexo é a sua chave para o divertimento familiar liver de problemos. Queira consultar o seu «Manual de Operação e Manutenção» que lhe fornece todos os detalhes sobre a garantia do seu motor.

DK Velkommen ombord!

Omhyggelig og regelmæssig pleje er en vigtig ting, for at De kan få det bedste ud af Deres Mercury produkt. Vedlagte registreringskort er Deres nøgle til problemfri familie sejlads. Se nærmere oplysninger om reklamationsdækning i instruktionsbogen.

N Velkommen ombord!

God behandling og godt vedlikehold er en forutsetning for at din Mercury-motor gir deg topp ytelse og best mulig økonomisk drift. Vedlagte registreringskort er ditt dokument som viser at du har krav på rett behandling etter kjøpsloven.

S Välkommen ombord!

Regelbundet underhåll och skötsel är av största betydelse för att din Mercury-Produkt skall fungera effektivt och felfritt. Bifogat registreringskort är ditt leveransservicebevis och skall vara ifylit för att gälla.

SF Astu laivaan!

Mahdollisimman hyvän suorituskyvyn ja polttoainetalouden saavuttamiseksi moottorin oikea hoito jo määräaikaishuollot ovat tärkeä osa moottorisi hyvinvointia. Lue huolellisesti moottorisi käyttö- ja huolto-ohjekirja. Kirjasta löydät ohjeet moottorin hoitoon ja huoltoon. Oheisessa taskussa on moottorisi takuukortti joka on avain huolettomaan veneilyyn.

GR ΚΑΛΩΣ ΗΛΘΑΤΕ

Η κατάλληλη φροντίδα και κανονική συντήρηση είναι ένα σημαντικό τμήμα στη διατήρηση του Προϊόντος της Mercury, ώστε αυτί να λειτουργεί με τη μέγιστη αποτελεσματικότητα για τη μέγιστη απόδοση και οικονομία. Η εσώκλειστη Κάρτα Πιστοποίησης Κατόχου είναι το κλειδί σας για οικογενειακή διασκέδαση χωρίς προβλήματα. Αναφερθείτε το "Εγχειρίδιο Συντήρησης και Λειτουργίας" για πλήρης λεπτομέρειες όσον αφορά την κάλυψη της εγγύησης.

90-10201V30 402

200 • 225 Optimax

© 2002, Mercury Marine

MARINE POWER

www.marinepower.com

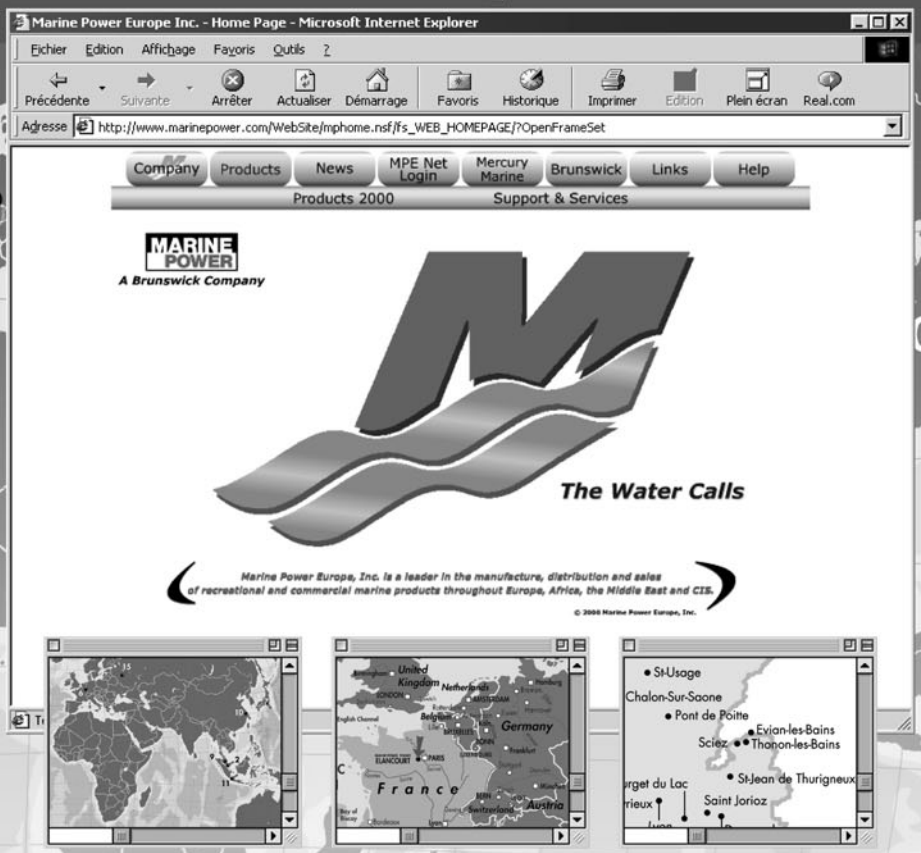

GB — Details of your nearest dealer can be found out on www.marinepower.com where country maps and full contact information are displayed.

F — Vous trouverez tous les détails concernant notre réseau de concessionnaires sur www.marinepower.com

I — Potrete trovare tutte le informazioni riguardanti la rete di vendita e assistenza scegliendo il Concessionario/Officina Autorizzata a Voi più vicini sul sito www.marinepower.com

E — Para localizar con más detalle a su distribuidor más cercano, contacte con www.marinepower.com, y busque toda la información necesaria.

P — Consulte na página web www.marinepower.com, os dados mais completos de contacto e a localização do seu concessionário mais próximo com a ajuda de mapas dos diferentes países.

GR — Λεπτομέριες για τον κοντινότερο εξουσιοδοτημένο αντιπρόσωπο, μπορείτε να βρείτε στο www.marinepower.com, όπου υπάρχουν χάρτες και πληροφορίες.

D — Einzelheiten Ihren lokalen Händler betreffend, finden Sie unter: www.marinepower.com. Dort lassen sich auch Landkarten und vollständige Kontaktinformationen einsehen.

NL — Gegevens betreffende de dichtstbijzijnde dealer kunt u terugvinden op www.marinepower.com waar landkaarten en contactadressen vermeld staan.

S — Uppgifter om närmaste återförsäljare med kontaktinformation och landskartor hittar du på www.marinepower.com

N — Informasjon om din nærmeste forhandler finner du på www.marinepower.com. Her kan du finne Norgeskart og detaljer om forhandleren.

DK — Oplysninger om din nærmeste forhandler kan findes på www.marinepower.com hvor landkort og fuld kontaktadresse vises.

SF — Tietoja lähimmästä jälleenmyyjästäsi löydät internet osoitteesta www.marinepower.com , sivuilta löytyvät maiden kartat ja jälleenmyyjien yhteystiedot.

RUS — Подробности о ваших ближайших дилерах могут быть найдены в Интернете на сайте www.marinepower.com, где представлены карты страны и информация для контактов.

TU — En yakın bayinizin detayları www.marinepower.com adresinde ülke haritaları ve tam irtibat bilgileri ile birlikte bulunabilir.

PL — Szczegóły dotyczące Twojego najbliższego dealera można odszukać na stronie HYPERLINK http://www.marinepower.com www.marinepower.com gdzie przedstawiona jest mapa kraju wraz z pełnymi danymi oraz kontaktem.

882846

MARINE POWER

www.marinepower.com

11

GB — Is your engine properly registered for warranty purpose? Please check on www.marinepower.com. If necessary, please contact your local dealer.

F — Votre moteur est-il correctement enregistré pour bénéficier de la garantie Marine Power? Vous pouvez le vérifier sur www.marinepower.com. En cas de besoin, veuillez contacter votre concessionnaire.

I — La garanzia del Vostro motore è stata registrata? Potete controllate sul sito www.marinepower.com. Se neccessario contattate il Vostro Concessionario.

E — ¿Está su motor cubierto por la garantía? Compruébelo en www.marinepower.com. Si es necesario, contacte con su concesionario más próximo.

P — O seu motor está registado adequadamente para os efeitos de garantia? Por favor, comprove-o na página web www.marinepower.com. Se for necessário, não duvide em contactar com o concessionário mais próximo.

GR — Ελέγξτε εάν ο κινητήρας είναι εγγεγραμμένος σωστά στο www.marinepower.com. Αν χρειαστεί επικοινωνήστε με τον τοπικό αντιπρόσωπο.

D — Ist Ihr Motor sachgerecht zu Garantiezwecken registriert? Bitte konsultieren Sie: www.marinepower.com. Bei Bedarf, wenden Sie sich bitte an Ihren Händler vor Ort !

NL — Is uw motor correct geregistreerd voor garantie? Kijk het na op www.marinepower.com. Contacteer uw dealer indien nodig.

S — Är din motor garantiregistrerad? Kontrollera på www.marinepower.com. Kontakta din återförsäljare om så är nödvändigt.

N — Er din motor riktig registrert for garanti? Vennligst sjekk på www.marinepower.com. Hvis nødvendig, kontakt din lokale forhandler.

DK — Er din motor registreret af hensyn til garantien? Check venligst på www.marinepower.com. Hvis nødvendigt kontakt din lokale forhandler.

SF — Onko moottorisi rekisteröity takuuta varten ? Voit tarkistaa asian internet osoitteesta www.marinepower.com. Jos tarpeellista, ota yhteys paikalliseen jälleenmyyjään.

RUS — Правильно ли зарегистрирован ваш двигатель относительно гарантийных обязательств? Проверьте, пожалуйста, это в Интернете на сайте www.marinepower.com. При необходимости свяжитесь, ложалуйста, с вашим дилером.

TU — Motorunuzun garanti kaydı doğru olarak yapıldı mı? Lütfen www.marinepower.com adresinden kontrol ediniz. Gerekli ise, yerel bayinizle irtibat kurunuz.

PL — Czy Twój silnik został właściwie zarejestrowany dla celów gwarancyjnych? Sprawdź na stronie HYPERLINK http://www.marinepower.com www.marinepower.com Jeśli istnieje taka potrzeba skontaktuj się z Twoim dealerem.

882846

If the outboard motor's serial number plate contains the CE mark in the lower left–hand corner, the following statement applies:

This outboard motor manufactured by Mercury Marine, Fond du Lac, Wisconsin, USA or Marine Power Europe Inc. Park Industrial, de Petit–Rechain, Belgium complies with the requirements of the following directives and standards, as amended:

Recreational Craft Directive:	94/25/EC; std ISO 8665, ISO 11547
Machinery Directive:	98/37/EC
EMC Directives:	89/336/EC; std. EN50081–1, SAE J551 (CISPR Pub. 12). EN 50082–1, IEC 61000 PT4–2, IEC 61000 PT4–3,

Patrick C. Mackey

President, Mercury Marine, Fond du Lac, USA
European Regulations Contact:
Product Environmental Engineering Department, Mercury Marine,
Fond du Lac, WI USA

oa

TABLE OF CONTENTS

Warranty Information

Transfer Of Warranty 2
Warranty Registration
United States and Canada 2
Outside the United States and Canada 2
Mercury Marine Two Years Limited Warranty (Europe) 3
Mercury Marine ONE Year Limited Warranty
(Confederation of Independent States, Middle– East, Africa) 4
3 Year Limited Warranty Against Corrosion Failure 5
Warranty Coverage And Exclusions 6

General Information

Boater's Responsibilities 7
Before Operating Your Outboard 7
Boat Horsepower Capacity 7
High-speed And High-performance Boat Operation 7
Outboard Remote Control Models 7
Remote Steering Notice 7
Lanyard Stop Switch 7
Protecting People In The Water 8
Passenger Safety Message - Pontoon Boats And Deck Boats 8
Wave And Wake Jumping 8
Impact With Underwater Hazards 9
Exhaust Emissions 9
Selecting Accessories For Your Outboard 10
Safe Boating Suggestions 10
Recording Serial Number 10
Specifications 10
Component Identification 11

Installation

Installing Outboard 11
Propeller Selection 11

Transporting

Trailering Boat/Outboard 11

Fuel & Oil

Avoiding Fuel Flow Restrictions 12
Fuel Additives 12
Fuel Requirements 12
Gasoline Recommendations 12
Oil Recommendation 12
Filling Remote Oil Tank 12
Filling Engine Mounted Oil Reservoir Tank 12
Filling Fuel Tank 12

Features & Controls

Warning System 12
Remote Control Features 13
Power Trim And Tilt 13
Power Trim Operation 13
Tilting Operation 14
Auxiliary Tilt Switch 14
Manual Tilting 14

Operation

Pre-starting Check List 14
Operating In Freezing Temperatures 14
Operating In Salt Water Or Polluted Water 15
Operating at High Elevations 15
Setting Trim Angle While Running Engine at Idle Speed 15
Operating in Shallow Water 15
Optimax Engine Break-in Procedure 15
Starting The Engine 15
Gear Shifting 16
Stopping The Engine 16

Maintenance

Outboard Care 16
Selecting Replacement Parts For Your Outboard 16
Inspection And Maintenance Schedule 16
Flushing The Cooling System 17
Top Cowl Removal And Installation 17
Cleaning Care for Top Cowl 17
Fuel System 17
Fuel Line Inspection 17
Fuel Filter Replacement 17
Draining Water from the Fuel Filter Chamber 18
Steering Link Rod Fasteners 18
Fuses 18
Corrosion Control Anode 18
Battery Inspection 18
Propeller Replacement 19
Spark Plug Inspection and Replacement 19
Compressor Air intake Filter 20
Lubrication Points 20
Checking Power Trim Fluid 20
Gear Case Lubrication 20
Submerged Outboard 21

Storage

Storage Preparation 21

Troubleshooting

Troubleshooting 21

Owner Service Assistance

Local Repair Service 22
Service Away From Home 22
Parts and Accessories Inquires 22
Service Assistance 22
Mercury Marine Service Offices 23

Maintenance Log

Maintenance Log 24

The description and specifications contained herein were in effect at the time this manual was approved for printing. Mercury Marine, whose policy is one of continued improvement, reserves the right to discontinue models at any time, to change specifications, designs, methods, or procedures without notice and without incurring obligation.

Mercury Marine, Fond du Lac, Wisconsin U.S.A.

© 2002, Mercury Marine
The following are registered trademarks of Brunswick Corporation: Auto-blend, Force, Jet-Prop, Mariner, Merc, Mercathode, MerCruiser, Mercury, Mercury Marine, Quicksilver, Ride-Guide and Thruster

oq

WARRANTY INFORMATION

oq2

TRANSFER OF WARRANTY

The limited warranty is transferable to a subsequent purchaser, but only for the remainder of the unused portion of the limited warranty. This will not apply to products used for commercial applications.

DIRECT SALE BY OWNER

The second owner can be registered as the new owner and retain the unused portion of the limited warranty by sending the former owner's plastic Owner Warranty Registration Card and a copy of the bill of sale to show proof of ownership. In the United States and Canada, mail to:
Mercury Marine
W6250 W. Pioneer Road
P.O. Box 1939
Fond du Lac, WI 54936-1939
Attn: Warranty Registration Department

A new Owner Warranty Registration Card will be issued with the new owner's name and address. Registration records will be changed on the factory computer registration file.

There is no charge for this service.

For products purchased outside the United States and Canada, contact the distributor in your country, or the Mercury Marine Service Office closest to you.

ou1

WARRANTY REGISTRATION

United States And Canada

1. It is important that your selling dealer fills out the Warranty Registration Card completely and mails it to the factory immediately upon sale of the new product.
2. It identifies name and address of the original purchaser, product model and serial number(s), date of sale, type of use and selling dealer's code, name and address. The dealer also certifies that you are the original purchaser and user of the product.
3. Upon receipt of the Warranty Registration Card at the factory, you will be issued a plastic Owner Warranty Registration Card which is your only valid registration identification. It must be presented to the servicing dealer should warranty service be required. Warranty claims will not be accepted without presentation of this card.
4. A temporary Owner Warranty Registration Card will be presented to you when you purchase the product. It is valid only for 30 days from date of sale while your plastic Owner Warranty Registration Card is being processed. Should your product need service during this period, present the temporary registration card to the dealer. He will attach it to your warranty claim form.
5. Because of your selling dealer's continuing personal interest in your satisfaction, the product should be returned to him for warranty service.
6. If your plastic card is not received within 30 days from date of new product sale, please contact your selling dealer.
7. The limited warranty is not effective until the product is registered at the factory.

Note: Registration lists must be maintained by factory and dealer on marine products sold in the United States, should notification under the Federal Boat Safety Act be required.

ou2

WARRANTY REGISTRATION

Outside The United States And Canada

1. It is important that your selling dealer fills out the Warranty Registration Card completely and mails it to the distributor or Marine Power Service Center responsible for administering the warranty registration/claim program for your area.
2. The Warranty Registration Card identifies your name and address, product model and serial number(s), date of sale, type of use and the selling distributor's/dealer's code number, name and address. The distributor/dealer also certifies that you are the original purchaser and user of the product.
3. A copy of the Warranty Registration Card, designated as the "Purchaser's Copy", MUST be given to you immediately after the card has been completely filled out by the selling distributor/dealer. This card represents your factory registration identification, and should be retained by you for future use when required. Should you ever require warranty service on this product, your dealer may ask you for the Warranty Registration Card to verify date of purchase and to use the information on the card to prepare the warranty claim form(s).
4. In some countries, the Marine Power Service Center will issue you a permanent (plastic) Warranty Registration Card within 30 days after receiving the "Factory Copy" of the Warranty Registration Card from your distributor/dealer. If you receive a plastic Warranty Registration Card, you may discard the "Purchaser's Copy" that you received from the distributor/dealer when you purchased the product. Ask your distributor/dealer if this plastic card program applies to you.
5. For further information concerning the Warranty Registration Card and its relationship to Warranty Claim processing, refer to the "International Warranty".

IMPORTANT: Registration lists must be maintained by the factory and dealer in some countries by law. It is our desire to have ALL products registered at the factory should it ever be necessary to contact you. Make sure your dealer/distributor fills out the warranty registration card immediately and sends the factory copy to the Marine Power International Service Center for your area.

ou49

MERCURY MARINE TWO YEARS LIMITED WARRANTY(EUROPE)

WHAT IS COVERED

Mercury Marine warrant each new Mercury Outboard, Mariner Outboard, Jet Products, Thruster Electric Trolling Motors, Mercruiser Inboard or Sterndrive engine products to be free of defects in material and workmanship during the period described below.

DURATION OF COVERAGE

This Limited Warranty provides coverage for two (2) years from the date the product is first sold to a recreational use retail purchaser, or the date on which the product is first put into service, whichever occurs first. Commercial users of these products receive warranty coverage of two (2) years from the date of first retail sale, or the accumulation of 500 hours of operation, whichever occurs first. Commercial use is defined as any work or employment related use of the product, or any use of the product which generates income, for any part of the warranty period, even if the product is only occasionally used for such purposes. The repair or replacement of parts, or the performance of service under this warranty, does not extend the life of this warranty beyond its original expiration date. Unexpired warranty coverage can be transferred to one recreational use to a subsequent recreational use customer upon proper re–registration of the product.

CONDITIONS THAT MUST BE MET IN ORDER TO OBTAIN WARRANTY COVERAGE

Warranty coverage is availble only to retail customers that purchase from a Dealer authorized by Mercury Marine to distribute the product in the country in which the sale occurred, and then only after the Mercury Marine specified pre–delivery inspection process is completed and documented. Warranty coverage becomes available upon proper registration of the product by the authorized dealer. Inaccurate warranty registration information regarding recreational use, or subsequent change of use from recreational to commercial (unless properly re–registered) may void the warranty at the sole discretion of Mercury Marine. Routine maintenance outlined in the Operation and Maintenance Manual must be timely performed in order to maintain warranty coverage. If this maintenance is performed by the retail customer Mercury Marine reserves the right to make future warranty coverage contingent on proof of proper maintenance.

WHAT MERCURY WILL DO

Mercury's sole and exclusive obligation under this warranty is limited to, at our option, repairing a defective part, replacing such part or parts with new or Mercury Marine certified re–manufactured parts, or refunding the purchase price of the Mercury product. Mercury reserves the right to improve or modify products from time to tome without assuming an obligation to modify products previously manufactured.

HOW TO OBTAIN WARRANTY COVERAGE

The customer must provide Mercury with a reasonable opportunity to repair, and reasonable access to the product for warranty service. Warranty claims shall be made by delivering the product for inspection to a Mercury dealer authorized to service the product. If purchaser cannot deliver the product to such a dealer, written notice must be given to Mercury. We will then arrange for the inspection and any covered repair. Purchaser in that case shall pay for all related transportation charges and/or travel time. If the service provided is not covered by this warranty, purchaser shall pay for all related labor and material, and any other expenses associated with that service. Purchaser shall not, unless requested by Mercury, ship the product or parts of the product directly to Mercury. The warranty registration card is the only valid registration identification and must be presented to the dealer at the time warranty service is requested in order to obtain coverage.

WHAT IS NOT COVERED

This limited warranty does not cover routine maintenance items, tune ups, adjustments, normal wear and tear, damage caused by abuse, abnormal use, use of a propeller or gear ratio that does not allow the engine to run in its recommendedwide–open–throttle RPM range (see the Operation and Maintenance Manual), operation of the product in a manner inconsistent with the recommended operation/duty cycle section of the Operation and Maintenance Manual, neglect, accident, submersion, improper installation (proper installation specifications and techniques are set forth in the installation instructions for the product), improper service, use of an accessory or part not manufactured or sold by us, jet pump impellers and liners, operation with fuels, oils or lubricants which are not suitable for use with the product (see the Operation and Maintenance Manual), alteration or removal of parts, or water entering the engine through the fuel intake, air intake or exhaust system. Use of the product for racing or other competitive activity, or operating with a racing type lower unit, at any point, even by a prior owner of the product, voids the warranty.

Expenses related to haul–out, launch, towing, storage, telephone, rental, inconvenience, slip fees, insurance coverage, loan payments, loss of time, loss of income, or any other type of incidental or consequential damages are not covered by this warranty. Also, expenses associated with the removal and/or replacement of boat partitions or material caused by boat design for access to the product are not covered by this warranty.

No individual or entity, including Mercury Marine authorized dealers, has been given authority by Mercury Marine to make any affirmation, representation or warranty regarding the product, other than those contained in this limited warranty, and if made, shall not be enforceable against Mercury Marine.

For additional information regarding events and circumstances covered by this warranty, and those that are not, see the Warranty Coverage section of the Operation and Maintenance Manual, incorporated by reference into this warranty.

DISCLAIMERS AND LIMITATIONS:
THE IMPLIED WARRANTIES OF MERCHANTABILITY AND FITNESS FOR A PARTICULAR PURPOSE ARE EX–PRESSLY DISCLAIMED. TO THE EXTENT THAT THEY CANNOT BE DISCLAIMED, THE IMPLIED WARRANTIESARE LIMITED IN DURATION TO THE LIFE OF THE EXPRESS WARRANTY. INCIDENTAL AND CONSEQUENTIALDAMAGES ARE EXCLUDED FROM COVERAGE UNDER THIS WARRANTY. SOME STATES/COUNTRIES DO NOTALLOW FOR THE DISCLAIMERS, LIMITATIONS AND EXCLUSIONS IDENTIFIED ABOVE, AS A RESULT, THEYMAY NOT APPLY TO YOU. THIS WARRANTY GIVES YOU SPECIFIC LEGAL RIGHTS, AND YOU MAY ALSO HAVEOTHER LEGAL RIGHTS WHICH VARY FROM STATE TO STATE AND COUNTRY TO COUNTRY.

ou50

MERCURY MARINE ONE YEAR LIMITED WARRANTY(CONFEDERATION OF INDEPENDENT STATES, MIDDLE– EAST, AFRICA)

WHAT IS COVERED

Mercury Marine warrant each new Mercury outboard, Mariner outboard, Jet Products, Thruster Electric Trolling Motors, Mercruiser Inboard or Sterndrive engine products to be free of defects in material and workmanship during the period described below.

DURATION OF COVERAGE

This Limited Warranty provides coverage for one (1) year from the date the product is first sold to a recreational use retail purchaser, or the date on which the product is first put into service, whichever occurs first. Commercial users of these products receive warranty coverage of one (1) years from the date of first retail sale, or the accumulation of 500 hours of operation, whichever occurs first. Commercial use is defined as any work or employment related use of the product, or any use of the product which generates income, for any part of the warranty period, even if the product is only occasionally used for such purposes. The repair or replacement of parts, or the performance of service under this warranty, does not extend the life of this warranty beyond its original expiration date. Unexpired warranty coverage can be transferred to a subsequent purchaser upon proper re–registration of the product.

CONDITIONS THAT MUST BE MET IN ORDER TO OBTAIN WARRANTY COVERAGE

Warranty coverage is available only to retail customers that purchase from a Dealer authorized by Mercury Marine to distribute the product in the country in which the sale occurred, and then only after the Mercury Marine specified pre–delivery inspection process is completed and documented. Warranty coverage becomes available upon proper registration of the product by the authorized dealer. Inaccurate warranty registration information regarding recreational use, or subsequent change of use from recreational to commercial (unless properly re–registered) may void the warranty at the sole discretion of Mercury Marine. Routine maintenance outlined in the Operation and Maintenance Manual must be timely performed in order to maintain warranty coverage. If this maintenance is performed by the retail customer Mercury Marine reserves the right to make future warranty coverage contingent on proof of proper maintenance.

WHAT MERCURY WILL DO

Mercury's sole and exclusive obligation under this warranty is limited to, at our option, repairing a defective part, replacing such part or parts with new or Mercury Marine certified re–manufactured parts, or refunding the purchase price of the Mercury product. Mercury reserves the right to improve or modify products from time to time without assuming an obligation to modify products previously manufactured.

HOW TO OBTAIN WARRANTY COVERAGE

The customer must provide Mercury with a reasonable opportunity to repair, and reasonable access to the product for warranty service. Warranty claims shall be made by delivering the product for inspection to a Mercury dealer authorized to service the product. If purchaser cannot deliver the product to such a dealer, written notice must be given to Mercury. We will then arrange for the inspection and any covered repair. Purchaser in that case shall pay for all related transportation charges and/or travel time. If the service provided is not covered by this warranty, purchaser shall pay for all related laborand material, and any other expenses associated with that service. Purchaser shall not, unless requested by Mercury, shipthe product or parts of the product directly to Mercury. The warranty registration card is the only valid registration identificationand must be presented to the dealer at the time warranty service is requested in order to obtain coverage.

WHAT IS NOT COVERED

This limited warranty does not cover routine maintenance items, tune ups, adjustments, normal wear and tear, damage caused by abuse, abnormal use, use of a propeller or gear ratio that does not allow the engine to run in its recommendedwide–open–throttle RPM range (see the Operation and Maintenance Manual), operation of the product in a manner inconsistentwith the recommended operation/duty cycle section of the Operation and Maintenance Manual, neglect, accident,submersion, improper installation (proper installation specifications and techniques are set forth in the installation instructionsfor the product), improper service, use of an accessory or part not manufactured or sold by us, jet pump impellersand liners, operation with fuels, oils or lubricants which are not suitable for use with the product (see the Operation andMaintenance Manual), alteration or removal of parts, or water entering the engine through the fuel intake, air intake orexhaust system. Use of the product for racing or other competitive activity, or operating with a racing type lower unit, atany point, even by a prior owner of the product, voids the warranty.

Expenses related to haul–out, launch, towing, storage, telephone, rental, inconvenience, slip fees, insurance coverage,loan payments, loss of time, loss of income, or any other type of incidental or consequential damages are not coveredby this warranty. Also, expenses associated with the removal and/or replacement of boat partitions or material caused byboat design for access to the product are not covered by this warranty.

No individual or entity, including Mercury Marine authorized dealers, has been given authority by Mercury Marine to makeany affirmation, representation or warranty regarding the product, other than those contained in this limited warranty, andif made, shall not be enforceable against Mercury Marine.

For additional information regarding events and circumstances covered by this warranty, and those that are not, see theWarranty Coverage section of the Operation and Maintenance Manual, incorporated by reference into this warranty.

DISCLAIMERS AND LIMITATIONS:
THE IMPLIED WARRANTIES OF MERCHANTABILITY AND FITNESS FOR A PARTICULAR PURPOSE ARE EX–PRESSLY DISCLAIMED. TO THE EXTENT THAT THEY CANNOT BE DISCLAIMED, THE IMPLIED WARRANTIESARE LIMITED IN DURATION TO THE LIFE OF THE EXPRESS WARRANTY. INCIDENTAL AND CONSEQUENTIALDAMAGES ARE EXCLUDED FROM COVERAGE UNDER THIS WARRANTY. SOME STATES/COUNTRIES DO NOTALLOW FOR THE DISCLAIMERS, LIMITATIONS AND EXCLUSIONS IDENTIFIED ABOVE, AS A RESULT, THEYMAY NOT APPLY TO YOU. THIS WARRANTY GIVES YOU SPECIFIC LEGAL RIGHTS, AND YOU MAY ALSO HAVEOTHER LEGAL RIGHTS WHICH VARY FROM STATE TO STATE AND COUNTRY TO COUNTRY.

ou51

3 YEAR LIMITED WARRANTY AGAINST CORROSION FAILURE

WHAT IS COVERED

Mercury Marine warrants each new Mercury outboard, Mariner outboard, Mercury Racing, Jet Products, Thruster Electric Motor, Mercury Racing, Tracker by Mercury Marine Outboard, Mercruiser Inboard or sterndrive engine (Product) rendered inoperative as a direct result of corrosion for the period of time described below.

DURATION OF COVERAGE

This limited corrosion warranty provides coverage for three (3) years from the date the product is first sold, or the date on which the product is first put into service, whichever occurs first. The repair or replacement of parts, or the performanceof service under this warranty does not extend the life of this warranty beyond its original expiration date. Unexpired warrantycoverage can be transferred to subsequent (noncommercial use) purchaser upon proper re–registration of the product.

CONDITIONS THAT MUST BE MET IN ORDER TO OBTAIN WARRANTY COVERAGE

Warranty coverage is available only to retail customers that purchase from a Dealer authorized by Mercury Marine to distribute the product in the country in which the sale occurred, and then only after the Mercury Marine specified pre–deliveryinspection process is completed and documented. Warranty coverage becomes available upon proper registration of theproduct by the authorized dealer. Corrosion prevention devices specified in the Operation and Maintenance Manual mustbe in use on the boat, and routine maintenance outlined in the Operation and Maintenance Manual must be timely per–formed(including without limitation the replacement of sacrificial anodes, use of specified lubricants, and touch–up of nicksand scratches) in order to maintain warranty coverage. If this maintenance is performed by the retail customer MercuryMarine reserves the right to make future warranty coverage contingent on proof of proper maintenance.

WHAT MERCURY WILL DO

Mercury's sole and exclusive obligation under this warranty is limited to, at our option, repairing a corroded part, replacing such part or parts with new or Mercury Marine certified re–manufactured parts, or refunding the purchase price of the Mercuryproduct. Mercury reserves the right to improve or modify products from time to time without assuming an obligationto modify products previously manufactured.

HOW TO OBTAIN WARRANTY COVERAGE

The customer must provide Mercury with a reasonable opportunity to repair, and reasonable access to the product for warranty service. Warranty claims shall be made by delivering the product for inspection to a Mercury dealer authorizedto service the product. If purchaser cannot deliver the product to such a dealer, written notice must be given to Mercury.We will then arrange for the inspection and any covered repair. Purchaser in that case shall pay for all related transportationcharges and/or travel time. If the service provided is not covered by this warranty, purchaser shall pay for all relatedlabor and material, and any other expenses associated with that service. Purchaser shall not, unless requested by Mercury,ship the product or parts of the product directly to Mercury. The warranty registration card is the only valid registrationidentification and must be presented to the dealer at the time warranty service is requested in order to obtain coverage.

WHAT IS NOT COVERED

This limited warranty does not cover electrical system corrosion; corrosion resulting from damage, corrosion which causes purely cosmetic damage, abuse or improper service; corrosion to accessories, instruments, steering systems; corrosionto factory installed jet drive unit; damage due to marine growth; product sold with less than a one year limited Productwarranty; replacement parts (parts purchased by customer); products used in a commercial application. Commercial useis defined as any work or employment related use of the product, or any use of the product which generates income, forany part of the warranty period, even if the product is only occasionally used for such purposes.

Corrosion damage caused by stray electrical currents (on–shore power connections, nearby boats, submerged metal)is not covered by this corrosion warranty and should be protected against by the use of a corrosion protection system,such as the Mercury Precision Parts or Quicksilver MerCathode system and/or Galvanic Isolator. Corrosion damagecaused by improper application of copper base anti–fouling paints is also not covered by this limited warranty. If anti–foul–ingprotection is required, Tri–Butyl–Tin–Adipate (TBTA) base anti–fouling paints are recommended on Outboard andMerCruiser boating applications. In areas where TBTA base paints are prohibited by law, copper base paints can be usedon the hull and transom. Do not apply paint to the outboard or MerCruiser product. In addition, care must be taken toavoid an electrical interconnection between the warranted product and the paint. Refer to the Operation and MaintenanceManual for additional details.

For additional information regarding events and circumstances covered by this warranty, and those that are not, see theWarranty Coverage section of the Operation and Maintenance Manual, incorporated by reference into this warranty.

DISCLAIMERS AND LIMITATIONS:
THE IMPLIED WARRANTIES OF MERCHANTABILITY AND FITNESS FOR A PARTICULAR PURPOSE ARE EX–PRESSLY DISCLAIMED. TO THE EXTENT THAT THEY CANNOT BE DISCLAIMED, THE IMPLIED WARRANTIESARE LIMITED IN DURATION TO THE LIFE OF THE EXPRESS WARRANTY. INCIDENTAL AND CONSEQUENTIALDAMAGES ARE EXCLUDED FROM COVERAGE UNDER THIS WARRANTY. SOME STATES/COUNTRIES DO NOTALLOW FOR THE DISCLAIMERS, LIMITATIONS AND EXCLUSIONS IDENTIFIED ABOVE, AS A RESULT, THEYMAY NOT APPLY TO YOU. THIS WARRANTY GIVES YOU SPECIFIC LEGAL RIGHTS, AND YOU MAY ALSO HAVEOTHER LEGAL RIGHTS WHICH VARY FROM STATE TO STATE AND COUNTRY TO COUNTRY.

ou

WARRANTY INFORMATION

op5

WARRANTY COVERAGE AND EXCLUSIONS

The purpose of this section is to help eliminate some of the more common misunderstandings regarding warranty coverage. The following information explains some of the types of services that are not covered by warranty. The provisions set forth following have been incorporated by reference into the Three-Year Limited Warranty Against Corrosion Failure, the International Limited Outboard Warranty, and the United States and Canada Limited Outboard Warranty.

Keep in mind that warranty covers repairs that are needed within the warranty period because of defects in material and workmanship. Installation errors, accidents, normal wear, and a variety of other causes that affect the product are not covered.

Warranty is limited to defects in material or workmanship, but only when the consumer sale is made in the country to which distribution is authorized by us.

Should you have any questions concerning warranty coverage, contact your authorized dealer. They will be pleased to answer any questions that you may have.

General exclusions from warranty:

1. Minor adjustments and tune-ups, including checking, cleaning or adjusting spark plugs, ignition components, carburetor settings, filters, belts, controls, and checking lubrication made in connection with normal services.
2. Factory Installed Jet Drive units - Specific parts excluded from the warranty are: The jet drive impeller and jet drive liner damaged by impact or wear, and water damaged drive shaft bearings as a result of improper maintenance.
3. Damage caused by neglect, lack of maintenance, accident, abnormal operation or improper installation or service.
4. Haul-out, launch, towing charges, removal and/or replacement of boat partitions or material because of boat design for necessary access to the product, all related transportation charges and/or travel time, etc. Reasonable access must be provided to the product for warranty service. Customer must deliver product to an authorized dealer.
5. Additional service work requested by customer other than that necessary to satisfy the warranty obligation.

op

WARRANTY COVERAGE

op6

WARRANTY COVERAGE AND EXCLUSIONS

6. Labor performed by other than an authorized dealer may be covered only under following circumstances: When performed on emergency basis (providing there are no authorized dealers in the area who can perform the work required or have no facilities to haul out, etc., and prior factory approval has been given to have the work performed at this facility).
7. All incidental and/or consequential damages (storage charges, telephone or rental charges of any type, inconvenience or loss of time or income) are the owner's responsibility.
8. Use of other than Mercury Precision or Quicksilver replacement parts when making warranty repairs.
9. Oils, lubricants or fluids changed as a matter of normal maintenance is customer's responsibility unless loss or contamination of same is caused by product failure that would be eligible for warranty consideration.
10. Participating in or preparing for racing or other competitive activity or operating with a racing type lower unit.
11. Engine noise does not necessarily indicate a serious engine problem. If diagnosis indicates a serious internal engine condition which could result in a failure, condition responsible for noise should be corrected under the warranty.
12. Lower unit and/or propeller damage caused by striking a submerged object is considered a marine hazard.
13. Water entering engine through the fuel intake, air intake or exhaust system. or submersion.
14. Failure of any parts caused by lack of cooling water, which results from starting motor out of water, foreign material blocking inlet holes, motor being mounted too high or trimmed too far out.
15. Use of fuels and lubricants which are not suitable for use with or on the product. Refer to the Maintenance Section.
16. Our limited warranty does not apply to any damage to our products caused by the installation or use of parts and accessories which are not manufactured or sold by us. Failures which are not related to the use of those parts or accessories are covered under warranty if they otherwise meet the terms of the limited warranty for that product.

ob

GENERAL INFORMATION

oba1

BOATER'S RESPONSIBILITIES

The operator (driver) is responsible for the correct and safe operation of the boat and safety of its occupants and general public. It is strongly recommended that each operator (driver) read and understand this entire manual before operating the outboard.

Be sure at least one additional person on board is instructed in the basics of starting and operating the outboard and boat handling in case the driver is unable to operate the boat.

obb1

BEFORE OPERATING YOUR OUTBOARD

Read this manual carefully. Learn how to operate your outboard properly. If you have any questions, contact your dealer.

Safety and operating information that is practiced along with using good common sense can help prevent personal injury and product damage.

This manual as well as safety labels posted on the outboard use the following safety alerts to draw your attention to special safety instructions that should be followed.

⚠ DANGER

DANGER – Immediate hazards which WILL result in severe personal injury or death.

⚠ WARNING

WARNING – Hazards or unsafe practices which COULD result in severe personal injury or death.

⚠ CAUTION

CAUTION – Hazards or unsafe practices which could result in minor injury or product or property damage.

gob12

U.S. COAST GUARD CAPACITY	
MAXIMUM HORSEPOWER	XXX
MAXIMUM PERSON CAPACITY (POUNDS)	XXX
MAXIMUM WEIGHT CAPACITY	XXX

1

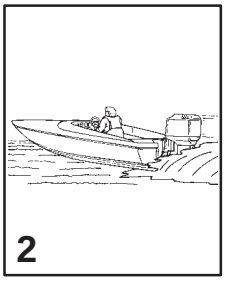

2

obc1

BOAT HORSEPOWER CAPACITY

1 Do not overpower or overload your boat. Most boats will carry a required capacity plate indicating the maximum acceptable power and load as determined by the manufacturer following certain federal guidelines. If in doubt, contact your dealer or the boat manufacturer.

⚠ WARNING

Using an outboard that exceeds the maximum horsepower limit of a boat can: 1. cause loss of boat control 2. place too much weight at the transom altering the designed flotation characteristics of the boat or 3. cause the boat to break apart particularly around the transom area. Overpowering a boat can result in serious injury, death, or boat damage.

obd2

HIGH-SPEED AND HIGH-PERFORMANCE BOAT OPERATION

2 If your outboard is to be used on a high-speed or high-performance boat with which you are unfamiliar, we recommend that you never operate it at its high speed capability without first requesting an initial orientation and familiarization demonstration ride with your dealer or an operator experienced with your boat/outboard combination. For additional information, obtain a copy of our Guide to Hi-Performance Boat Operation booklet (Part Number 90-848481) from your dealer, distributor, or Mercury Marine.

gob28

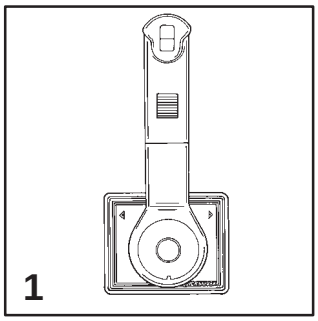

1

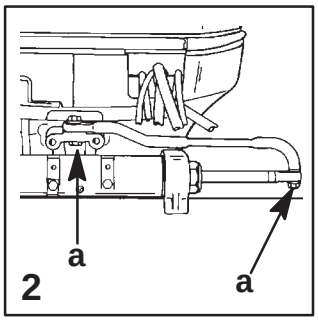

2

obe1

OUTBOARD REMOTE CONTROL MODELS

1 The remote control connected to your outboard must be equipped with a "start-in-neutral" only protection device. This prevents the engine from starting when the shift is actuated in any position other than neutral.

⚠ WARNING

Avoid serious injury or death from a sudden unexpected acceleration when starting your engine. The design of this outboard requires that the remote control used with it must have a built in "start-in-neutral" only protection device.

obf1

REMOTE STEERING NOTICE

2 The steering link rod that connects the steering cable to the engine must be fastened utilizing self-locking nuts (a). These self-locking nuts must never be replaced with common nuts (non locking) as they will work loose and vibrate off, freeing the link rod to disengage.

⚠ WARNING

Disengagement of a steering link rod can result in the boat taking a full, sudden, sharp turn. This potentially violent action can cause occupants to be thrown overboard exposing them to serious injury or death.

gob8

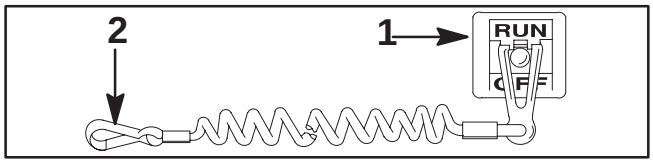

obg6

LANYARD STOP SWITCH

1 The purpose of a lanyard stop switch is to turn off the engine when the operator moves far enough away from the operator's position (as in accidental ejection from the operator's position) to activate the switch. Tiller handle outboards and some remote control units are equipped with a lanyard stop switch. A lanyard stop switch can be installed as an accessory – generally on the dashboard or side adjacent to the operator's position.

2 The lanyard is a cord usually between 4 and 5 feet (1220 and 1524 mm) in length when stretched out with an element on one end made to be inserted into the switch and a snap on the other end for attaching to the operator. The lanyard is coiled to make its at-rest condition as short as possible so as to minimize the likelihood of lanyard entanglement with nearby objects. It is made as long as it is in its stretched condition to minimize the likelihood of accidental activation should the operator choose to move around in an area close to the normal operator's position. If it is desired to have a shorter lanyard, wrap the lanyard around the operator's wrist or leg, or tie a knot in the lanyard.

GENERAL INFORMATION

LANYARD STOP SWITCH (CONTINUED)

Read the following Safety Information before proceeding.

Important Safety Information: The purpose of a lanyard stop switch is to stop the engine when the operator moves far enough away from the operator's position to activate the switch. This would occur if the operator accidentally falls overboard or moves within the boat a sufficient distance from the operator's position. Accidental ejections and falls overboard are more likely to occur in certain types of boats such as low sided inflatables or bass boats, high-performance boats and light, sensitive-handling fishing boats operated by hand-tiller. Accidental ejections and falls overboard are also likely to occur as a result of poor operating practices such as sitting on the back of the seat or gunwale at planing speeds, standing at planing speeds, sitting on elevated fishing boat decks, operating at planing speeds in shallow or obstacle-infested waters, releasing your grip on a steering wheel or tiller handle that is pulling in one direction, drinking alcohol or consuming drugs, or daring, high-speed boat maneuvers.

While activation of the lanyard stop switch will stop the engine immediately, a boat will continue to coast for some distance depending upon the velocity and degree of any turn at shut-down. However, the boat will not complete a full circle. While the boat is coasting, it can cause injury to anyone in the boat's path as seriously as the boat would when under power.

We strongly recommend that other occupants be instructed on proper starting and operating procedures should they be required to operate the engine in an emergency (e.g. if the operator is accidentally ejected).

⚠ WARNING

Should the operator fall out of the boat, the possibility of serious injury or death from being run over by the boat can be greatly reduced by stopping the engine immediately. Always properly connect both ends of the stop switch lanyard – to the stop switch and the operator.

Accidental or unintended activation of the switch during normal operation is also a possibility. This could cause any, or all, of the following potentially hazardous situations:

1. Occupants could be thrown forward due to unexpected loss of forward motion – a particular concern for passengers in the front of the boat who could be ejected over the bow and possibly struck by the gear case or propeller.
2. Loss of power and directional control in heavy seas, strong current or high winds.
3. Loss of control when docking.

⚠ WARNING

Avoid serious injury or death from deceleration forces resulting from accidental or unintended stop switch activation. The boat operator should never leave the operator's station without first disconnecting the stop switch lanyard from the operator.

gob3

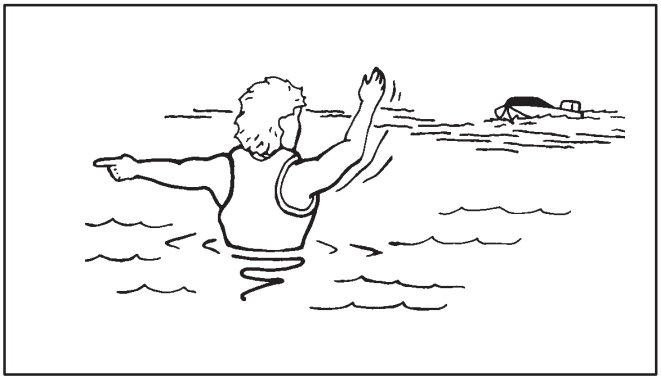

obh2

PROTECTING PEOPLE IN THE WATER

While You are Cruising

It is very difficult for a person standing or floating in the water to take quick action to avoid a boat heading in his/her direction even at slow speed.

Always slow down and exercise extreme caution any time you are boating in an area where there might be people in the water.

Whenever a boat is moving (coasting) and the outboard gear shift is in neutral position, there is sufficient force by the water on the propeller to cause the propeller to rotate. This neutral propeller rotation can cause serious injury.

While Boat is Stationary

Shift outboard into neutral and shut off the engine before allowing people to swim or be in the water near your boat.

⚠ WARNING

Stop your engine immediately whenever anyone in the water is near your boat. Serious injury to the person in the water is likely if contacted by a rotating propeller, a moving boat, a moving gear case, or any solid device rigidly attached to a moving boat or gear case.

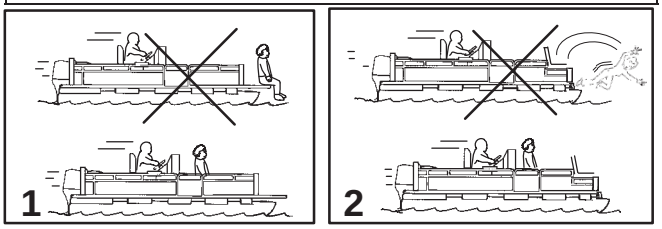

obh2

PASSENGER SAFETY MESSAGE - PONTOON BOATS AND DECK BOATS

Whenever the boat is in motion, observe the location of all the passengers. Do not allow any passengers to stand or use seats other than those designated for traveling faster than idle speed, because a sudden reduction in boat speed, such as the result of plunging into a large wave or wake, a sudden throttle reduction, or a sharp change of boat direction, could throw them over the front of boat. Falling over the front of the boat between the two pontoons will position them to be run over by the outboard.

1 Boats having an open front deck:

No one should ever be on the deck in front of the fence while the boat is in motion. Keep all passengers behind the front fence or enclosure.

Persons on the front deck could easily be thrown overboard or persons dangling their feet over the front edge could get their legs caught by a wave and pulled into the water.

2 Boats with front-mounted, raised pedestal fishing seats:

These elevated fishing seats are not intended for use when the boat is traveling faster than idle or trolling speed. Sit only in seats designated for traveling at faster speeds.

Any unexpected sudden reduction in boat speed could result in the elevated passenger falling over the front of the boat.

⚠ WARNING

Avoid serious injury or death from falling over the front end of a pontoon or deck boat and being run over by the outboard. Stay back from the front end of the deck and remain seated while the boat is in motion.

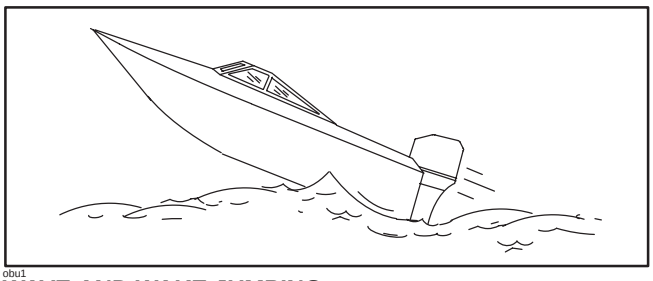

obu1

WAVE AND WAKE JUMPING

Operating recreational boats over waves and wakes is a natural part of boating. However, when this activity is done with sufficient speed to force the boat hull partially or completely out of the water, certain hazards arise, particularly when the boat re-enters the water.

The primary concern is the boat changing direction while in the midst of the jump. In such case the landing may cause the boat to veer violently in a new direction. Such a sharp change in direction can cause occupants to be thrown out of their seats, or out of the boat.

There is another less common hazardous result from allowing your boat to launch off a wave or wake. If the bow of your boat pitches down far enough while airborne, upon water contact it may penetrate under the water surface and "submarine" for an instant. This will bring the boat to a nearly instantaneous stop and can send the occupants flying forward. The boat may also steer sharply to one side.

⚠ WARNING

Avoid serious injury or death from being thrown within or out of a boat when it lands after jumping a wave or wake. Avoid wave or wake jumping whenever possible. Instruct all occupants that if a wake or wave jump occurs, get low and hang on to any boat hand hold.

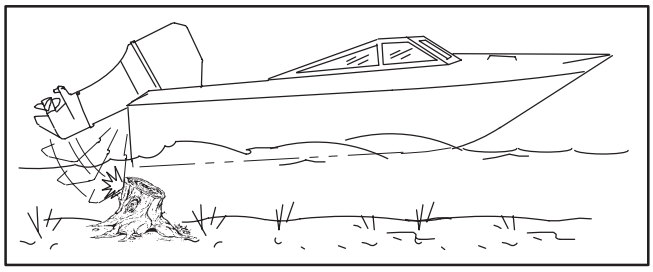

ob

GENERAL INFORMATION

obt5

IMPACT WITH UNDERWATER HAZARDS

Reduce speed and proceed with caution whenever you drive a boat in shallow water areas or in areas where you suspect of underwater obstacles may exist which could be struck by the outboard or the boat bottom. **The most important thing you can do to help reduce injury or impact damage from striking a floating or underwater object is to control the boat speed. Under these conditions, boat speed should be kept to a minimum planing speed (15 to 25 MPH).**

⚠ WARNING

To avoid serious injury or death from all or part of an outboard coming into the boat after striking a floating or underwater obstacle maintain a top speed no greater than minimum planing speed.

Striking a floating or underwater object could result in an infinite number of situations. Some of these situations could result in the following:

a. Part of the outboard or the entire outboard could break loose and fly into the boat.

b. The boat could move suddenly in a new direction. Such a sharp change in direction can cause occupants to be thrown out of their seats or out of the boat.

c. A rapid reduction in speed. This will cause occupants to be thrown forward, or even out of the boat.

d. Impact damage to the outboard and/or boat.

obt6

IMPACT WITH UNDERWATER HAZARDS

Keep in mind, the most important thing you can do to help reduce injury or impact damage in these situations is control the boat speed. Boat speed should be kept to a minimum planing speed when driving in waters known to have underwater obstacles.

After striking a submerged object, stop the engine as soon as possible and inspect the outboard for any broken or loose parts. If damage is present or suspected, the outboard should be taken to an authorized dealer for a thorough inspection and necessary repair.

The boat should also be checked for any hull fractures, transom fractures, or water leaks.

Operating a damaged outboard could cause additional damage to other parts of the outboard, or could affect control of the boat. If continued running is necessary, do so at greatly reduced speeds.

⚠ WARNING

Avoid serious injury or death from loss of boat control. Continued boating with major impact damage can result in sudden outboard component failure with or without subsequent impacts. Have the outboard thoroughly inspected and any necessary repairs made.

gob4

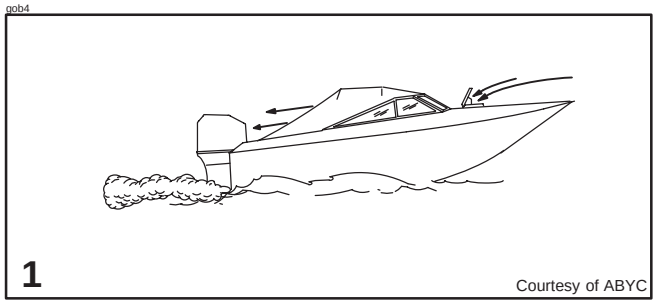

Courtesy of ABYC

obi2

EXHAUST EMISSIONS

Be Alert To Carbon Monoxide Poisoning

Carbon monoxide is present in the exhaust fumes of all internal combustion engines including the outboards, stern drives and inboard engines that propel boats, as well as the generators that power various boat accessories. Carbon monoxide is a deadly gas that is odorless, colorless and tasteless.

Early symptoms of carbon monoxide poisoning which should not be confused with seasickness or intoxication, include headache, dizziness, drowsiness, and nausea.

⚠ WARNING

Avoid the combination of a running engine and poor ventilation. Prolonged exposure to carbon monoxide in sufficient concentration can lead to unconsciousness, brain damage, or death.

Good Ventilation

Ventilate passenger area, open side curtains, or forward hatches to remove fumes.

1 Example of desired air flow through the boat.

gob39

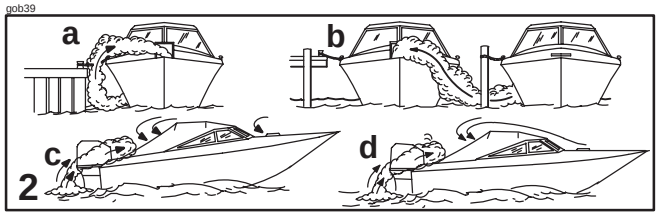

obi3

EXHAUST EMISSIONS (CONTINUED)

Poor Ventilation

Under certain running and/or wind conditions, permanently enclosed or canvas enclosed cabins or cockpits with insufficient ventilation may draw in carbon monoxide. Install one or more carbon monoxide detectors in your boat.

Although the occurrence is rare, on a very calm day, swimmers and passengers in an unclosed area of a stationary boat that contains or is near a running engine may be exposed to a hazardous level of carbon monoxide.

2 Examples of Poor Ventilation:

While boat is stationary

a. Running the engine when the boat is moored in a confined space.

b. Mooring close to another boat that has its engine running.

While boat is moving

c. Running the boat with the trim angle of the bow too high.

d. Running the boat with no forward hatches open (station wagon effect).

ob

GENERAL INFORMATION

obj2

SELECTING ACCESSORIES FOR YOUR OUTBOARD

Genuine Mercury Precision or Quicksilver Accessories have been specifically designed and tested for your outboard. These accessories are avialable from Mercury Marine dealers.

Some accessories not manufactured or sold by Mercury Marine are not designed to be safely used with your outboard or outboard operating system. Acquire and read the installation, operation, and maintenance manuals for all your selected accessories.

⚠ WARNING

Check with your dealer before installation of accessories. The misuse of acceptable accessories or the use of unacceptable accessories can result in serious injury, death, or product failure.

obk1

SAFE BOATING SUGGESTIONS

In order to safely enjoy the waterways, familiarize yourself with local and other governmental boating regulations and restrictions, and consider the following suggestions.

Use flotation devices. Have an approved personal flotation device of suitable size for each person aboard (it is the law) and have it readily accessible.

Do not overload your boat. Most boats are rated and certified for maximum load (weight) capacities (refer to your boat capacity plate). If in doubt, contact your dealer or the boats manufacturer.

Perform safety checks and required maintenance. Follow a regular schedule and ensure that all repairs are properly made.

Know and obey all nautical rules and laws of the waterways. Boat operators should complete a boating safety course. Courses are offered in the U.S.A. by (1) The U.S. Coast Guard Auxiliary, (2) The Power Squadron, (3) The Red Cross and (4) your state boating law enforcement agency. Inquiries may be made to the Boating Hot-line, 1-800-368-5647 or the Boat U.S. Foundation information number 1-800-336-BOAT.

Make sure everyone in the boat is properly seated. Don't allow anyone to sit or ride on any part of the boat that was not intended for such use. This includes backs of seats, gunwales, transom, bow, decks, raised fishing seats, any rotating fishing seat; anywhere that sudden unexpected acceleration, sudden stopping, unexpected loss of boat control or sudden boat movement could cause a person to be thrown overboard or into the boat.

Never be under the influence of alcohol or drugs while boating (it is the law). They impair your judgment and greatly reduce your ability to react quickly.

Prepare other boat operators. Instruct at least one person on board in the basics of starting and operating the outboard and boat handling in case the driver becomes disabled or falls overboard.

Passenger boarding. Stop the engine whenever passengers are boarding, unloading or are near the back (stern) of the boat. Just shifting the outboard into neutral is not sufficient.

Be alert. The operator of the boat is responsible by law to "maintain a proper lookout by sight (and hearing)." The operator must have an unobstructed view particularly to the front. No passengers, load, or fishing seats should block the operators view when operating the boat above idle speed.

Never drive your boat directly behind a water skier in case the skier falls. As an example, your boat traveling at 25 miles per hour (40 km/hr) in 5 seconds will overtake a fallen skier who was 200 feet (61m) in front of you.

Watch fallen skiers. When using your boat for water skiing or similar activities, always keep a fallen or down skier on the operator's side of the boat while returning to attend the skier. The operator should always have the down skier in sight and never back up to the skier or anyone in the water.

Report accidents. Boat operators are required by law to file a Boating Accident Report with their state boating law enforcement agency when their boat is involved in certain boating accidents. A boating accident must be reported if (1) there is loss of life or probable loss of life, (2) there is personal injury requiring medical treatment beyond first aid, (3) there is damage to boats or other property where the damage value exceeds $500.00 or (4) there is complete loss of the boat. Seek further assistance from local law enforcement.

gob24

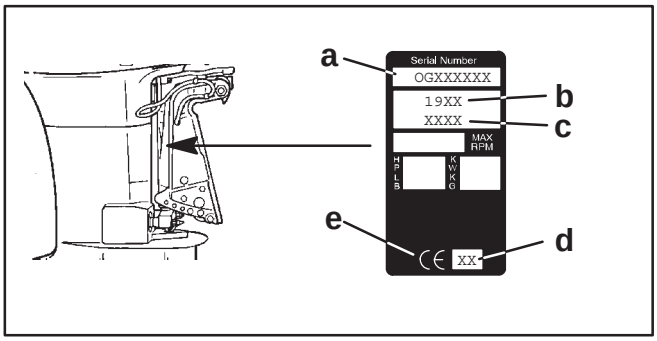

obl9

RECORDING SERIAL NUMBER

It is important to record this number for future reference. The serial number is located on the outboard as shown.

a. Serial Number
b. Model Year
c. Model Designation
d. Year Manufactured
e. Certified Europe Insignia (as Applicable)

obm74

SPECIFICATIONS

Models	200	225
Horsepower	200	225
Kilowatts	149	168
Full Throttle RPM Speed	5000-5750	
Idle Speed in Forward Gear	575 ± 25 RPM	
Number of Cylinders	6	
Piston Displacement	185 cu. in. (3032 cc)	
Cylinder Bore	3.626 in. (92.1mm)	
Piston Stroke	3.000 in. (76.2mm)	
Recommended Spark Plug	NGK PZFR5F-1	
Spark Plug Gap	.040 in. (1.0mm)	
Gear Ratio		
Standard Gear Case	1.75:1	
High Altitude Gear Case	1.87:1	
Recommended Gasoline	Refer to Fuel Section	
Recommended Oil	Refer to Fuel Section	
Gear Case Lubricant Capacity	26 fl. oz. (769ml)	
Battery Rating	1000 Marine Cranking Amps (MCA) or 750 Cold Cranking AMPS (CCA) or Amp Hours 105	
Charging System Output	60 Amps	

gob29

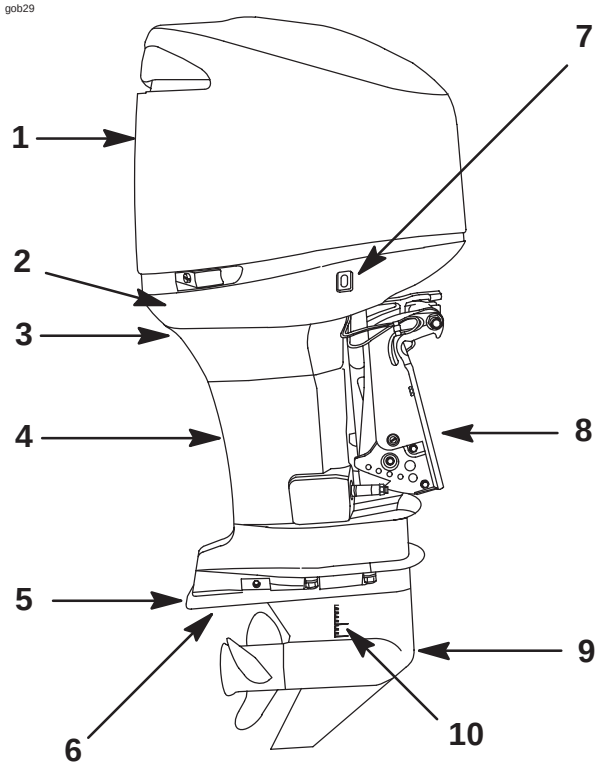

ob

GENERAL INFORMATION

obn6

COMPONENT IDENTIFICATION

1. Top Cowl
2. Bottom Cowl
3. Water Pump Indicator Hole
4. Drive Shaft Housing
5. Anti-Ventilation Plate
6. Anode Plate
7. Auxiliary Tilt Switch
8. Transom Brackets
9. Gear Case
10. Cooling Water Intake Holes

goc16

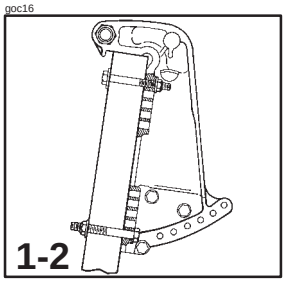

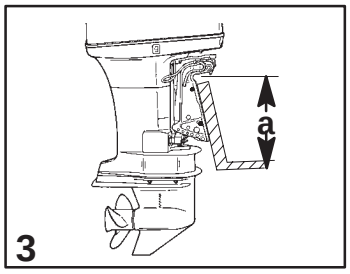

oc

INSTALLATION

oca5

INSTALLING OUTBOARD

⚠ WARNING

Before operation, the outboard must be correctly installed with four mounting bolts shown. Failure to correctly fasten outboard could result in outboard ejecting off boat transom causing serious injury, death, or property damage.

1 We strongly recommend that your dealer install your outboard and related accessories to ensure proper installation and good performance. If you install the outboard yourself, follow instructions in the Outboard Installation Manual which is provided with the outboard.

2 The outboard must be secured to the transom with the four 1/2 inch diameter mounting bolts and locknuts provided with the outboard. Install two bolts thru the upper set of holes and two bolts thru the lower set of holes.

oci3

Maximum Outboard Mounting Height

3 The mounting height (a) for the outboard must not exceed 25 in. (635 mm) for L models, 30 in. (762 mm) for XL models, and 35 in. (889 mm) for XXL models. Mounting the outboard higher may cause damage to the gear case components.

goc11

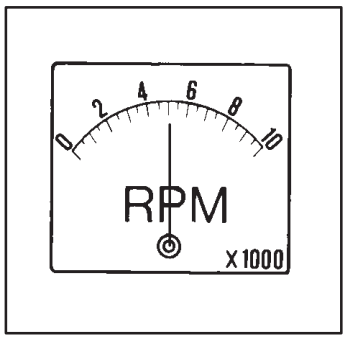

ocb1

PROPELLER SELECTION

For best all around performance from your outboard/boat combination, select a propeller that allows the engine to operate in the upper half of the recommended full throttle RPM range with the boat normally loaded (refer to Specifications). This RPM range allows for better acceleration while maintaining maximum boat speed.

If changing conditions cause the RPM to drop below the recommended range (such as warmer, more humid weather, operation at higher elevations, increased boat load, or a dirty boat bottom/gear case) a propeller change or cleaning may be required to maintain performance and ensure the outboards durability.

Check full-throttle RPM using an accurate tachometer with the engine trimmed out to a balanced-steering condition (steering effort equal in both directions) without causing the propeller to “break loose.”

god10

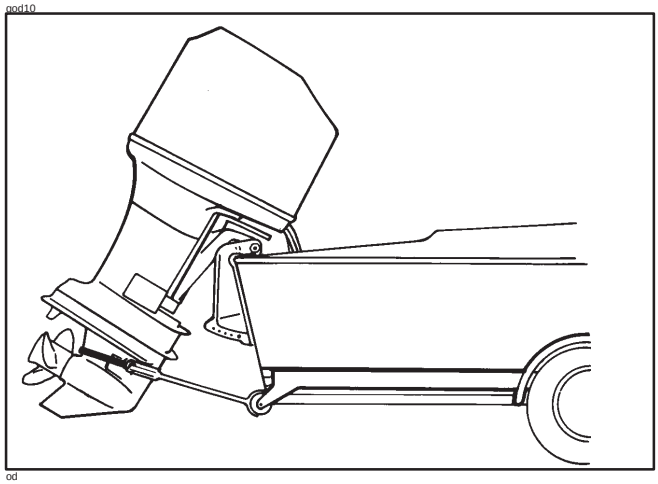

od

TRANSPORTING

odc9

TRAILERING BOAT/OUTBOARD

Trailer your boat with the outboard tilted down (vertical operating position).

If additional ground clearance is required, the outboard should be tilted up using an accessory outboard support device. Refer to your local dealer for recommendations. Additional clearance may be required for railroad crossings, driveways and trailer bouncing.

IMPORTANT: Do not rely on the power trim/tilt system or tilt support lever to maintain proper ground clearance for trailering. The outboard tilt support lever is not intended to support the outboard for trailering.

Prevent the propeller from spinning freely by securing the propeller to the gear case with an elastic cord.

oe

FUEL & OIL

oes1

AVOIDING FUEL FLOW RESTRICTIONS

IMPORTANT: Adding components to the fuel supply system as in filters, valves, fillings, etc. may restrict the fuel flow and could cause engine stalling at low speed, and/or a lean fuel condition at high RPM, that could cause engine damage.

oet1

FUEL ADDITIVES

To minimize carbon deposit buildup in the engine, we recommend adding Mercury or Quicksilver Quickleen Engine Treatment additive to your engine's fuel at each tank fill throughout the boating season. Use additive as directed on container.

oea1

FUEL REQUIREMENTS

Do not use pre-mixed gas and oil in this engine. Use a clean and fresh recommended gasoline during engine break-in and after engine break-in.

oeb2

GASOLINE RECOMMENDATIONS

United States and Canada

Use a major brand of automotive unleaded gasoline with a minimum posted octane rating of 87. Mid-grade automotive gasolines that contain fuel injector cleaner are preferred for added internal engine cleanliness. Leaded gasoline is not recommended.

International

Use a major brand of automotive unleaded gasoline with a minimum posted octane rating of 90RON. Automotive gasolines that contain fuel injector cleaner are preferred for added internal engine cleanliness. Leaded gasoline is not recommended. In areas where unleaded gasoline is not available, spark plug life will be substantially reduced and preignition/detonation damage to the engine may result from excessive carbon deposits in the combustion chamber.

oeb7

GASOLINE RECOMMENDATIONS (CONTINUED)

Alcohol in Gasoline

We do not recommend the use of gasoline which contains alcohol because of the possible adverse effect the alcohol may have on the fuel system. In general, if only gasoline containing alcohol is available, it must not contain more than 10% ethanol or 5% methanol, and the addition of a Water Separating Fuel Filter is recommended.

If gasoline containing alcohol is used or if you suspect the presence of alcohol in your gasoline, increase your inspection of the fuel system, visually checking for fuel leaks or abnormalities.

Gasoline containing alcohol may cause the following problems to your outboard and fuel system:

- Corrosion of metal parts.
- Deterioration of elastomers and plastic parts.
- Wear and damage of internal engine parts.
- Starting and operating difficulties.
- Vapor lock or fuel starvation.

Some of these adverse effects are due to the tendency of gasoline containing alcohol to absorb moisture from the air, resulting in a phase of water and alcohol which separates from the gasoline in the fuel tank.

The adverse effects of alcohol are more severe with methanol and are worse with increasing content of alcohol.

oec11

OIL RECOMMENDATION

Mercury or Quicksilver Optimax/DFI 2–Cycle engine oil is recommended for your engine. If Optimax/DFI 2–Cycle engine oil is not available, we recommend using Mercury or Quicksilver TC–W3 Premium Plus 2–Cycle Oil. Severe engine damage may result from use of an inferior oil.

goe9

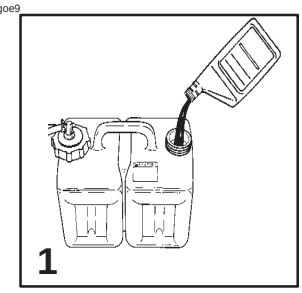

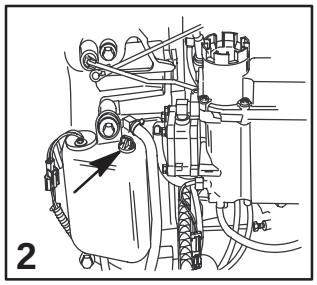

oeo2

FILLING REMOTE OIL TANK

1 Remove the filler cap and fill with the specified oil. Oil tank capacity is 3 gallons. (11.5 liters). Replace filler cap and tighten securely.

IMPORTANT: Always make sure the oil tank caps are threaded on tight. An air leak will prevent oil flow to the engine.

FILLING ENGINE MOUNTED OIL RESERVOIR TANK

Note: Filling this tank is only necessary if the oil level should ever drop and the low oil warning system is activated.

2 Remove the top cowl. Loosen the fill cap on the engine oil reservoir tank. Run the engine until all the air has been vented out of the oil reservoir tank and tank is filled with oil. Re-tighten fill cap. Stop the engine and replace the top cowl.

oee5

FILLING FUEL TANK

⚠ WARNING

Avoid serious injury or death from a gasoline fire or explosion. Always stop the engine and DO NOT smoke or allow open flames or sparks in the area while filling fuel tanks.

Fill fuel tanks outdoors away from heat, sparks, and open flames.

Remove portable fuel tanks from boat to refill them.

Always stop engine before refilling tanks.

Do not completely fill the fuel tanks. Leave approximately 10% of the tank volume unfilled. Fuel will expand in volume as its temperature rises and can leak under pressure if the tank is completely filled.

FEATURES & CONTROLS

ogb69

WARNING SYSTEM

Warning horn signals

When the key switch is turned to the ON position, the horn will turn on for a moment as a test to tell you the horn is working.

The warning horn will emit either a continuous beep or intermittent short beeps. This will alert the operator and help identify the following listed situations (see chart below). For visual display of the specific engine functions and for additional engine data, refer to SmartCraft Product information on Page 44.

Warning Horn		
Function	**Sound**	**Description**
Start up	One Beep	Normal System Test
Low Oil Reserve	Four Beeps every 2 minutes	Oil level is low in the engine mounted oil reservoir tank. Refill the engine mounted oil reservoir tank along with the remote oil tank. Refer to Fuel & Oil Section.
Water in Fuel	Four Beeps every 2 minutes	Water in the water–separating fuel filter reaches the full level. Water can be removed from the filter. Refer to Maintenance Section for filter removal.
Cooling System Problem	Continuous	Engine Guardian System is activated. Power limit will vary with level of overheat. Shift outboard into neutral and check for a steady stream of water coming out of the water pump indicator hole. If no water is coming out of the water pump indicator hole or flow is intermittent, stop engine and check water intake holes for obstruction.

FEATURES & CONTROLS

Warning Horn		
Function	**Sound**	**Description**
Oil Level is Critically Low	Continuous	Engine Guardian System is activated. Power limit will allow a fast idle. The oil level is critically low in the engine mounted oil reservoir tank. Refill the engine mounted oil reservoir tank along with the remote oil tank. Refer to Fuel and Oil Section.
Oil Pump Failure	Continuous	Engine Guardian System is activated. Power limit will allow a fast idle. The warning horn is activated if the oil pump should ever stop functioning electrically. No lubricating oil is being supplied to the engine.
Engine Overspeed	Continuous	The warning horn is activated any time engine speed exceeds the maximum allowable RPM. The system will limit the engine speed to within the allowable range. Engine overspeed indicates a condition that should be corrected. Overspeed could be caused by incorrect propeller pitch, engine height, trim angle, etc.
Sensor out of Range	Continuous	Engine Guardian System is activated. Power limit may activate at full throttle speed.
	Intermittent Beep	Engine Guardian System is activated. Power limit may restrict engine speed to idle.

ENGINE GUARDIAN SYSTEM

The Engine Guardian System monitors the critical sensors on the engine for any early indications of problems. The system will respond to a problem by emitting a continuous beep and/or reducing engine power in order to provide engine protection.

If Guardian System is activated, the system must be **RESET** before the engine will operate at higher speeds. **Moving throttle lever back to idle position resets the system.**

SMARTCRAFT PRODUCT

A Mercury SmartCraft System instrument package can be purchased for this outboard. A few of the functions the instrument package will display are engine rpm, coolant temp, battery voltage, fuel consumption and engine operating hours.

The SmartCraft instrument package will also aid in Engine Guardian diagnostics. The SmartCraft instrument package will display critical engine alarm data and potential problems.

Refer to the ***Mercury SmartCraft Operator's Supplement*** provided with the outboard for the warning functions monitored on your outboard and basic operation of the SmartCraft Instrument package.

gog142

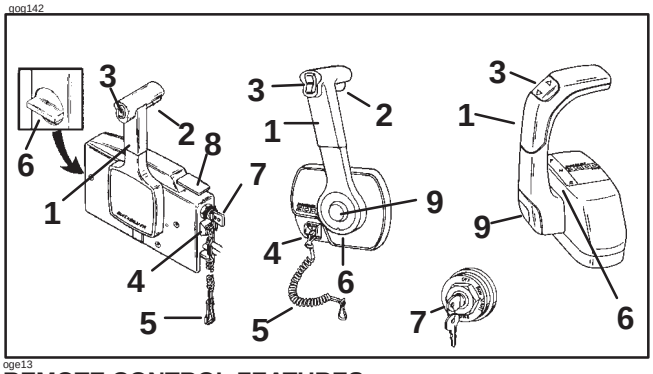

oge13

REMOTE CONTROL FEATURES

Your boat may be equipped with one of the Mercury Precision or Quicksilver remote controls shown. If not, consult your dealer for a description of the functions and operations of the remote control.

1 Control Handle – Forward, Neutral, Reverse

2 Neutral Release Lever

3 Trim/Tilt Switch (if Equipped) – Refer to Power Trim Operation.

4 Lanyard Stop Switch – Read the Lanyard Stop Switch safety explanation and Warning in the General Information Section.

5 Lanyard – Read the lanyard stop switch safety explanation and warning in the General Information Section.

6 Throttle Friction Adjustment – Console Controls require cover removal for adjustment.

7 Ignition Key Switch – Off, On, Start, Choke

8 Fast Idle Lever – Do not advance for starting engine. Raising lever after engine starts will increase engine idle speed in neutral.

9 Throttle Only Button – Do not advance for starting engine. Pushing in the button after engine starts will enable you to advance the control handle for increasing engine idle speed without shifting outboard into gear.

gog70

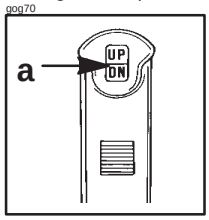

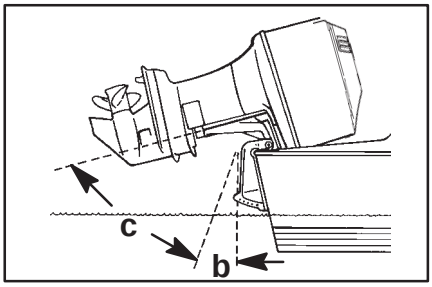

ogc24

POWER TRIM AND TILT

Your outboard has a trim/tilt control called "Power Trim." This enables the operator to easily adjust the position of the outboard by pressing the trim switch (a). Moving the outboard in closer to the boat transom is called trimming "in" or "down." Moving the outboard further away from the boat transom is called trimming "out" or "up." The term "trim" generally refers to the adjustment of the outboard within the first 205 range of travel (b). This is the range used while operating your boat on plane. The term "tilt" is generally used when referring to adjusting the outboard further up out of the water (c). With the engine turned off, the outboard can be tilted out of the water. At low idle speed, the outboard can also be tilted up past the trim range to permit, for example, shallow water operation.

osf1

POWER TRIM OPERATION

With most boats, operating around the middle of the "trim" range will give satisfactory results. However, to take full advantage of the trimming capability there may be times when you choose to trim your outboard all the way in or out. Along with an improvement in some performance aspects comes a greater responsibility for the operator, and this is being aware of some potential control hazards.

og

FEATURES & CONTROLS

The most significant control hazard is a pull or “torque” that can be felt on the steering wheel or tiller handle. This steering torque results from the outboard being trimmed so that the propeller shaft is not parallel to the water surface.

⚠ WARNING

Avoid possible serious injury or death. When the outboard is trimmed in or out beyond a neutral steering condition, a pull on the steering wheel or tiller handle in either direction may result. Failure to keep a continuous firm grip on the steering wheel or tiller handle when this condition exists can result in loss of boat control as the outboard can turn freely. The boat can now “spin out” or go into a very tight maximum turn which, if unexpected, can result in occupants being thrown within the boat or out of the boat.

Consider the following lists carefully.

Trimming In or Down Can:

1. Lower the bow.
2. Result in quicker planing off, especially with a heavy load or a stern heavy boat.
3. Generally improve the ride in choppy water.
4. Increase steering torque or pull to the right (with the normal right hand rotation propeller).
5. In excess, lower the bow of some boats to a point at which they begin to plow with their bow in the water while on plane. This can result in an unexpected turn in either direction called “bow steering” or “over steering” if any turn is attempted, or if a significant wave is encountered.

⚠ WARNING

Avoid possible serious injury or death. Adjust outboard to an intermediate trim position as soon as boat is on plane to avoid possible ejection due to boat spin-out. Do not attempt to turn boat when on plane if outboard is trimmed extremely in or down and there is a pull on the steering wheel or tiller handle.

6. In rare circumstances, the owner may decide to limit the trim in. This can be accomplished by purchasing a stainless steel tilt pin (Part Number 17-49930A1) from your dealer and inserting it in whatever adjustment hole in the transom brackets is desired. The non-stainless steel shipping bolt should not be used in this application other than on a temporary basis.

Trimming Out or Up can:

1. Lift the bow higher out of the water.
2. Generally increase top speed.
3. Increase clearance over submerged objects or a shallow bottom.
4. Increase steering torque or pull to the left at a normal installation height (with the normal right hand rotation propeller).
5. In excess, cause boat “porpoising” (bouncing) or propeller ventilation.
6. Cause engine overheating if any cooling water intake holes are above the water line.

gog62

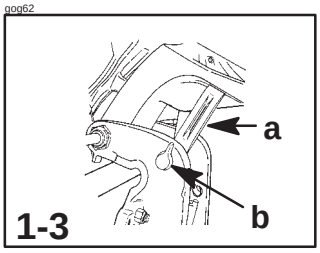

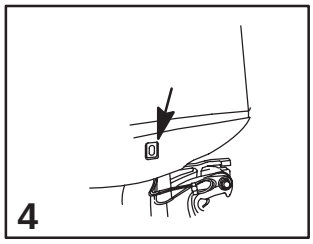

ose2

TILTING OPERATION

To tilt outboard, shut off the engine and press the trim/tilt switch or auxiliary tilt switch to the up position. The outboard will tilt up until the switch is released or it reaches its maximum tilt position.

1 Engage the tilt support lever (a), by rotating knob (b) to bring support lever upward.

2 Lower outboard to rest on the tilt support lever.

3 Disengage the tilt support lever, by raising the outboard off the support lever and rotating the lever down. Lower the outboard.

osc1

AUXILIARY TILT SWITCH

4 This switch can be used to tilt the outboard up or down using the power trim system.

og71

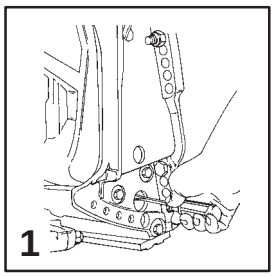

osd1

MANUAL TILTING

If the outboard cannot be tilted using the power trim/tilt switch, the outboard can be manually tilted.

1 Turn out the manual tilt release valve 3 turns (counterclockwise). This allows manual tilting of the outboard. Tilt the outboard to the desired position and tighten the manual tilt release valve.

Note: The manual tilt release valve must be tightened before operating the outboard to prevent the outboard from tilting up during reverse operation.

of

OPERATION

ofa3

PRE-STARTING CHECK LIST

- ☐ Operator knows safe navigation, boating, and operating procedures.
- ☐ An approved personal flotation device of suitable size for each person aboard and readily accessible (it is the law).
- ☐ A ring type life buoy or buoyant cushion designed to be thrown to a person in the water.
- ☐ Know your boats maximum load capacity. Look at the boat capacity plate.
- ☐ Fuel supply OK.
- ☐ Oil supply (oil injection) OK.
- ☐ Arrange passengers and load in the boat so the weight is distributed evenly and everyone is seated in a proper seat.
- ☐ Tell someone where you are going and when you expect to return.
- ☐ It is illegal to operate a boat while under the influence of alcohol or drugs.
- ☐ Know the waters and area you will be boating; tides, currents, sand bars, rocks, and other hazards.
- ☐ Make inspection checks listed in the Inspection and Maintenance Schedule. Refer to Maintenance Section.

onf2

OPERATING IN FREEZING TEMPERATURES

When using your outboard or having your outboard moored in freezing or near freezing temperature, keep the outboard tilted down at all times so the gear case is submerged. This prevents trapped water in gear case from freezing and causing possible damage to the water pump and other components.

If there is a chance of ice forming on the water, the outboard should be removed and drained completely of water. If ice should form at the water level inside the outboard drive shaft housing, it will block water flow to the engine causing possible damage.

of

OPERATION

one3

OPERATING IN SALT WATER OR POLLUTED WATER

We recommend that you flush the internal water passages of your outboard with fresh water after each use in salt or polluted water. This will prevent a buildup of deposits from clogging the water passages. Refer to “Flushing The Cooling System” procedure in the Maintenance Section.

If you keep your boat moored in the water, always tilt the outboard so the gear case is completely out of water (except in freezing temperature) when not in use.

Wash down the outboard exterior and flush out the exhaust outlet of the propeller and gear case with fresh water after each use. Each month, spray Mercury Precision or Quicksilver Corrosion Guard on external metal surfaces (do not spray on corrosion control anodes as this will reduce the effectiveness of the anodes).

ofb6

Operating at High Elevations

Your engine automatically compensates for high elevation changes. A propeller with a different pitch may be required to help reduce the normal performance loss experienced as a result of reduced oxygen in the air. Consult your dealer.

og124

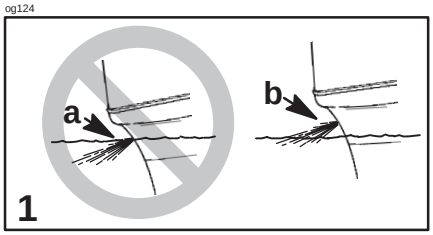

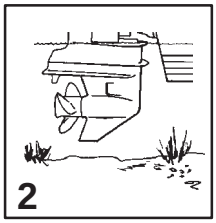

onn1

SETTING TRIM ANGLE WHILE RUNNING ENGINE AT IDLE SPEED

1 Submerging the exhaust relief hole (a) on the outboard can happen on some boats if you trim the outboard “full-in” while running the engine at idle speed. This will cause an exhaust restriction, resulting in rough idle, excessive smoke, and fouled spark plugs. If this condition exists, trim outboard up until exhaust relief hole is out of the water (b).

onk2

OPERATING IN SHALLOW WATER

2 When operating your boat in shallow water, you can tilt the outboard beyond the maximum trim range to prevent hitting bottom.

a. Reduce engine speed below 2000 RPM.

b. Tilt outboard up. Make sure all the cooling water intake holes stay submerged at all times.

c. Operate the engine at slow speed only. If engine speed exceeds 2000 RPM, the outboard will automatically return down to the maximum trim range.

ofd10

OPTIMAX ENGINE BREAK-IN PROCEDURE

Note: Do not use pre-mixed gas and oil in this engine. Use straight gasoline during engine break-in and after engine break-in.

The engine break-in procedure for Your Optimax outboard is important to ensure proper performance and maximum life from the engine. The following break-in procedure allows the internal engine parts to wear-in evenly. Incorrect engine break-in can shorten the engine life.

The engine automaticity receives extra oil during the first hours of operation. For most boaters this extra oil mode will be complete in about ten hours.

First hour

- Allow engine to warm-up for 30-60 seconds.
- Avoid continuous operation at idle speed for more then ten minutes.
- Run the engine the majority of time between 3000 and 4500 RPM approximately three quarter throttle.
- Vary engine speed; change engine speed approximately every 2 minutes.
- Avoid trimming the outboard out (up) beyond a vertical trim position during operation.
- Short bursts of full throttle for periods up to 10 seconds are acceptable.

Next three hours

- Change engine speed every 10 minutes.

** Note: It is the driver’s responsibility to always drive in a safe manner. Improper trim angle of the outboard when driving at speed can be difficult and dangerous. The purpose of specifying trim angle is to help guide the operator in determining how to put the proper load on the engine. They are intended to be guidelines and do not suggest or require unsafe boat operation.*

gof81

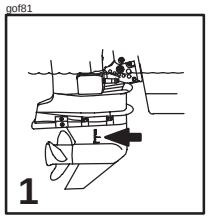

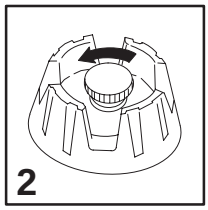

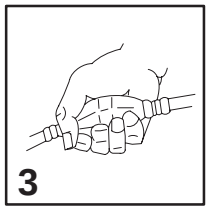

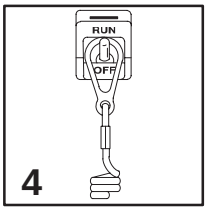

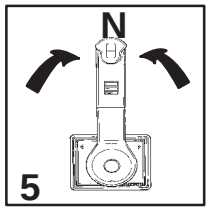

ofe38

STARTING THE ENGINE

Before starting, read the Pre-Starting Check List, Special Operating Instructions, and Engine Break-in Procedure on the first three pages in the Operation Section.

⚠ CAUTION

Never start or run your outboard (even momentarily) without water circulating through all the cooling water intake holes in the gear case to prevent damage to the water pump (running dry) or overheating of the engine.

1 Lower the outboard to the run position. Make sure all the cooling water intake holes are submerged.

2 Open fuel tank vent screw (in filler cap) on manual venting type fuel tanks.

3 Squeeze the fuel line primer bulb several times until it feels firm.

4 Set the lanyard stop switch to RUN position. Read the Lanyard Stop Switch safety explanation and Warning in the General Information Section.

5 Shift outboard to neutral (N) position.

gof82

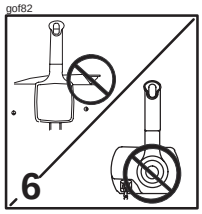

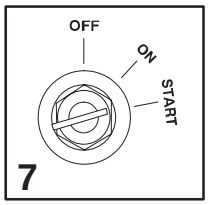

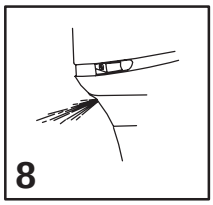

ofe49

STARTING THE ENGINE (CONTINUED)

Note: For initial start of a new engine or for an engine that ran out of fuel, or was drained of fuel, the fuel system should to be filled as follows.

- *Squeeze the fuel line primer bulb until it feels firm*
- *Turn the ignition key switch to the ON position for three seconds. This operates the electric fuel pump.*
- *Turn the ignition key switch back to the OFF position, and squeeze the primer bulb again until it feels firm. Turn the ignition key switch to the “ON” position again for three seconds. Continue this procedure until the fuel line primer bulb stays firm.*

6 Do not advance the neutral fast idle speed feature on the remote control for starting.

7 Turn the ignition key to START position. Release the key when engine starts. If engine fails to start in ten seconds, return the key to the OFF position, wait one second and try again.

Note: The electronic starting system will automatically prime (choke) the engine and increase idle speed for starting.

8 Check for a steady stream of water flowing out of the water pump indicator hole.

IMPORTANT: If no water is coming out of the water pump indicator hole, stop engine and check cooling water intake holes for obstruction. No obstruction may indicate a water pump failure or blockage in the cooling system. These conditions will cause the engine to overheat. Have the outboard checked by your dealer. Operating the engine while overheated will cause engine damage.

gof83

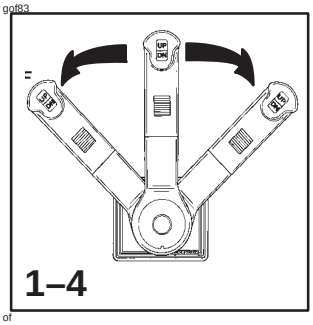

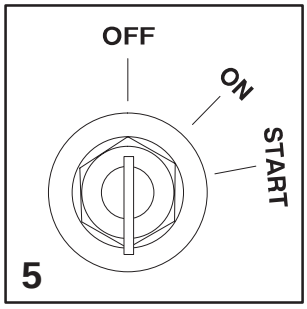

of

OPERATION

ofj11

GEAR SHIFTING

IMPORTANT: Observe the following:

- **Never shift outboard into gear unless engine speed is at idle.**
- **Do not shift outboard into Forward or Reverse when the engine is not running.**

1 Your outboard has three gear shift positions to provide operation. Forward (F), Neutral (out of gear) and Reverse (R).

2 When shifting, always stop at neutral position and allow the engine speed to return to idle.

3 Always shift outboard into gear with a quick motion.

4 After shifting outboard into gear, advance the lever further to increase speed.

STOPPING THE ENGINE

5 Reduce engine speed and shift outboard to neutral position. Turn ignition key to OFF position.

oh

MAINTENANCE

oha4

OUTBOARD CARE

To keep your outboard in the best operating condition, it is important that your outboard receive the periodic inspections and maintenance listed in the Inspection and Maintenance Schedule. We urge you to keep it maintained properly to ensure the safety of you and your passengers and retain its dependability.

⚠ WARNING

Neglected inspection and maintenance service of your outboard or attempting to perform maintenance or repair on your outboard if you are not familiar with the correct service and safety procedures could cause personal injury, death, or product failure.

Record maintenance performed in Maintenance Log at the back of this book. Save all maintenance work orders and receipts.

SELECTING REPLACEMENT PARTS FOR YOUR OUTBOARD

We recommend using original Mercury Precision or Quicksilver replacement parts and Genuine Lubricants.

⚠ WARNING

Using a replacement part that is inferior to the original part could result in personal injury, death, or product failure.

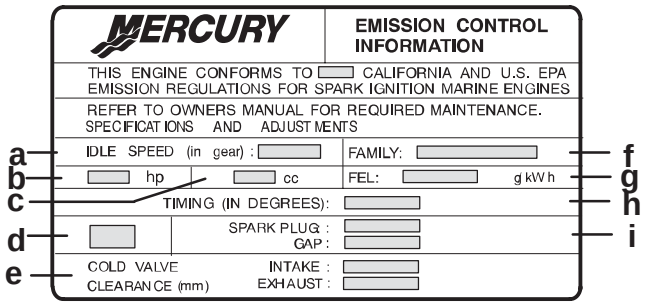

oti8

EMISSION CERTIFICATION LABEL

An emission certification label, showing emission levels and engine specifications directly related to emissions, is placed on the engine at time of manufacture.

a. Idle Speed

b. Engine Horsepower

c. Timing Specification

d. Recommended Spark Plug & Gap

e. Valve Clearance (if Applicable)

f. Family Number

g. Maximum Emission Output for the Engine Family

h. Piston Displacement

i. Date of Manufacture

oti7

OWNER RESPONSIBILITY

The owner/operator is required to have engine maintenance performed to maintain emission levels within prescribed certification standards.

The owner/operator is not to modify the engine in any manner that would alter the horsepower or allow emissions levels to exceed their predetermined factory specifications.

ohd56

INSPECTION AND MAINTENANCE SCHEDULE

Before Each Use

1. Check that lanyard stop switch stops the engine.
2. Visually inspect the fuel system for deterioration or leaks.
3. Check outboard for tightness on transom.
4. Check steering system for binding or loose components.
5. Visually check steering link rod fasteners for proper tightness. (page 18)
6. Check propeller blades for damage.

After Each Use

1. Flush out the outboard cooling system if operating in salt or polluted water. (page 17)
2. Wash off all salt deposits and flush out the exhaust outlet of the propeller and gear case with fresh water if operating in salt water.

Every 100 Hours of Use or Once yearly, Whichever occurs first

1. Lubricate all lubrication points. Lubricate more frequently when used in salt water. (page 20)
2. Replace spark plugs at first 100 hours or first year. After tht, inspect spark plugs every 100 hours or once yearly. Replace spark plugs as needed. (page 69)
3. Replace Water separating fuel filter (Page 18)
4. Replace compressor air intake filter. (Page 20)
5. Check corrosion control anodes. Check more frequently when used in salt water. (page 18)
6. Drain and replace gear case lubricant. (page 20)
7. Check power trim fluid. (page 20)
8. Inspect battery. (page 18)
9. Check control cable adjustments. *
10. Lubricate splines on the drive shaft and shift shaft.*
11. Check tightness of bolts, nuts, and other fasteners.

Every 300 Hours of Use or Three Years

1. Replace water pump impeller (more often if overheating occurs or reduced water pressure is noted).*

Before Periods of Storage

1. Refer to Storage procedure. (page 21)

∗ *These items should be serviced by an authorized dealer.*

goh107

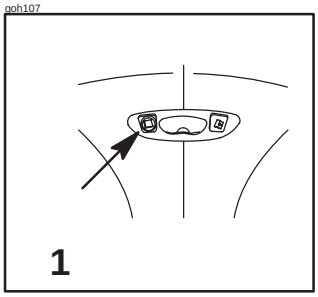

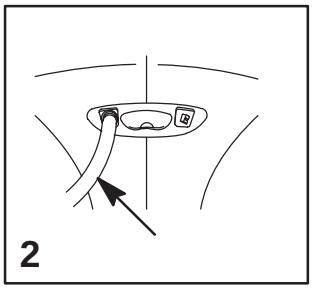

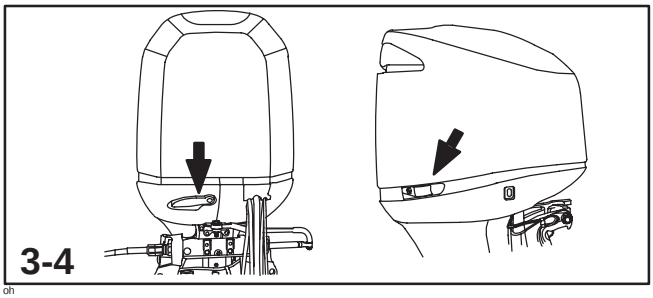

oh

MAINTENANCE

ohe12

FLUSHING THE COOLING SYSTEM

Flush the internal water passages of the outboard with fresh water after each use in salt, polluted or muddy water. This will help prevent a buildup of deposits from clogging the internal water passages.

1 Remove the plug from fitting in the bottom cowl.

2 Attach a water hose to the fitting. Turn on the water and flush for 3 to 5 minutes.

Note: Engine can be stopped or running at idle speed when flushing the cooling system. Do not flush engine using a water system that exceeds 45 psi.

ohf7

TOP COWL REMOVAL AND INSTALLATION

Removal

3 Release the front and side cowl latches. Lift the top cowl from the outboard.

Installation

4 Position the top cowl over the engine. Make sure the bottom rubber seal fits properly and lock the front and side latches.

goh111

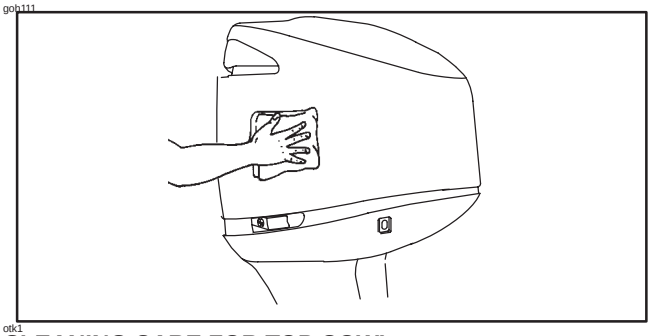

otk1

CLEANING CARE FOR TOP COWL

IMPORTANT: "Dry wiping" or wiping the plastic surface when it is dry will result in minor surface scratches. Always wet the surface before cleaning. Follow cleaning and waxing procedure.

cleaning and waxing procedure

1 Before washing, rinse the top cowl with clean water to remove dirt and dust that may scratch the surface.

2 Wash the top cowl with clean water and a mild non-abrasive soap. Use a soft clean cloth when washing.

3 Dry thoroughly with a soft clean cloth.

4 Wax the surface using a non-abrasive automotive polish (polish designed for clear coat finishes). Remove the applied wax by hand using a clean soft cloth.

ohh10

FUEL SYSTEM

⚠ WARNING

Avoid serious injury or death from gasoline fire or explosion. Carefully follow all fuel system service instructions. Always stop the engine and DO NOT smoke or allow open flames or sparks in the area while servicing any part of the fuel system.

Before servicing any part of the fuel system, stop engine and disconnect the battery. Drain the fuel system completely. Use an approved container to collect and store fuel. Wipe up any spillage immediately. Material used to contain spillage must be disposed of in an approved receptacle. Any fuel system service must be performed in a well ventilated area. Inspect any completed service work for sign of fuel leakage.

FUEL LINE INSPECTION

Visually inspect the fuel line and primer bulb for cracks, swelling, leaks, hardness, or other signs of deterioration or damage. If any of these conditions is found, the fuel line or primer bulb must be replaced.

goh120

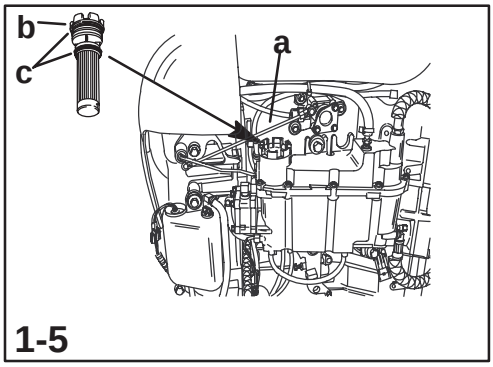

ohh25h

FUEL SYSTEM (CONTINUED)

Fuel filter replacement

Removal

1 Disconnect link rod (a).

2 Use the shaft of a screwdriver between the lugs on the filter cap and unscrew the filter (b).

Installation

3 Lubricate the O-ring seals (c) with oil.

4 Install the fuel filter and tighten securely.

5 Reconnect the link rod.

IMPORTANT: Visually inspect for fuel leakage from the fuel filter by squeezing the primer bulb until firm, forcing fuel into the chamber.

goh120

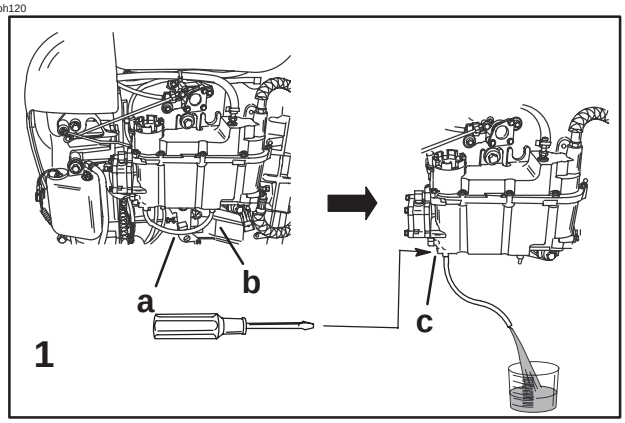

oh

MAINTENANCE

ohh26

FUEL SYSTEM (CONTINUED)
DRAINING WATER FROM THE FUEL FILTER CHAMBER

Note: If a sufficient amount of water has accumulated in the fuel filter chamber, the warning system will turn on. Draining the water from the fuel filter chamber is required.

Draining Procedure

1 Pull the drain hose (a) off the right side fitting (b). Hold the open end of the hose over a container. Loosen drain screw (c) and drain the fuel filter chamber. Re-tighten drain screw and reattach hose.

IMPORTANT: Visually inspect for fuel leakage from the drain screw by squeezing the primer bulb until firm, forcing fuel into the chamber.

goh111

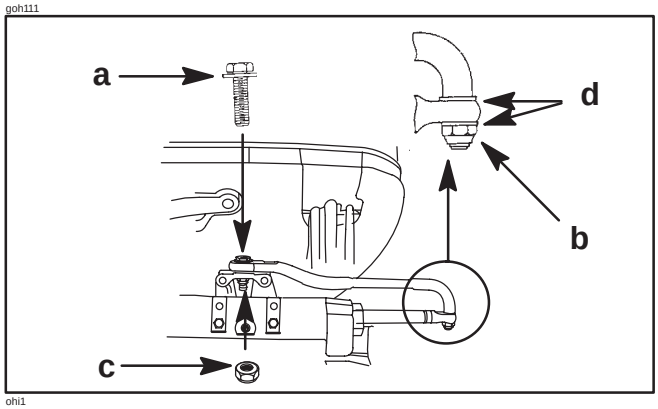

ohi1

STEERING LINK ROD FASTENERS

IMPORTANT: The steering link rod that connects the steering cable to the engine must be fastened using special washer head bolt ("a" – Part Number 10-14000) and self locking nylon insert locknuts ("b" & "c" – Part Number 11-34863). These locknuts must never be replaced with common nuts (non locking) as they will work loose and vibrate off freeing the link rod to disengage.

⚠ WARNING

Disengagement of a steering link rod can result in the boat taking a full, sudden, sharp turn. This potentially violent action can cause occupants to be thrown overboard exposing them to serious injury or death.

Assemble steering link rod to steering cable with two flat washers (d) and self locking nylon insert locknut ("b" – Part Number 11-34863). Tighten locknut (b) until it seats, then back nut off 1/4 turn.

Assemble steering link rod to engine with special washer head bolt ("a" – Part Number 10-14000) and self locking nylon insert locknut ("c" – Part Number 11-34863). First torque bolt (a) to 20 lb. ft. (27.1 N·m), then torque locknut (c) to 20 lb. ft. (27.1 N·m).

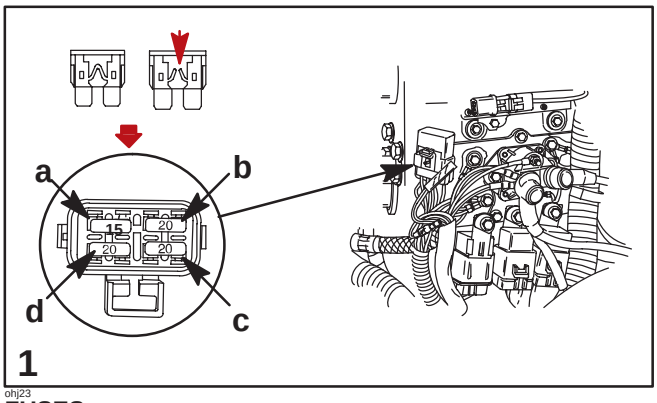

ohj23

FUSES

IMPORTANT: Always carry spare 15 and 20 AMP fuses.

The electrical wiring circuits on the outboard are protected from overload by fuses in the wiring. If a fuse is blown, try to locate and correct the cause of the overload. If the cause is not found, the fuse may blow again.

1 Open the fuse holder and look at the silver colored band inside the fuse. If band is broken, replace the fuse. Replace fuse with a new fuse with the same rating.

The fuses and circuits are identified as follows:

a. SmartCraft Data Bus Circuit – 15 AMP Fuse.

b. Accessories – 20 AMP Fuse.

c. Ignition Coil Circuit – 20 AMP Fuse.

d. Electric Fuel Pump/ECM Driver Power/Oil Pump Circuit – SFE 20 AMP Fuse.

goh150

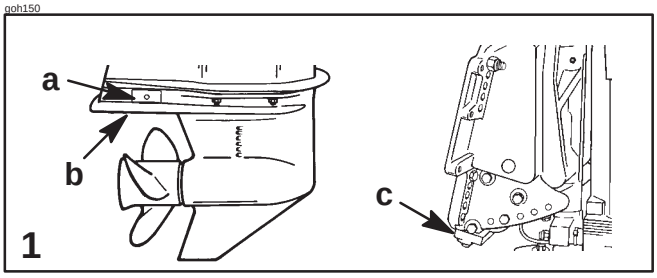

ohk5

CORROSION CONTROL ANODE

The gear case has three corrosion control anodes. Two anodes are located on the side of the gear case (a) and the third is an anode plate (b) installed underneath the anti-ventilation plate. If a trim tab should get installed, this anode plate will be removed. Another anode (c) is installed on the bottom of the transom bracket assembly. An anode helps protect the outboard against galvanic corrosion by sacrificing its metal to be slowly eroded instead of the outboard metals.

Each anode requires periodic inspection especially in salt water which will accelerate the erosion. To maintain this corrosion protection, always replace the anode before it is completely eroded. Never paint or apply a protective coating on the anode as this will reduce effectiveness of the anode.

ohn1

BATTERY INSPECTION

The battery should be inspected at periodic intervals to ensure proper engine starting capability.

IMPORTANT: Read the safety and maintenance instructions which accompany your battery.

1. Turn off the engine before servicing the battery.
2. Add water as necessary to keep the battery full.
3. Make sure the battery is secure against movement.
4. Battery cable terminals should be clean, tight, and correctly installed. Positive to positive and negative to negative.
5. Make sure the battery is equipped with a nonconductive shield to prevent accidental shorting of battery terminals.

goh122

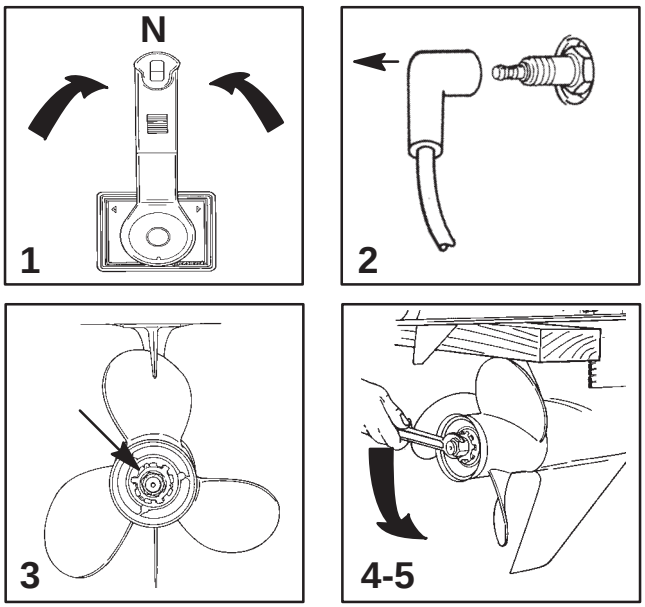

oh

MAINTENANCE

ohl40

PROPELLER REPLACEMENT

⚠ WARNING

If the propeller shaft is rotated while the engine is in gear, there is the possibility that the engine will crank over and start. To prevent this type of accidental engine starting and possible serious injury caused from being struck by a rotating propeller, always shift outboard to neutral position and remove spark plug leads when you are servicing the propeller.

1 Shift outboard to neutral (N) position.

IMPORTANT: Refer to Spark Plug Inspection and Replacement Section for correct procedure for removing spark plug leads.

2 Remove spark plug leads to prevent engine from starting.

3 Straighten the bent tabs on the propeller nut retainer.

4 Place a block of wood between gear case and propeller to hold propeller and remove propeller nut.

5 Pull propeller straight off shaft. If propeller is seized to the shaft and cannot be removed, have the propeller removed by an authorized dealer.

goh83

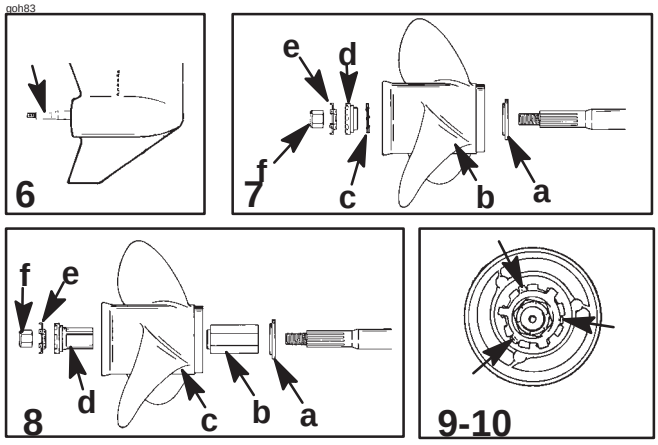

ohl35

PROPELLER REPLACEMENT

6 Coat the propeller shaft with Quicksilver or Mercury Precision Lubricants Anti-Corrosion Grease or 2-4-C Marine Lubricant with Teflon.

IMPORTANT: To prevent the propeller hub from corroding and seizing to the propeller shaft, especially in salt water, always apply a coat of the recommended lubricant to the entire propeller shaft at the recommended maintenance intervals and also each time the propeller is removed.

7 Flo-Torque I Drive Hub Propellers – Install thrust washer (a), propeller (b), continuity washer (c), thrust hub (d), propeller nut retainer (e), and propeller nut (f) onto the shaft.

8 Flo-Torque II Drive Hub Propellers – Install forward thrust hub (a), replaceable drive sleeve (b), propeller (c), thrust hub (d), propeller nut retainer (e) and propeller nut (f) onto the shaft.

9 Place a block of wood between gear case and propeller and torque propeller nut to 55 lb. ft. (75 N·m).

10 Secure propeller nut by bending three of the tabs into the thrust hub grooves.

goh14

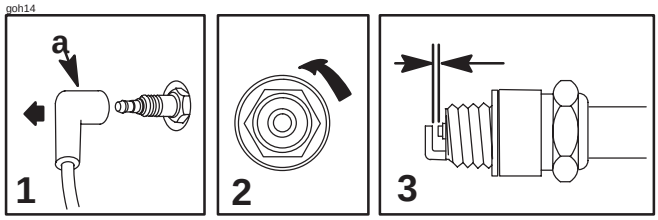

ohm16

SPARK PLUG INSPECTION AND REPLACEMENT

⚠ WARNING

Avoid serious injury or death from fire or explosion caused by damaged spark plug boots (a). Damaged spark plug boots can emit sparks. Sparks can ignite fuel vapors under the engine cowl. To avoid damaging spark plug boots, do not use any sharp object or metal tool such as pliers, screwdriver, etc. to remove spark plug boots.

1 Remove the spark plug leads by twisting the rubber boots slightly and pull off. See WARNING above.

2 Remove the spark plugs to inspect. Replace spark plug if electrode is worn or the insulator is rough, cracked, broken, blistered or fouled.

3 Set the spark plug gap. See Specification Chart in General Information Section.

4 Before reinstalling spark plugs, clean away dirt on the spark plug seats. Install plugs finger tight, and tighten 1/4 turn or torque to 20 lb. ft. (27 N·m).

goh152

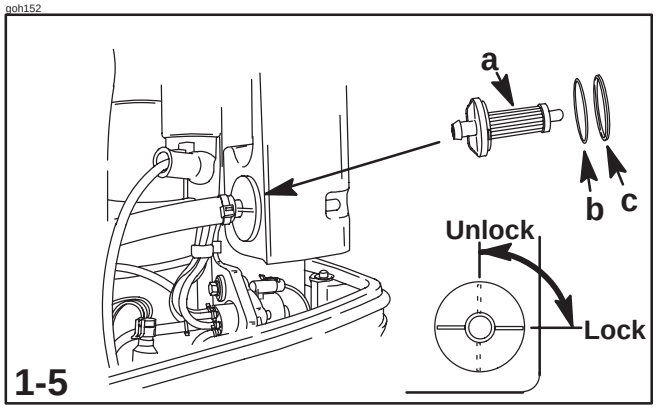

oh

MAINTENANCE

ohs5

COMPRESSOR AIR INTAKE FILTER

The filter should be changed every 100 hours of operation, or once a season. **Never run the engine without the air filter.**

REMOVAL

1 Remove the hose clamp and pull the hose off the air filter (a).

2 Rotate the filter 1/4 turn to the Unlock position to remove.

INSTALLATION

3 Place the nylon washer (b) and Rubber Washer (c) onto the filter cover.

4 Insert the filter into opening. Place the front tip of the filter into the thru hole and align the 2 tabs on the filter cover with the notches in the opening. Rotate the filter 1/4 turn to the Lock position.

5 Reinstall the hose and secure the clamp.

goh124

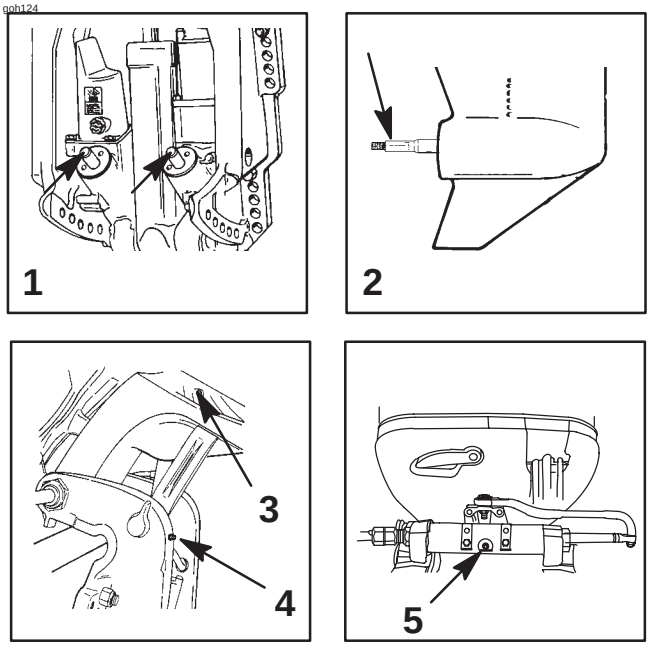

oho41

LUBRICATION POINTS

Lubricate Point 1 with Quicksilver or Mercury Precision Lubricants Special Lubricant 101.

1 Trim Rod Ball Ends – Turn the ball ends to work the lubricant into the ball sockets.

Lubricate Point 2 with Quicksilver or Mercury Precision Lubricants Anti-Corrosion Grease or 2-4-C Marine Lubricant with Teflon.

2 Propeller Shaft – Refer to Propeller Replacement for removal and installation of the propeller. Coat the entire propeller shaft with lubricant to prevent the propeller hub from corroding and seizing to the shaft.

Lubricate Points 3 thru 6 with Quicksilver or Mercury Precision Lubricants 2-4-C Marine Lubricant with Teflon or Special Lubricate 101.

3 Swivel Bracket – Lubricate through fitting.

4 Tilt Support Lever – Lubricate through fitting.

5 Tilt Tube – Lubricate through fitting.

goh217

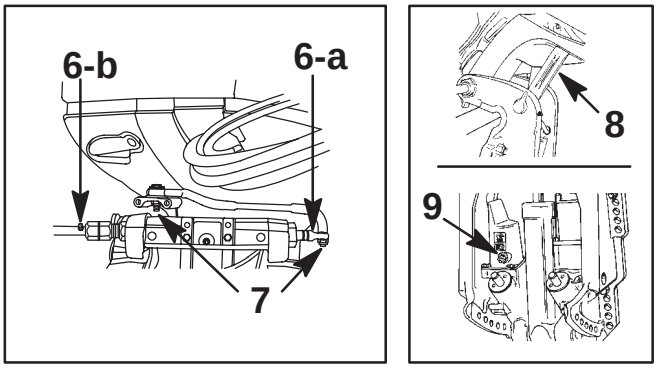

oho42

LUBRICATION POINTS (CONTINUED)

⚠ WARNING

The end of the steering cable must be fully retracted into the outboard tilt tube before adding lubricant. Adding lubricant to steering cable when fully extended could cause steering cable to become hydraulically locked. An hydraulically locked steering cable will cause loss of steering control, possibly resulting in serious injury or death.

6 Steering Cable – Rotate steering wheel to fully retract the steering cable end (a) into the outboard tilt tube. Lubricate through fitting (b).

Lubricate Points 7 With Light Weight Oil.

7 Steering Link Rod Pivot Points – Lubricate pivot points.

ohp3

CHECKING POWER TRIM FLUID

8 Tilt outboard to the full up position and engage the tilt support lock.

9 Remove fill cap and check fluid level. The fluid level should be even with the bottom of the fill hole. Add Quicksilver or Mercury Precision Lubricants Power Trim & Steering Fluid. If not available, use automotive (ATF) automatic transmission fluid.

goh126

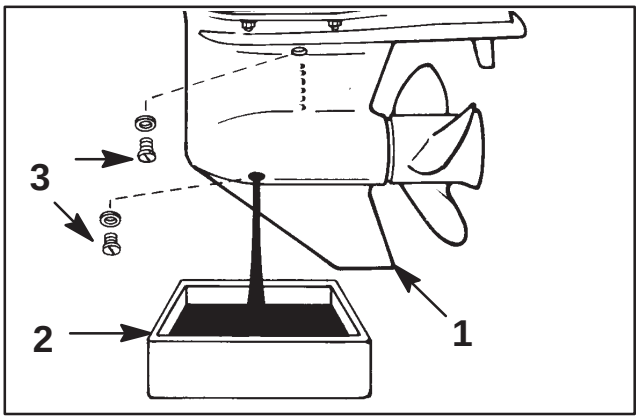

ohq14

GEAR CASE LUBRICATION

When adding or changing gear case lubricant, visually check for the presence of water in the lubricant. If water is present, it may have settled to the bottom and will drain out prior to the lubricant, or it may be mixed with the lubricant, giving it a milky colored appearance. If water is noticed, have the gear case checked by your dealer.Water in the lubricant may result in premature bearing failure or, in freezing temperatures, will turn to ice and damage the gear case.

Examine the drained gear case lubricant for metal particles. A small amount of fine metal particles indicates normal gear wear. An excessive amount of metal filings or larger particles (chips) may indicate abnormal gear wear and should be checked by an authorized dealer.

Draining Gear Case

1 Place outboard in a vertical operating position.

2 Place drain pan below outboard.

3 Remove vent plug and fill/drain plug and drain lubricant.

ohv9

Gear Case Lubricant Capacity

Gear case lubricant capacity is approximately 27 fl. oz. (798 ml).

goh116

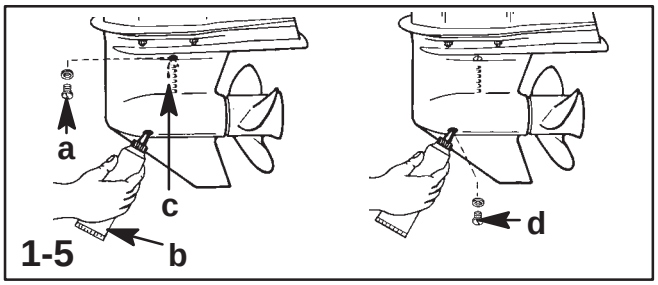

oh

MAINTENANCE

omg1

GEAR CASE LUBRICATION (CONTINUED)

Checking Gear Case Lubricant Level and Refilling Gear Case

1 Place outboard in a vertical operating position.

2 Remove vent plug (a).

3 Place lubricant tube (b) into the fill hole and add lubricant until it appears at the vent hole (c).

IMPORTANT: Replace sealing washers if damaged.

4 Stop adding lubricant. Install the vent plug and sealing washer (a) before removing the lubricant tube.

5 Remove lubricant tube and reinstall cleaned fill/drain plug and sealing washer (d).

ohr1

SUBMERGED OUTBOARD

A submerged outboard will require service within a few hours by an authorized dealer once the outboard is recovered from the water. This immediate attention by a servicing dealer is necessary once the engine is exposed to the atmosphere to minimize internal corrosion damage to the engine.

oi

STORAGE

oia2

STORAGE PREPARATION

The major consideration in preparing your outboard for storage is to protect it from rust, corrosion, and damage caused by freezing of trapped water.

The following storage procedures should be followed to prepare your outboard for out of season storage or prolonged storage (two months or longer).

⚠ CAUTION

Never start or run your outboard (even momentarily) without water circulating through all the cooling water intake holes in the gear case to prevent damage to the water pump (running dry) or overheating of the engine.

oib20

Fuel system

IMPORTANT: Gasoline containing alcohol (ethanol or methanol) can cause a formation of acid during storage and can damage the fuel system. If the gasoline being used contains alcohol, it is advisable to drain as much of the remaining gasoline as possible from the fuel tank, remote fuel line, and engine fuel system.

The most effective method for storage preparation is to add the recommended amount of Mercury Precision Fuel Stabilizer and Mercury Precision Quickleen products as described on their containers to the fuel tank before the last operation of the boat. Adding Fuel Stabilizer will help prevent the formation of varnish and gum in the gasoline. The Mercury Precision Quickleen product will help clean and lubricate the fuel injectors.

1. Portable Fuel Tank – Pour the required amount of gasoline stabilizer and Quickleen (follow instructions on containers) into fuel tank. Tip fuel tank back and forth to mix stabilizer and Quickleen with the fuel.

2. Permanently Installed Fuel Tank – Pour the required amount of gasoline stabilizer and Quickleen (follow instructions on containers) into a separate container and mix with with approximately one quart (one liter) of gasoline. Pour this mixture into fuel tank.

goh126

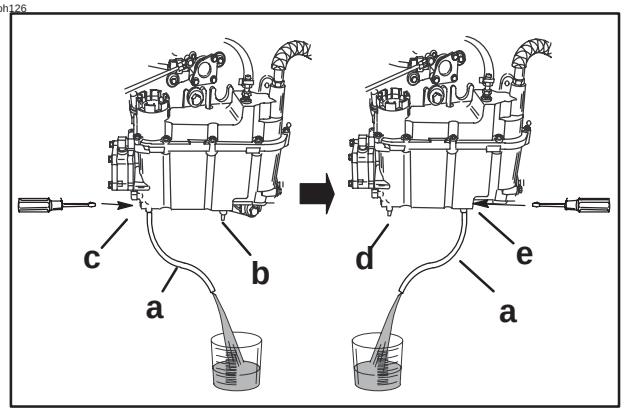

3. Pull the drain hose (a) off the right side fitting (b). Hold the open end of the hose over a container. Loosen drain screw (c) and drain the fuel filter chamber. Re-tighten drain screw and reattach hose.

4. Pull the drain hose (a) off the left side fitting (d). Hold the open end of the hose over a container and loosen drain screw (e) and drain the float chamber. Re-tighten drain screw and reattach hose to (d).

5. Premix the following in a container:
   .27 oz (8cc) or 2 teaspoons of Mercury Precision Quickleen lubricant.
   .27 oz (8cc) or 2 teaspoons of Mercury Precision Fuel Stabilizer

6. Remove the fuel filter (refer to maintenance procedure). Pour this mixture into the fuel filter opening. Reinstall the fuel filter.

7. Prime the fuel system as outlined in the “Starting Procedure”.

8. Place the outboard in water or use the flushing attachment for circulating cooling water. Start the engine and run at idle speed for 10 minutes to allow the treated fuel to fill the fuel system.

oid19

Protecting Internal Engine Components

Note: Make sure the fuel system has been prepared for storage. Refer to Fuel System on previous page.

IMPORTANT: Refer to Spark Plug Inspection and Replacement Section for correct procedure for removing spark plug leads.

1. Remove the spark plugs and add approximately one ounce (30ml) of engine oil into each spark plug hole. Rotate the flywheel manually several times to distribute the oil in the cylinders. Reinstall spark plugs.

oic4

Protecting External Outboard Components

1. Lubricate all outboard components listed in the Inspection and Maintenance Schedule.

2. Touch up any paint nicks. See your dealer for touch-up paint.

3. Spray Quicksilver or Mercury Precision Lubricants Corrosion Guard on external metal surfaces (except corrosion control anodes).

oie1

Gear Case

1. Drain and refill the gear case lubricant (refer to maintenance procedure).

oif3

Positioning Outboard for Storage

Store outboard in an upright (vertical) position to allow water to drain out of outboard.

⚠ CAUTION

If outboard is stored tilted up in freezing temperature, trapped cooling water or rain water that may have entered the propeller exhaust outlet in the gear case could freeze and cause damage to the outboard.

oig1

Battery Storage

1. Follow the battery manufacturers instructions for storage and recharging.

2. Remove the battery from the boat and check water level. Recharge if necessary.

3. Store the battery in a cool, dry place.

4. Periodically check the water level and recharge the battery during storage.

oj

TROUBLESHOOTING

ojc2

1 STARTER MOTOR WILL NOT CRANK THE ENGINE

Possible Causes

- Blown 20 Amp fuse. Check starting circuit fuse, refer to Maintenance Section.
- Outboard is not shifted to neutral position.
- Weak battery or battery connections are loose or corroded.
- Ignition key switch failure.
- Wiring or electrical connection faulty.
- Starter motor or starter solenoid failure.

2 ENGINE WILL NOT START

Possible Causes

- Lanyard stop switch not in RUN position.
- Battery not fully charged.
- Incorrect starting procedure. Refer to Operating Section.
- Old or contaminated gasoline.
- Fuel is not reaching the engine.
  a. Fuel tank is empty.
  b. Fuel tank vent not open or restricted.
  c. Fuel line is disconnected or kinked.
  d. Primer bulb not squeezed.
  e. Primer bulb check valve is faulty.
  f. Fuel filter is obstructed. Refer to Maintenance Section.
  g. Fuel pump failure.
  h. Fuel tank filter obstructed.
- Blown 20 Amp fuse. Check fuses, refer to Maintenance Section.
- Threaded connection of an air hose is loose.
- Ignition system component failure.
- Spark plugs fouled or defective. Refer to Maintenance Section.

3 ENGINE RUNS ERRATICALLY

Possible Causes

- Spark plugs fouled or defective. Refer to Maintenance Section.
- Incorrect setup and adjustments.
- Fuel is being restricted to the engine.
  a. Engine Fuel filter is obstructed. Refer to Maintenance Section.
  b. Fuel tank filter obstructed.
  c. Stuck anti-siphon valve located on permanently built in type fuel tanks.
  d. Fuel line is kinked or pinched.
  e. Injector Plugged.
- Threaded connection of an air hose is loose.
- Fuel pump failure.
- Ignition system component failure.

4 PERFORMANCE LOSS

Possible Causes

- Throttle not fully open.
- Damaged or improper size propeller.
- Boat overloaded or load improperly distributed.
- Excessive water in bilge.
- Boat bottom is dirty or damaged.

5 BATTERY WILL NOT HOLD CHARGE

Possible Causes

- Battery connections are loose or corroded.
- Low electrolyte level in battery.
- Worn out or inefficient battery.
- Excessive use of electrical accessories.
- Defective rectifier, alternator, or voltage regulator.

or

OWNER SERVICE ASSISTANCE

eor6

LOCAL REPAIR SERVICE

Always return your outboard to your local authorized dealer should the need for service arise. Only he has the certified mechanics, knowledge, special tools and equipment and the genuine parts and accessories to properly service your engine should the need occur. He knows your engine best.

eor2

SERVICE AWAY FROM HOME

If you are away from your local dealer and the need arises for service, contact the nearest authorized dealer. Refer to the Yellow Pages of the telephone directory. If, for any reason, you cannot obtain service, contact the nearest Mercury Marine Service Office.

or7

PARTS AND ACCESSORIES INQUIRES

All inquiries concerning genuine replacement parts and accessories should be directed to your local authorized dealer. The dealer has the necessary information to order parts and accessories for you. When inquiring on parts and accessories, the dealer requires the model and serial number to order the correct parts.

eor4

SERVICE ASSISTANCE

Your satisfaction with your outboard product is very important to your dealer and to us. If you ever have a problem, question or concern about your outboard product, contact your dealer or any Authorized Dealership. If additional assistance is required, take these steps.

1 *Talk with the dealership's sales manager or service manager. If this has already been done, then contact the owner of the dealership.*

2 *Should you have a question, concern or problem that cannot be resolved by your dealership, please contact Mercury Marine Service Office (International) Marine Power branch or distributor Service for assistance. They will work with your dealership to resolve all problems.*

The following information will be needed by the service office:

- Your name and address
- Daytime telephone number
- Model and serial number of your outboard
- The name and address of your dealership
- Nature of problem

Mercury Marine Service Offices are listed on the next page.

or

OWNER SERVICE ASSISTANCE

or5

MERCURY MARINE SERVICE OFFICES

For assistance, call, fax, or write. *Please include your daytime telephone number with mail and fax correspondence.*

United States		
(920) 929 - 5040	(920) 929 - 5893	Mercury Marine W6250 W. Pioneer Road, P.O. Box 1939 Fond du Lac, Wi 54936 - 1939, USA
Canada		
(905) 567–6372	(905) 567–8515	Mercury Marine Ltd. 2395 Meadowpine Blvd. Mississauga, Ontario L5N 7W6
Australia, Pacific		
(61) (3) 9791 - 5822	(61) (3) 9793 - 5880	Mercury Marine Australia 132 - 140 Frankston Road Dandenong,Vctoria 3164, Australia
Europe, Middle East, Africa		
(32) (87) 32 • 32 • 11	(32) (87) 31 • 19 • 65	Marine Power - Europe, Inc. Parc Industriel de Petit - Rechain B - 4800 Verviers, Belgium
Mexico, Central America, South America, Caribbean		
(305) 385 - 9585	(305) 385 - 5507	Mercury Marine - Latin America & Caribbean 9010 S.W. 137th Ave., Suite 226 Miami, Fl 33186 U.S.A.
Japan		
81–53–423–2500	81–53–423–2510	Mercury Marine - Japan 283–1 Anshin–cho Hamamatsu, Shizuoka, 435–0005 Japan
Asia, Singapore		
5466160	5467789	Mercury Marine Singapore 72 Loyang Way Singapore 508762

ok

MAINTENANCE LOG

oka1

Record here all maintenance performed on your outboard. Be sure to save all work orders and receipts.

Date	Maintenance Performed	Engine Hours

ok

MAINTENANCE LOG

oka1

Record here all maintenance performed on your outboard. Be sure to save all work orders and receipts.

Date	Maintenance Performed	Engine Hours