SERVICE MANUAL

TOHATSU
Outboards

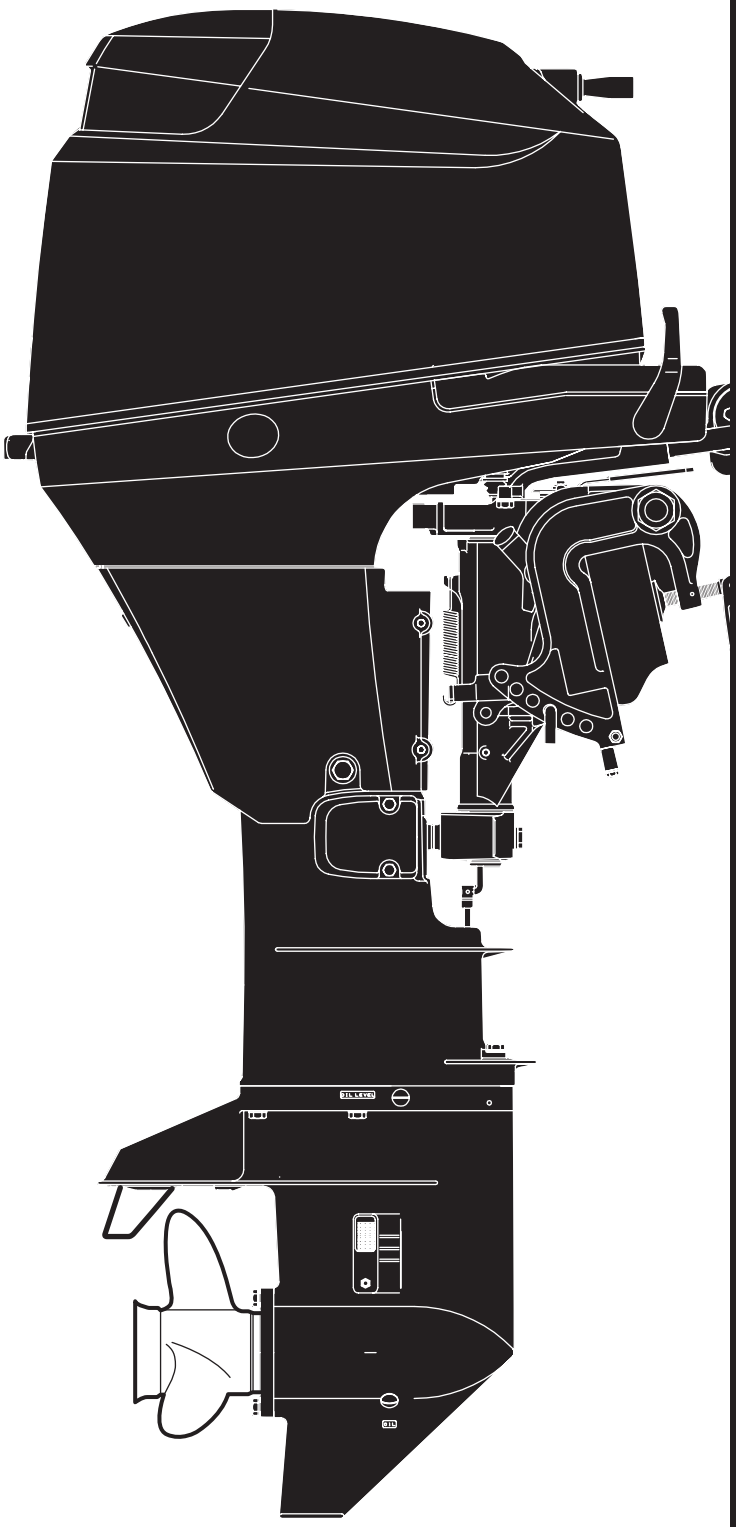

4 Stroke MFS 25/30B Models

OB No.003-21054-1
06-02 NB-2600

Introduction

Before reading this manual

This service manual provides information that is needed for inspection, service and repair of applicable outboard motors. For information about operation of the products that is not described in this document, refer to the operating instructions included in them at the delivery. For our customers' safe and comfortable use of the products for long time, it is essential to maintain the performance and quality of the outboards. To that end, the maintenance and service works have to be done properly by the service persons with fundamental knowledge and skills. We expect that this manual is utilized so that our customers can always use their outboard motors with full satisfaction.

Information for securing of safety

Safety Statements

The following safety statements are found throughout this manual and indicate information which, if ignored, could result in fatal safety hazards or property damages:

⚠ DANGER

Indicates the presence of a hazard which, if ignored, WILL result in severe injury or death.

⚠ WARNING

Indicates the presence of a hazard or an unsafe activity which, if ignored, COULD result in severe injury or death.

⚠ CAUTION

Indicates the presence of a hazard or an unsafe activity which, if ignored, COULD result in minor personal injury or damage to the products or facilities.

Provides an important one-point advice.

Description of Pictogram

The following symbols represent the contents of individual chapters.

Service Information	Service Data	Maintenance	Fuel System (Fuel Injection)
Power Unit	Lower Unit	Bracket	Electrical System
Troubleshooting	Accessories	Wiring Diagrams	

The following symbols indicate items needed for the service.

Special Tool	Lubrication Oil	Engine RPM	Tightening Torque
Specified Electrical Value	Specified Measurement Value	Use Limit	Test Run Adjustment
Specified Part			

The following symbols indicate a point to which lubrication oil, sealing agent or screw-locking agent is to be applied.

4 stroke engine oil	2 stroke engine oil	Gear oil	ATF DEXRON Ⅲ
OBM Grease	Teflon® Grease TEFLON	Low Temperature Lithium Grease LITHIUM	Insulating Grease INS
Oil Compound [Shietsu Silicon] S.O.C	[Konishi Bond] • G17	Sealing Agent [Three Bond®] • 1141C	Instant Adhesive [Three Bond®] • 1741
Screw Locking Agent [Loctite®] • 271	Screw Locking Agent [Three Bond®] • 1342	Screw Locking Agent [Three Bond®] • 1373B	

1.Service Information

1 Identification (Engine Serial Number) 1-2
2 Securing of work safety 1-2
1) Fire Prevention 1-2
2) Ventilation 1-2
3) Protection 1-2
4) Genuine Parts 1-2
5) Tools 1-3
6) Recommendations on service 1-3
7) Cautions in disassembling and assembling components ... 1-4
3 Tools and Instruments 1-5
1) Test Propeller 1-5
2) Measuring instruments 1-5
3) List of Special Tool 1-6
4 Pre-delivery Inspection 1-10
1) Steering Handle 1-10
2) Gear Shift 1-10
3) Engine Oil 1-10
4) Gear Oil 1-10
5) Fuel Line 1-11
6) Rigging 1-11
7) Inspection of PTT unit 1-11
8) Inspection of gas shock absorber 1-11
9) Inspection of starting switch and stop switch ... 1-12
10) Cooling water check port 1-13
11) Idling 1-13
12) Propeller Selection 1-13
13) Trim Tab 1-14
5 Break-in Operation 1-14
6 Test Run 1-15
7 Checks After Test Run 1-15

2.Service Data

1 Outline Dimensions 2-2
1) Engine Dimensions 2-2
2) Transom Bolts 2-3
2 Fuel Injection System 2-4
1) ECU Fuel Feed System 2-4
3 Engine Lubrication System Diagram ... 2-5
4 Cooling Water System Diagram ... 2-6
5 Specifications 2-7
6 Maintenance Data 2-10
7 Tightening Torque Data 2-18
8 Sealant Application Locations ... 2-20

3.Maintenance

1 Special Tool 3-2
2 Inspection Schedule 3-3
3 Inspection Items 3-4
1) Inspection of Top Cowl 3-4
2) Inspection of Fuel System Piping 3-4
3) Inspection of Fuel Tank 3-5
4) Inspection of Fuel Filter 3-5
5) Replacement of Engine Oil 3-6
6) Replacement of Oil Filter 3-7
7) Inspection of Gear Oil Quantity 3-8
8) Inspection of Water Pump 3-8
9) Replacement of Gear Oil 3-10
10) Inspection of Gear Case (for leakage) ... 3-11
11) Inspection of Timing Belt 3-12
12) Replacement of Timing Belt 3-13
13) Installation of Timing Belt 3-15
14) Inspection of Spark Plugs 3-17
15) Inspection of Compression Pressure ... 3-18
16) Inspection and Adjustment of Valve Clearance ... 3-19
17) Throttle Cable Adjustment of Throttle Link ... 3-20
18) Inspection of Shift Lever Gear Operations ... 3-23
19) Inspection of PTT Unit Operation 3-25
20) Inspection of Gas Assistant Unit Operations ... 3-25
21) Inspection of PTT Fluid Quantity 3-26
22) Inspection of Idle Speed 3-27
23) Inspection of Ignition Timing 3-27
24) Inspection of Anodes 3-28
25) Replacement of Anodes 3-28
26) Inspection of Propeller 3-29
27) Inspection of Thermostat 3-29
28) Inspection of Cooling Water Passage ... 3-30
29) Flushing with Water 3-31
30) Inspection of Battery 3-33
31) Greasing Points 3-34

4.Fuel System (Fuel Injection)

1 Special Tools 4-2
2 Piping Arrangement Diagram ... 4-3
Fuel Hose, Vent Hose, Breather Hose, Cooling Water Hose 4-3
3 Parts Layout 4-4
Fuel Pump, Fuel Rail, Vapor Separator ... 4-4
Intake Manifold 4-7
Magneto & ECU 4-8
Electric Parts 4-9
Separate Fuel Tank 4-11
4 ECU System 4-12
(1) Configuration of ECU System ... 4-12
1) Sensors 4-13
2) Actuators 4-15
3) Control System (ECU) 4-16
(2) Control System 4-16
(3) Fuel Injection Control 4-17
1) Fuel Injection Timing 4-17
2) Starting Fuel Increase Correction 4-18
3) Acceleration Fuel Increase Correction ... 4-18
4) Deceleration Fuel Decrease Correction ... 4-18
5) Correction Based On Intake Air Temperature ... 4-18
6) Correction Based On Cylinder Cooling Water Temperature ... 4-18
(4) Control of Fuel Feed Pump (FFP) ... 4-18
(5) Control of Tachometer 4-18
(6) Warning Buzzer and Lamp (LED),and Control of Engine Revolution Speed 4-19
1) Locations of warning buzzer and lamp (LED) ... 4-19
2) Warning notification, abnormality and action to be taken ... 4-19

5 Ignition System ····· 4-20
(1) Configuration of Ignition System ··· 4-20
(2) Ignition Control ····· 4-21
1) Ignition Timing Controls ····· 4-21
2) Ignition and Combustion Orders ····· 4-21
3) Ignition Timing ····· 4-21
4) Operations ····· 4-21
(3) Fuel Feed System ····· 4-22
6 Components of Fuel Feed System ··· 4-23
1) Fuel Pump (Low Pressure Mechanical Pump) ··· 4-23
2) Vapor Separator ····· 4-23
3) Fuel Regulator ····· 4-24
4) Fuel Cooler ····· 4-24
7 Outline of Fuel Injection System ··· 4-25
1) Air Intake System ····· 4-25
8 Inspection Items ····· 4-26
1) Inspection of Fuel Supply System Piping ··· 4-26
2) Inspection of Filter ····· 4-26
3) Inspection of Fuel Pump ····· 4-28
4) Inspection of Fuel Connector ····· 4-28
5) Measuring fuel pressure ····· 4-29
6) Inspection of Fuel Regulator ····· 4-30
7) Draining Fuel ····· 4-31
8) Disassembly of Vapor Separator ····· 4-31
9) Inspection of Vapor Separator ····· 4-32
10) Reassembly of Vapor Separator ····· 4-33
11) Inspection of ISC (Idle Speed Control) ····· 4-33
12) Inspection of Idle Speed ····· 4-33

5.Power Unit

1 Special Tools ····· 5-2
2 Parts Layout ····· 5-3
Engine ····· 5-3
Recoil Starter ····· 5-4
Magneto & ECU ····· 5-5
Electric Parts ····· 5-6
Fuel Pump, Fuel Rail, Vapor Separator ····· 5-8
Intake Manifold ····· 5-11
Cam Shaft & Oil Pump ····· 5-12
Cylinder Head ····· 5-13
Intake Valve & Exhaust Valve ····· 5-14
Cylinder ····· 5-15
Piston & Crankshaft ····· 5-16
Top Cowl ····· 5-17
3 Inspection Items ····· 5-18
1) Inspection of Compression Pressure ····· 5-18
2) Inspection of Oil Pressure ····· 5-19
3) Inspection of Valve Clearance ····· 5-20
4) Removing Power Unit ····· 5-22
5) Removing Timing Belt and Pulley ····· 5-25
6) Inspection of Timing Belt ····· 5-26
7) Installation of Pulley and Timing Belt ····· 5-27
8) Removing Cylinder Head ····· 5-30
9) Inspection of Valve Spring ····· 5-32
10) Inspection of Valve ····· 5-33
11) Inspection of Valve Guide ····· 5-33
12) Inspection of Valve Seat ····· 5-34
13) Correction of Valve Seat ····· 5-35
14) Inspection of Rocker Arm and Rocker Arm Shaft ··· 5-37
15) Inspection of Cam Shaft ····· 5-38
16) Inspection of Cylinder Head ····· 5-39
17) Inspection of Oil Pump ····· 5-40
18) Installation of Valves ····· 5-41
19) Installation of Cam Shaft ····· 5-42
20) Installation of Rocker Arm Shaft ····· 5-42
21) Installation of Oil Pump ····· 5-43
22) Installation of Cylinder Head ····· 5-44
23) Disassembly of Cylinder Block ····· 5-45
24) Inspection of Piston Outer Diameter ··· 5-46
25) Inspection of Cylinder Inner Diameter ··· 5-46
26) Inspection of Piston Clearance ····· 5-46
27) Inspection of Piston Ring Side Clearance ··· 5-47
28) Inspection of Piston Rings ····· 5-47
29) Inspection of Piston Pins ····· 5-48
30) Inspection of Connecting Rod Small End Inner Diameter ··· 5-48
31) Inspection of Connecting Rod Big End Side Clearance ··· 5-48
32) Inspection of Crankshaft ····· 5-49
33) Inspection of Crank Pin Oil Clearance ··· 5-50
34) Inspection of Crank shaft Main Journal Oil Clearance ··· 5-51
35) Inner Diameter of Cylinder/Crank Case Bearing Holder (Inner Diameter Code) ··· 5-52
36) Thickness of Bearing (Color of Inner Diameter Code) ··· 5-52
37) Assembling Piston and Connecting Rod ··· 5-53
38) Installation of Power Unit ····· 5-57
39) Removing Recoil Starter ····· 5-59
40) Disassembly of Recoil Starter ····· 5-59
41) Inspection of Recoil Starter ····· 5-60
42) Installation of Recoil Starter ····· 5-61

6.Lower Unit

1 Special Tools ····· 6-2
2 Parts Layout ····· 6-4
Gear Case ····· 6-4
Drive System & Water Pump ····· 6-5
Shift ····· 6-7
3 Inspection Items ····· 6-8
1) Draining Gear Oil ····· 6-8
2) Removing Propeller ····· 6-8
3) Removing Lower Unit ····· 6-9
4) Disassembly of Water Pump ····· 6-9
5) Inspection of Water Pump ····· 6-10
6) Removing Propeller Shaft Housing Ass'y ··· 6-10
7) Disassembly of Propeller Shaft Ass'y ··· 6-11
8) Inspection of Propeller Shaft ····· 6-11
9) Assembly of Propeller Shaft Ass'y ····· 6-11
10) Disassembly of Propeller Shaft Housing ··· 6-12
11) Inspection of Propeller Shaft Housing ··· 6-13
12) Assembly of Propeller Shaft Housing ··· 6-14
13) Removing Pump Case (Lower) ····· 6-15
14) Disassembly of Pump Case (Lower) ··· 6-15
15) Assembly of Pump Case (Lower) ····· 6-15
16) Removing Clutch Cam and Cam Rod ··· 6-15
17) Disassembly of Clutch Cam and Cam Rod ··· 6-15
18) Inspection of Cam Rod and Clutch Cam ··· 6-16

19) Assembly of Cam Rod and Clutch Cam ··· 6-16
20) Removing Drive Shaft ··· 6-16
21) Disassembly of Drive Shaft ··· 6-16
22) Inspection of Drive Shaft ··· 6-17
23) Disassembly of Forward Gear (A Gear) ··· 6-17
24) Inspection of Pinion Gear (B Gear)and Forward Gear (A Gear) ··· 6-17
25) Assembly of Forward Gear (A Gear) ··· 6-17
26) Assembly of Drive Shaft ··· 6-18
27) Disassembly of Gear Case ··· 6-18
28) Inspection of Gear Case ··· 6-19
29) Assembly of Lower Unit ··· 6-19
30) Installation of Pinion Gear (B Gear) ··· 6-20
31) Settling Pinion Gear (B Gear) Height ··· 6-21
32) Settling Forward Gear (A Gear) Backlash ··· 6-24
33) Reassembly of Pinion Gear Nut (B Gear Nut) ··· 6-27
34) Assembly of Propeller Shaft Housing ··· 6-27
35) Reassembly of Pump Case (Lower) ··· 6-28
36) Assembly of Water Pump ··· 6-28
37) Installation of Lower Unit ··· 6-30

7.Bracket

1 Special Tools ··· 7-2
2 PTT Wiring and Layout Diagram ··· 7-3
3 Parts Layout ··· 7-4
Drive Shaft Housing ··· 7-4
Swivel Bracket (Mechanical Tilt) ··· 7-5
Clamp Bracket & Reverse Lock ··· 7-6
Bracket, PTT & Gas Assistant ··· 7-7
Power Trim & Tilt ··· 7-9
Tiller Handle ··· 7-10
Bottom Cowl ··· 7-11
Shift ··· 7-12
4 Inspection Items ··· 7-14
1) Inspection of Throttle Cable ··· 7-14
2) Installation of Tiller Handle ··· 7-14
3) Adjustment of Co-pilot Plate ··· 7-15
4) Removing Drive Shaft Housing ··· 7-16
5) Pulling Out Upper Mount ··· 7-17
6) Disassembly of Drive Shaft Housing ··· 7-17
7) Inspection of Oil Strainer ··· 7-18
8) Assembly of Drive Shaft Housing ··· 7-18
9) Installation of Drive Shaft Housing Ass'y ··· 7-19
10) Removing Steering Shaft ··· 7-20
11) Installing Steering Shaft ··· 7-20
12) Removing Clamp Bracket (PTT or Gas Assistant Model) ··· 7-21
13) Removing Clamp Bracket (Mechanical Tilt Model) ··· 7-21
14) Installation of Clamp Bracket (PTT or Gas Assistant Model) ··· 7-22
15) Installation of Clamp Bracket (Mechanical Tilt Model) ··· 7-23
16) Removing PTT Unit/Gas Shock Absorber ··· 7-24
17) Removing PTT Motor ··· 7-25
18) Removing PTT Pump and Valves ··· 7-25
19) Inspection of PTT Pump and Valves ··· 7-25
20) Removing Tilt Cylinder ··· 7-26
21) Inspection of Tilt Cylinder ··· 7-26
22) Inspection of Valve ··· 7-27
23) Installation of PTT Pump and Motor ··· 7-27
24) Assembly of Tilt Cylinder ··· 7-28
25) Air-Purging PTT Unit (separated from outboard motor) ··· 7-30
26) Installation of PTT Unit/Gas Shock Absorber ··· 7-32
27) Air-Purging PTT Unit (installed on the outboard motor) ··· 7-33
28) Inspection of PTT Solenoid ··· 7-34
29) Inspection of PTT Switch ··· 7-35

8.Electrical System

1 Special Tools ··· 8-2
2 Electrical Component Layout ··· 8-3
Port Side View ··· 8-3
Bow Side View ··· 8-4
Starboard Side View ··· 8-5
Top View ··· 8-6
Tiller Handle Model ··· 8-7
3 Parts Layout ··· 8-8
Magneto & ECU ··· 8-8
Electric Parts ··· 8-9
Starter Motor ··· 8-11
Fuel Pump, Fuel Rail, Vapor Separator ··· 8-12
4 Ignition System, Ignition Control System ··· 8-14
1) Inspection of Ignition Sparks ··· 8-14
2) Inspection of Plug Cap ··· 8-14
3) Inspection of Ignition Coils ··· 8-15
4) Inspection of Alternator ··· 8-15
5) Inspection of Pulser Coil ··· 8-16
6) Inspection of Oil Pressure Switch ··· 8-16
7) Inspection of Water Temperature Sensor ··· 8-17
8) Inspection of Neutral Switch (Tiller Handle Model) ··· 8-17
9) Inspection of Start Switch (Tiller Handle Model) ··· 8-17
10) Inspection of Stop Switch ··· 8-18
5 Fuel Control System ··· 8-19
1) Inspection of Injectors ··· 8-19
2) Inspection of ISC Valve ··· 8-19
3) Inspection of MAT (Manifold Temperature) Sensor ··· 8-20
4) Inspection of Fuel Feed Pump (FFP) ··· 8-20
5) Inspection of Throttle Position Sensor ··· 8-20
6 Starting System ··· 8-21
1) Inspection of Fuse ··· 8-21

2) Inspection of Starter Solenoid ····· 8-21
3) Disassembly of Starter Motor ····· 8-21
4) Inspection of Starter Motor Pinion ····· 8-22
5) Inspection of Armature ····· 8-22
6) Inspection of Brushes ····· 8-23
7) Inspection of Starter Motor Operation ····· 8-23
7 Battery Charging System ····· 8-24
1) Inspection of Alternator ····· 8-24
2) Inspection of Rectifier ····· 8-24
8 ECU Coupler ····· 8-25

9.Troubleshooting

1 Troubleshooting List ····· 9-2
2 Power Unit ····· 9-3
State 1 : Engine will not start or is a little hard to start. ··· 9-3
Starting System ····· 9-3
Ignition System ····· 9-5
Fuel System ····· 9-7
State 2 : Full throttle engine revolution speed is low. Engine revolution speed fall off.Engine stalls ··· 9-9
Ignition System ····· 9-10
Fuel System ····· 9-11
Lubrication System ····· 9-12
Cooling System ····· 9-13
State 3 : Engine rotation is unstable or hunting occurs in low speed range. ····· 9-14
Ignition System ····· 9-15
Fuel System ····· 9-16
3 PTT Unit ····· 9-17
State 1 : PTT will not operate. ····· 9-17
State 2 : PTT is not capable of sustaining outboard motor. ··· 9-18
4 3AC Diagnosis ····· 9-19
1.Set Up ····· 9-19
1) Software Install ····· 9-20
2) If putting CD into CD drive will not cause installation software to start. ····· 9-21
3) Diagnosis File Information ····· 9-21
2.Hardware Connection ····· 9-22
1) Preparation ····· 9-22
3.Position of ON/OFF switch for function test and running (Drop) test ····· 9-23
4.Operating Procedure ····· 9-24
1) Start Up ····· 9-24
2) Menu Selection ····· 9-24
3) Preface and Introduction ····· 9-24
4) Setting Communication (COM) Port ····· 9-25
5) Monitoring ECU data ····· 9-26
6) Monitoring History and failure code retrieval ··· 9-27
7) Function Test ····· 9-28
8) Running Test (Drop Test) ····· 9-29
9) Air Purging from high pressure fuel circuit ····· 9-30
10) Explanation of Error Code ····· 9-31
11) Exit Diagnostic ····· 9-31

10.Accessories

1 Remote Control Components ····· 10-2
1) Installation of Remote Control Cable (Engine Side) Remote Control Model ····· 10-2
2 Installation of Meters and Battery ··· 10-5
1) Installation of Meters ····· 10-5
2) Installation of Battery ····· 10-5
3) Wiring Diagram of Remote and Control Meters ··· 10-6
3 Operation ····· 10-7
1) Warning Indication ····· 10-7

11.Wiring Diagram

1 Wiring Chart ····· 11-2
2 MF/MFG Model ····· 11-3
3 EF/EFG/EFT Model ····· 11-4
4 EP/EPG/EPT Model ····· 11-5

INDEX

1 Service Information

2 Service Data

3 Maintenance

4 Fuel System (Fuel Injection)

5 Power Unit

6 Lower Unit

7 Bracket

8 Electrical System

9 Troubleshooting

10 Accessories

11 Wiring Diagrams

1

Service Information

1 Identification (Engine Serial Number) 1-2
2 Securing of work safety 1-2
1) Fire Prevention 1-2
2) Ventilation 1-2
3) Protection 1-2
4) Genuine Parts 1-2
5) Tools 1-3
6) Recommendations on service 1-3
7) Cautions in disassembling and assembling components 1-4
3 Tools and Instruments 1-5
1) Test Propeller 1-5
2) Measuring instruments 1-5
3) List of Special Tool 1-6
4 Pre-delivery Inspection 1-10
1) Steering Handle 1-10
2) Gear Shift 1-10
3) Engine Oil 1-10
4) Gear Oil 1-10
5) Fuel Line 1-11
6) Rigging 1-11
7) Inspection of PTT unit 1-11
8) Inspection of gas shock absorber 1-11
9) Inspection of starting switch and stop switch 1-12
10) Cooling water check port 1-13
11) Idling 1-13
12) Propeller Selection 1-13
13) Trim Tab 1-14
5 Break-in Operation 1-14
6 Test Run 1-15
7 Checks After Test Run 1-15

Service Information

1. Identification (Engine Serial Number)

Engine serial number is stamped on the bottom cowl of outboard motor body.

① Model Name

② Model Type

③ Serial Number

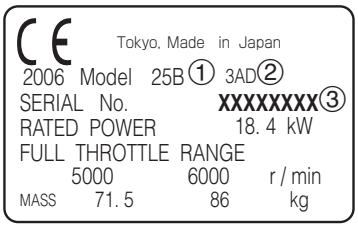

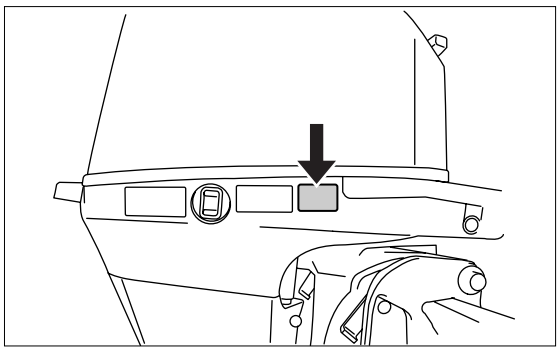

2. Securing of work safety

1) Fire Prevention

Gasoline is hazardous material and very flammable. Do not handle gasoline near ignition source such as spark or static electricity.

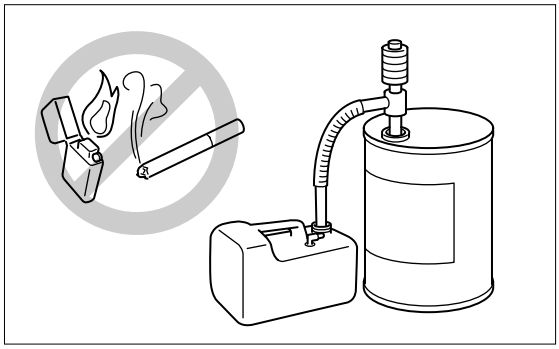

2) Ventilation

Exhaust gas or gasoline vapor is hazardous for human health. Be sure to ventilate well when working indoors.

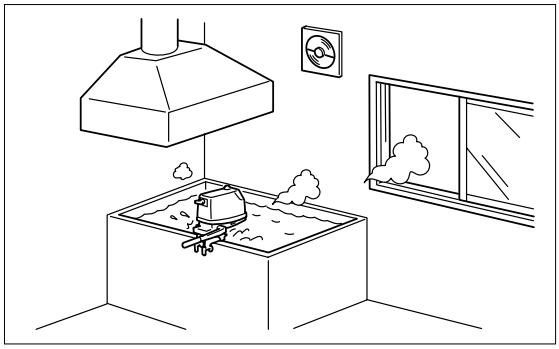

3) Protection

Wear a pair of goggles, working gloves and safety shoes to protect human body from chemicals and oils and eyes from particles generated by grinding or polishing works. Avoid adhesion of matters such as oil, grease or sealing agent to the skin. In case of exposure to such matters, wash away with soap or warm water immediately.

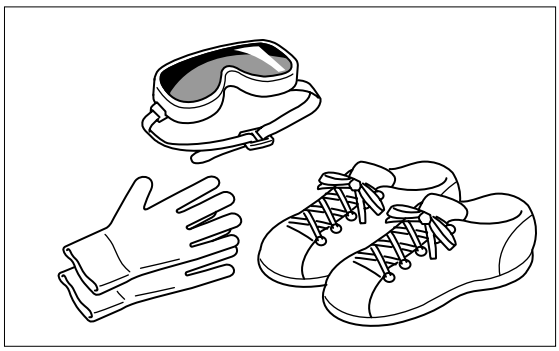

4) Genuine Parts

Use parts and/or chemicals that are genuine items or recommended.

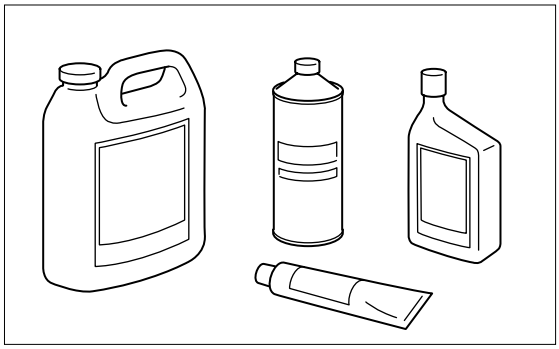

5) Tools

Use specified special tools to prevent damaging to parts and to perform work safely and surely. Be sure to follow installation procedures described in this manual and use tightening torque specified.

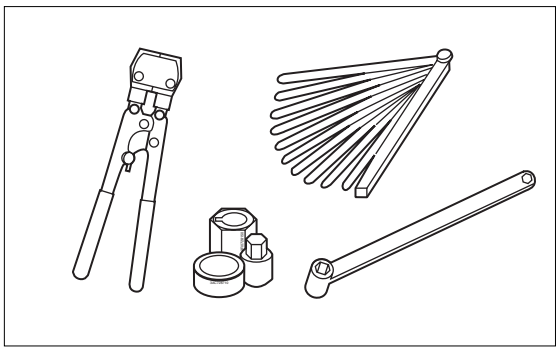

6) Recommendations on service

Remove foreign substances and dirt from outboard motor body and individual parts by cleaning. Apply recommended oil or grease to rotating areas and sliding surfaces. After individual works, always perform verifications such as ensuring smooth movement and sealing.

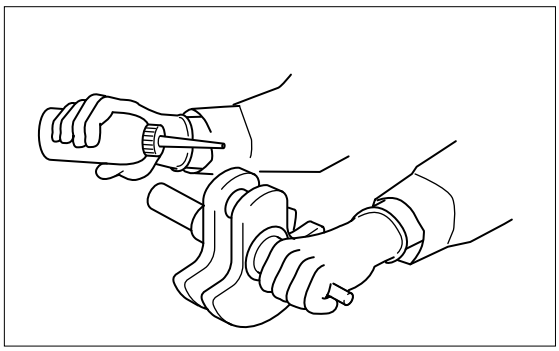

7) Cautions in disassembling and assembling components

(1) Secure outboard motor to dedicated stand firmly.

(2) Take special care not to scratch painted surface or mating surfaces of cylinder and crankcase.

(3) Replace unreusable parts such as packings, gaskets, O rings, oil seals, spring pins or split pins with new ones after they were removed . Replace deformed snap rings with new ones.

(4) When replacing parts, be sure to use genuine parts. For fluids such as gear oil, use genuine product.

(5) Be sure to use special tools that are specified, and perform the works properly.

(6) When reassembling parts, use their mating marks. For parts without mating marks, simple marking makes reassembling easier. Use applicable parts list for reference.

(7) Clean individual parts that have been removed, and check their conditions.

(8) When reassembling parts, take sufficient care also for details such as fits, repair limits, air tight, clogging of oil holes for lubrication and greasing, packings, wirings and piping. For components using many bolts and nuts for assembling, such as cylinder head and crankcase, tighten all the fasteners evenly to their specified torques clockwise in two or three stages, inner ones first and then outer ones. (Reverse the order when disassembling.)

(9) When installing bearings, face the flat (numbered) side to the special assembling tool.

(10) When installing oil seals, be careful not to scratch the surface of the lip that contacts with the shaft, and install them in correct orientation. Apply recommended grease to the lip before installation.

(11) When applying liquid packing, take sufficient care for the thickness and quantity. Excessive application may be oozed out, adversely affecting interior of the crankcase. Use adhesive after thoroughly reading the instructions.

(12) When servicing power unit, use of wooden work board makes the work easier.

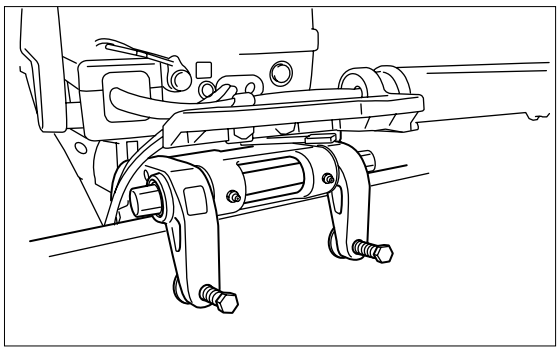

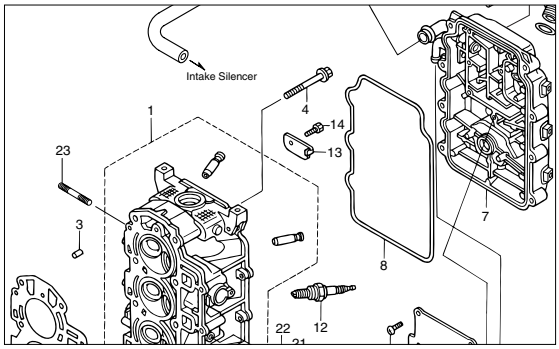

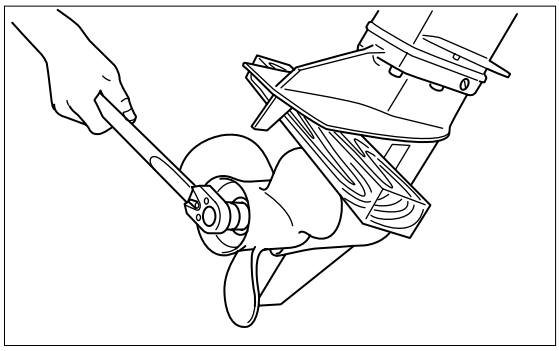

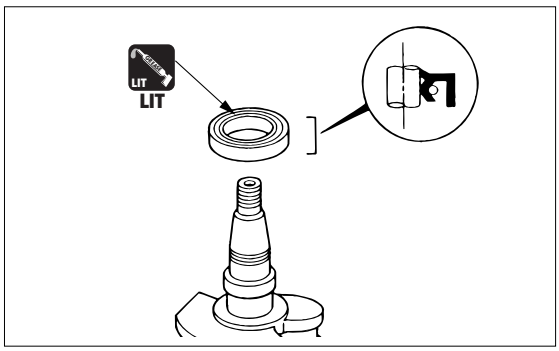

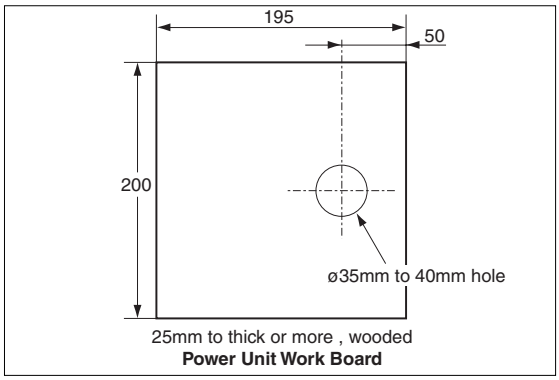

3. Tools and Instruments

1) Test Propeller

P/N. 3R0-64111-0

Outer diameter : 223mm

With : 11.5mm

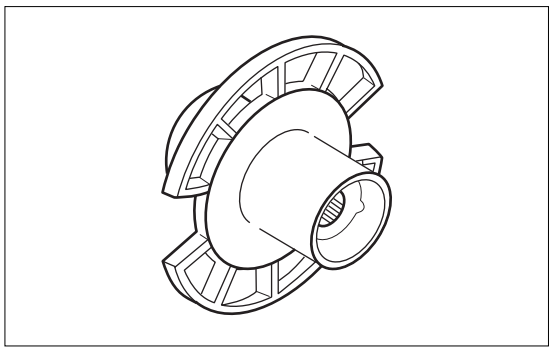

Outboard motor model	Rotational speed at WOT (Wide Open Throttle) (r/min)
25 B	approximately 5,200
30 B	approximately 5,700

2) Measuring instruments

For the following measuring instruments, use commercially available ones.

Circuit tester	(Resistance : 1Ω, 10Ω, 10 kΩ, AC voltage : 30 to 300V, DC voltage : 30V)
Vernier calipers	(M1 type, 300 mm)
Micrometer	(minimum graduation of 0.01, outer, 0 to 25 mm, 25 to 50 mm, 50 to 75 mm)
Cylinder gauge	(4 to 6 mm, 10 to 25 mm, 25 to 30 mm, 50 to 75 mm)
Ring gauge	(ø5.5, ø16, ø25, ø30, ø61)
Dial gauge	(minimum graduation of 0.01)
Thickness gauge	(0.03 to 0.3 mm)
V block	
Surface plate	(500 mm x 500 mm)
Dial gauge magnet base or dial gauge stand	

3) List of Special Tool

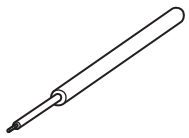	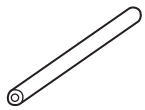	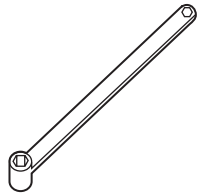	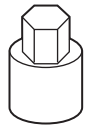
Spring Pin Tool A P/N. 345-72227-0	Spring Pin Tool B P/N. 345-72228-0	Bevel Gear B Nut Wrench P/N. 346-72231-0	Bevel Gear B Nut Socket P/N. 346-72232-0
Removing spring pin	Installing spring pin	Removing/installing Pinion Nut (B Gear Nut)	
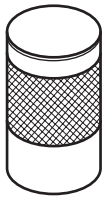	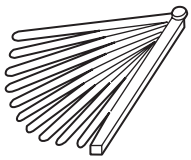	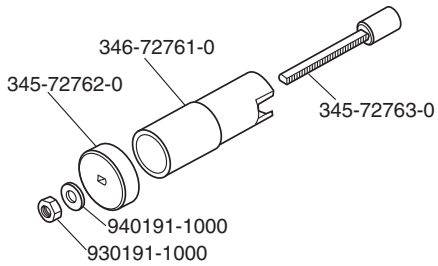	
Bevel Gear Bearing Installation Tool P/N. 346-72719-0	Thickness Gauge P/N. 353-72251-0	Mount Puller Kit P/N. 361-72760-0	
Installing forward gear (A gear) bearing	Measuring gaps	Removing upper mount	
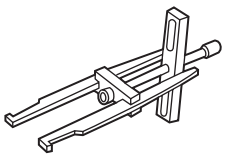		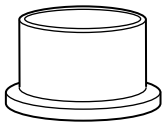	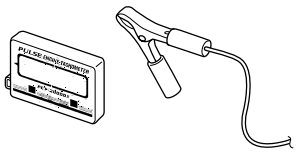
Bevel Gear Bearing Puller Ass'y P/N. 3A3-72755-0	Piston Slider P/N. 3AC-72871-0	Bearing Installation Tool P/N. 3AC-99900-0	Tachometer P/N. 3AC-99010-0
Removing forward gear (A gear) bearing outer race	Installing piston	Installing drive shaft bearing	Measuring engine revolution speed
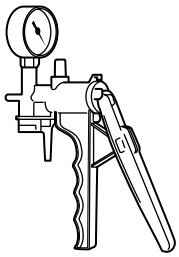	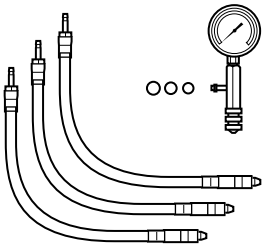	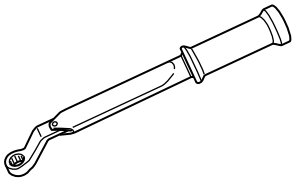	
Vacuum/Pressure Gauge P/N. 3AC-99020-0	Compression Gauge P/N. 3AC-99030-0	Torque Wrench P/N. 3AC-99070-0	Valve Clearance Driver P/N. 3AC-99071-0
Inspecting pressure	Measuring compression pressure	Adjusting valve clearance	Adjusting valve clearance

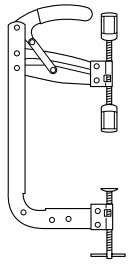	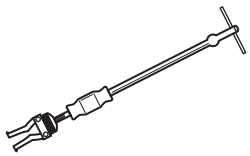	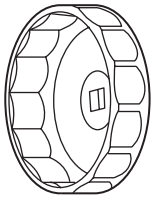	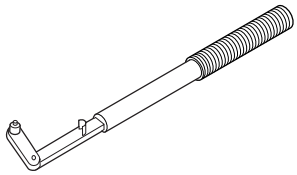
Valve Spring Compressor P/N. 3AC-99075-0	Slide Hammer Kit P/N. 3AC-99080-0	Oil Filter Wrench P/N. 3AC-99090-0	Flywheel Holder P/N. 3AC-99200-0
Removing/installing valve spring	Removing forward gear (A gear) bearing outer race	Removing/installing oil filter	Removing/installing flywheel nut
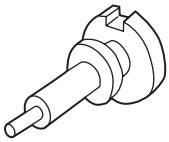	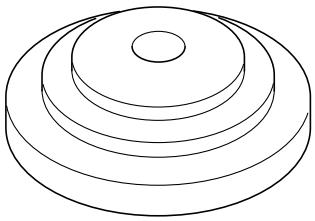		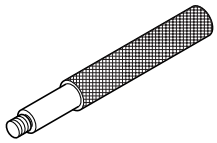
Shimming Gauge P/N. 3AC-99250-0	Center Plate P/N. 3AC-99701-0		Driver Rod P/N. 3AC-99702-0
Measuring pinion gear (B gear) height	Used with driver rod and needle bearing attachment Positioning propeller shaft housing needle bearing		Used with center plate and needle bearing attachment
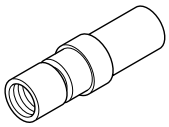		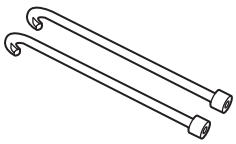	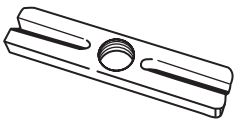
Needle Bearing Attachment P/N. 3AC-99710-0		Puller Claw P/N. 3AC-99736-0	Puller Plate P/N. 3AC-99737-0
Used with driver rod and center plate Installing propeller shaft housing needle bearing		Removing propeller shaft housing	
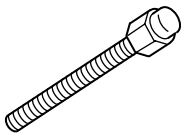	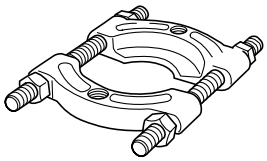	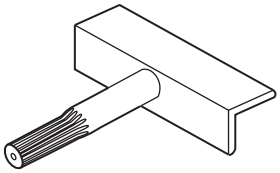	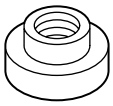
Center Bolt P/N. 3AC-99738-0	Universal Puller Plate P/N. 3AC-99750-0	Crankshaft Holder 2 P/N. 3AC-99815-0	Oil Seal Attachment P/N. 3AC-99820-0
Removing propeller shaft housing	Removing reverse gear/bearing	Holding crankshaft	Installing oil seal

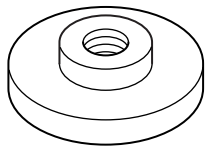	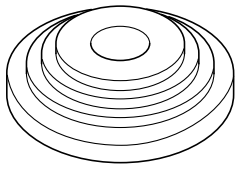	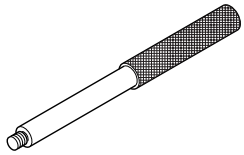
Bearing attachment P/N. 3AC-99905-0	Center Plate 2 P/N. 3AD-99701-0	Driver Rod 2 P/N. 3AD-99702-0
Used with driver rod Attaching reverse gear (C gear) bearing	Used with driver rod and needle bearing attachment Positioning pinion gear (B gear) needle bearing	Used with center plate and needle bearing attachment

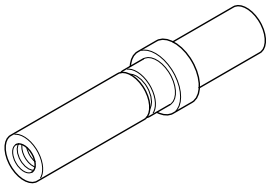	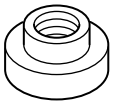	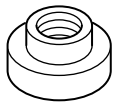
Needle Bearing Attachment 2 P/N. 3AD-99710-0	Oil Seal Attachment 2 P/N. 3AD-99820-0	Oil Seal Attachment 3 P/N. 3AG-99820-0
Used with driver rod and center plate Installing/removing pinion gear (B gear) needle bearing	Used with driver rod Installing oil seal in the propeller shaft housing	Installing pump case (lower) oil seal

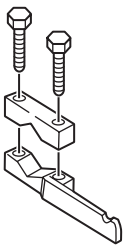	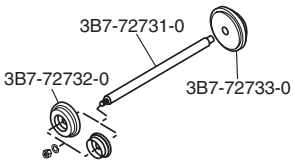	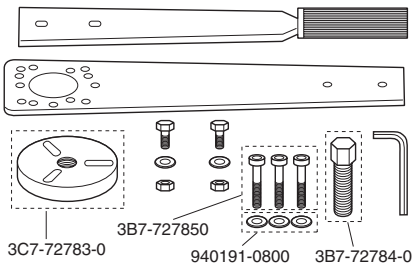
Backlash Measuring Tool Clamp P/N. 3B7-72720-0	Bearing Outer Press Kit P/N. 3B7-72739-0	Flywheel Puller Kit P/N. 3C7-72211-1
Measuring backlash	Installing forward gear (A gear) bearing outer race	Removing/installing flywheel

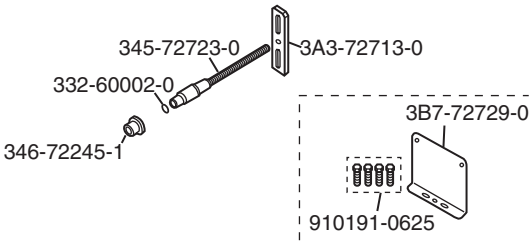	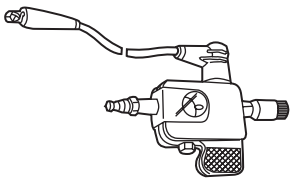	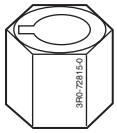
Backlash Measuring Tool Kit P/N. 3C8-72234-0	Spark Tester P/N. 3F3-72540-0	Crank Shaft Holder P/N. 3R0-72815-0
Measuring gap between forward and pinion gears (A and B gears)	Inspecting sparks	Holding crank shaft

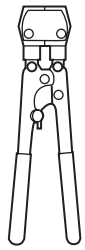	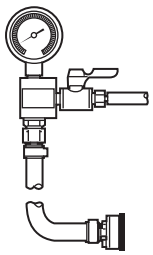
Clamp Plier P/N. 3T5-72864-0	Pressure Gauge Ass'y P/N. 3T5-72880-0
Caulking clamp	Measuring fuel pressure

4. Pre-delivery Inspection

1) Steering Handle

A Check installations for clattering and play.

B Adjust steering friction.

C Check throttle grip for movement. (full open/full close).

D Adjust throttle friction.

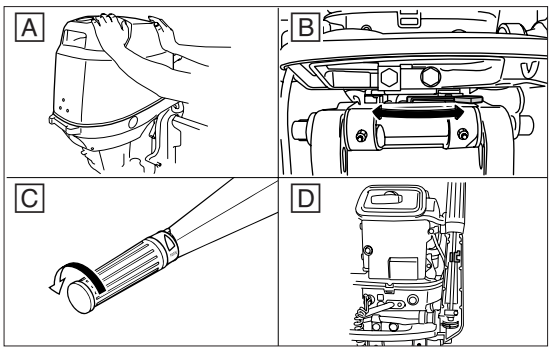

2) Gear Shift

Check that gear shifts from neutral (N) to forward (F) and reverse (R) smoothly.

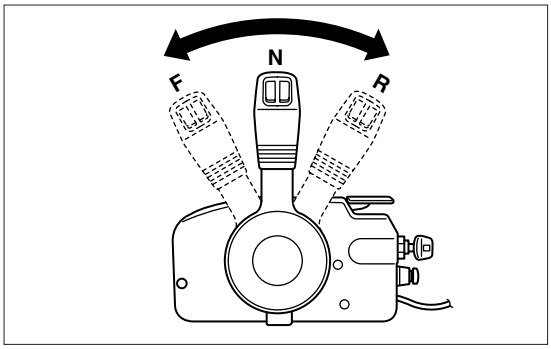

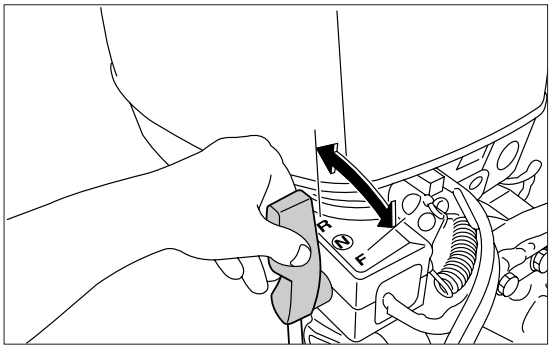

3) Engine Oil

Fill engine with engine oil.

4 Stroke Engine Oil :
1.6 L (1.7 US.qt)[without oil filter replacement]
1.8 L (1.9 US.qt)[oil filter replaced]

Use oil level gauge to check oil quantity.

⚠ CAUTION

Engine oil is removed before shipment to prevent leakage during transportation.

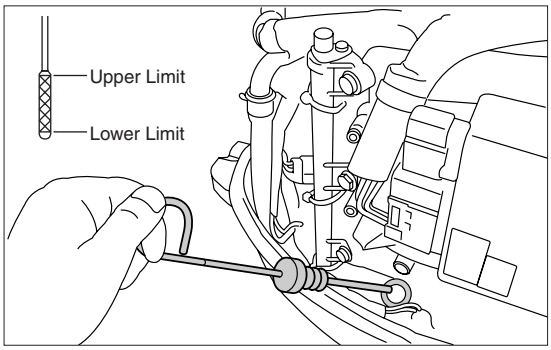

4) Gear Oil

Check quantity of gear oil.

Gear Oil :
350 cm^3 (11.8 fl.oz)

Spill of some oil from plug hole as plug is removed indicates that gear case is filled with specified quantity of gear oil.

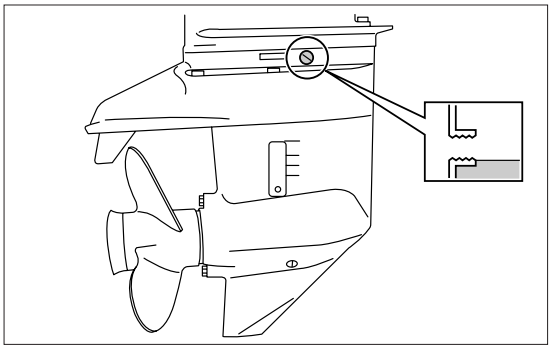

5) Fuel Line

Check that fuel tank contains sufficient amount of gasoline, fuel line is connected and is free of leak.

⚠ CAUTION

Since this is a four stroke engine model, do not use fuel mixed with engine oil. Use of fuel mixed with engine oil will cause engine trouble.

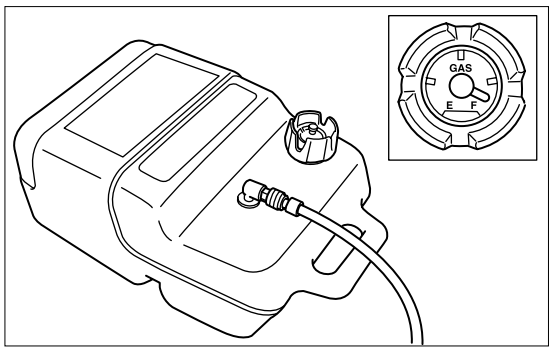

6) Rigging

Check that clamp bracket is fixed securely to hull. Check location of cavitation plate relative to boat bottom, and, if necessary, adjust to prevent decrease in propulsive force and engine overheating.

Test-run to determine the best installation height.

Standard installation height :
Cavitation plate located 5 to 25 mm (0.2 to 1.0in) below boat bottom

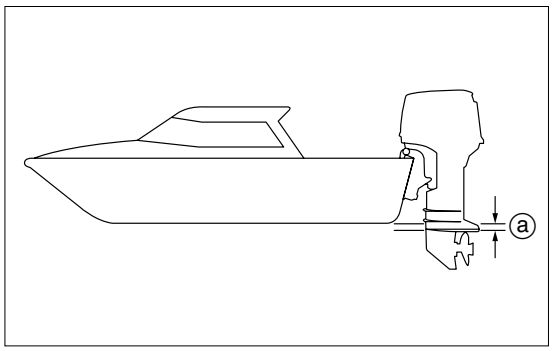

ⓐ5 to 25 mm (0.2 to 1.0 in)

7) Inspection of PTT unit

1. Operate PTT switch to check that outboard motor tilts up/down smoothly.
2. Operate PTT switch to check that tilting up/down outboard makes no abnormal noise.
3. Tilt up outboard motor and steer fully to the right and left to check that cables and hoses do not interfere with each other and with any part of hull.
4. Tilt down outboard motor to check that trim meter indicates the lowest position.

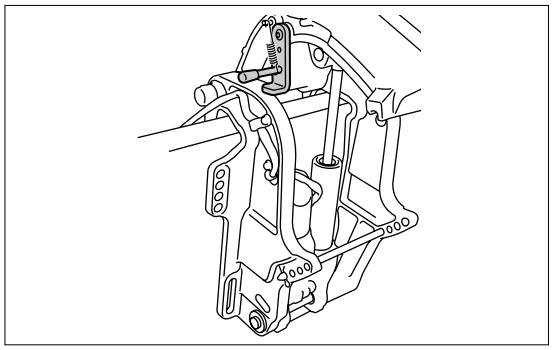

8) Inspection of gas shock absorber

1. Check that outboard motor tilts up/down smoothly.
2. Tilt up outboard motor and lock it with tilt lock lever ① to check that gas assisted holding mechanism functions normally.

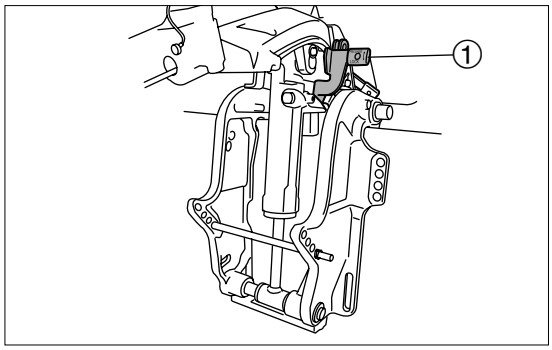

9) Inspection of starting switch and stop switch

1. Press start switch ① or turn main switch to START ② to check that engine starts.

2. Turn main switch to OFF ③ to check that engine stops.

   A Tiller Handle Model
   B Remote Control Model

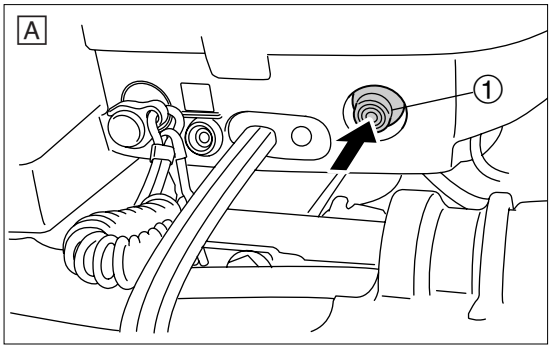

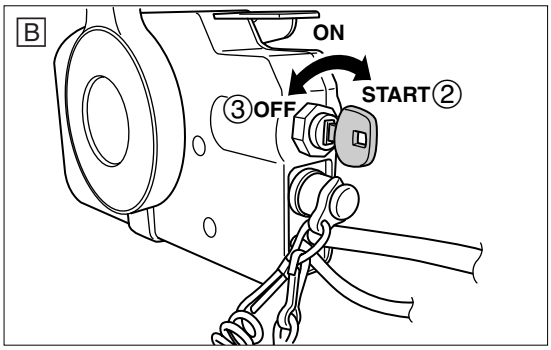

3. Press stop switch ④ hard or pull out lock ⑤ from stop switch ④ to check that engine stops.
   A Tiller Handle Model
   B Remote Control Model

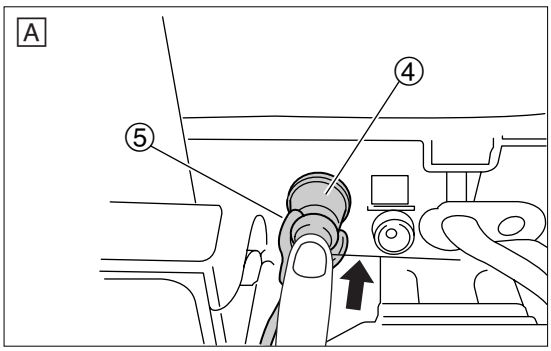

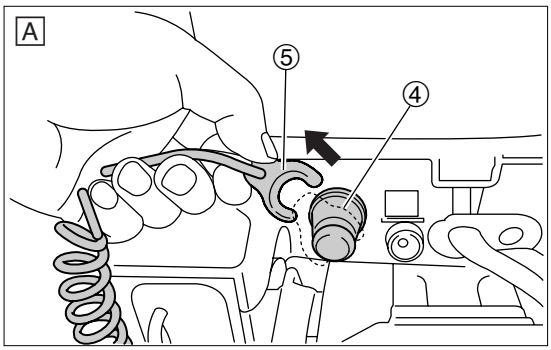

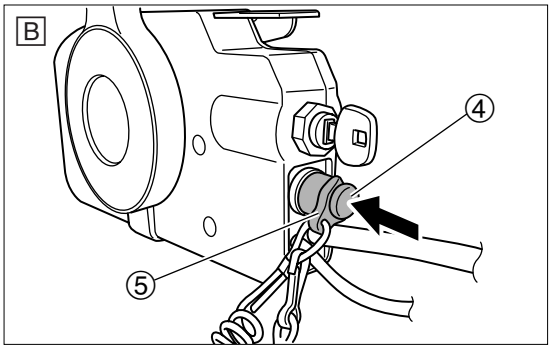

10) Cooling water check port

Check that cooling water check port ① discharges water during engine runs.

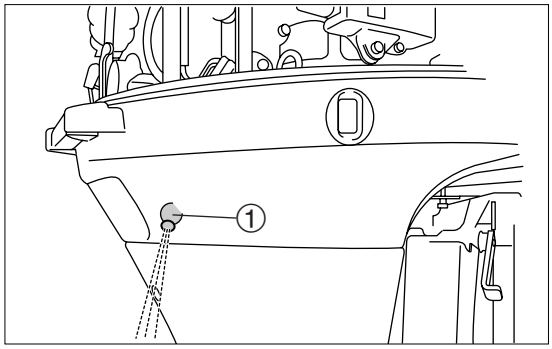

11) Idling

After engine has warmed up, use tachometer to check idle speed is as specified.

Idle Speed :
850±30 r/min

Tachometer :
P/N. 3AC-99010-0

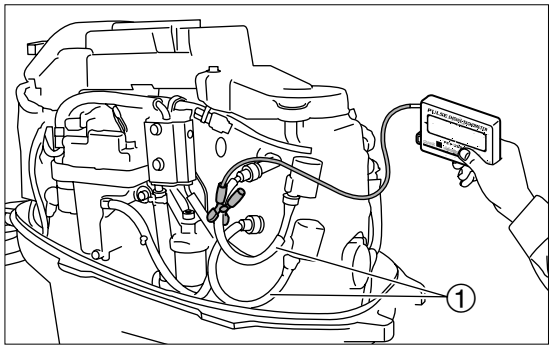

① High-tension cord

12) Propeller Selection

Select a propeller that is best-suited to type of boat and application.

Range of operating engine speed at WOT
25 hp model : 5,000 to 6,000 r/min
30 hp model : 5,250 to 6,250 r/min

⚠ CAUTION

Miss-selection of propeller can cause adverse effects on engine life, fuel consumption, etc. as well as on performance.

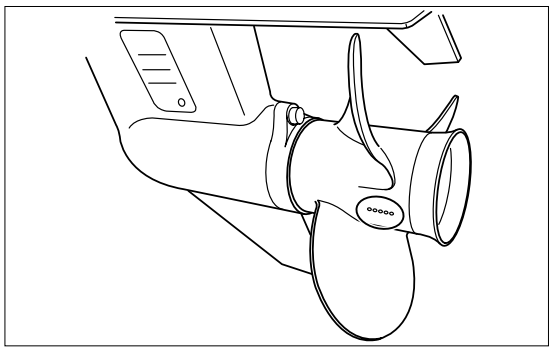

Propeller Marking (No. of Blades x Diameter [in/mm] x Pitch [in/mm])	14	(3 x 9⅞ x 14)	(3 x 252 x 360)
	DS13	(3 x 10⅛ x 13)	(3 x 257 x 330)
	DS12	(3 x 9⅞ x 12)	(3 x 252 x 305)
	DS11	(3 x 9⅞ x 11) in	(3 x 252 x 279) mm
	DS10	(3 x 9⅞ x 10)	(3 x 252 x 254)
	DS9	(3 x 9⅞ x 9)	(3 x 252 x 229)
	8	(3 x 10¼ x 8)	(3 x 260 x 210)

13) Trim Tab

Adjustment of trim tab angle

After installing outboard motor on the boat, use trim tab to achieve balance between port and starboard steering loads. Loosen trim tab bolt, adjust angle of trim tab _ as described below, and then tighten the bolt to specified torque.

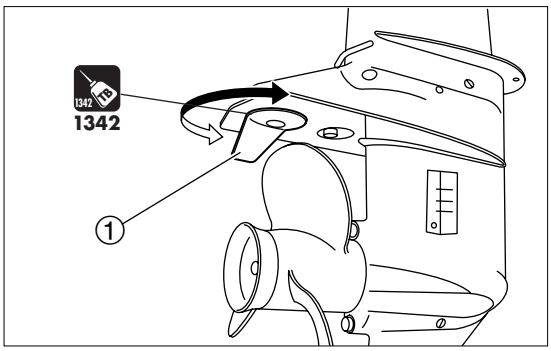

Trim tab bolt :
6 N·m (5 lb·ft) 0.6 kg

Example of trim tab angle adjustment

A If it is necessary to steer to port to make boat run straight or if boat steers itself to port when steering is held amidships, move trailing edge of trim tab to port side, or

B If it is necessary to steer to starboard to make boat run straight or if boat steers itself to starboard when steering is held amidships, move trailing edge of trim tab to starboard side.

Change trim tab angle a little for each test run and repeat the process several times until the best position is found.

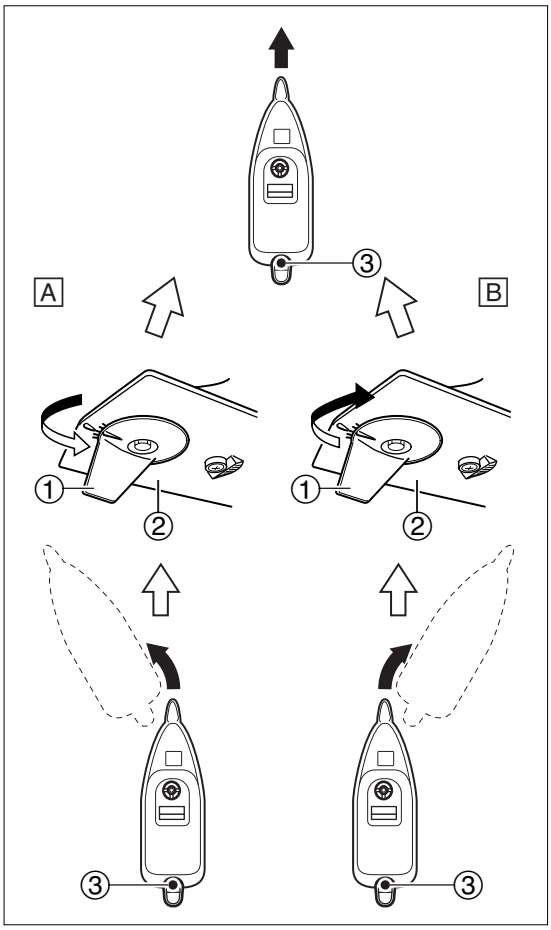

① Trim Tab
② Anti-cavitation Plate
③ Steering Pivot (Swivel Shaft)

5. Break-in Operation

Break-in operation is needed for the purpose of smoothening sliding surfaces between components such as pistons and cylinder, piston rings, piston pins, crank shaft, connecting rods, and intake and exhaust valves.

Break-in Operation…10 hours

Time	0	10 minutes	2 hours	3 hours	10 hours
Operation	Dead Slow or Idling	1/2 of WOT or less at approximately 3,000 r/min	3/4 of WOT or less at approximately 4,000 r/min	3/4 of WOT at approximately 4,000 r/min	Regular Operation
	Running at the slowest possible speed		WOT run for approximately 1 minute can be included every 10 minutes of run.	Short period WOT run can be included.	

6. Test Run

1. Start engine and check if gear shift can be made smoothly.

2. After completing warm-up operation, check idling revolution speed.

   Idling Revolution Speed :
   850±30 r/min

   Tachometer :
   P/N. 3AC-99010-0

3. Shift gear into forward (F) and run dead slow for approximately 10 minutes.

   Dead Slow Revolution Speed :
   850±30 r/min

4. Run at 2,000 r/min or half of WOT for initial 2 hours, then at 3,000 r/min or 3/4 of WOT for 1 hour.

5. Check that shifting into reverse (R) will not tilt up outboard motor and allow water to run into boat.

   Complete test run during break-in operation.

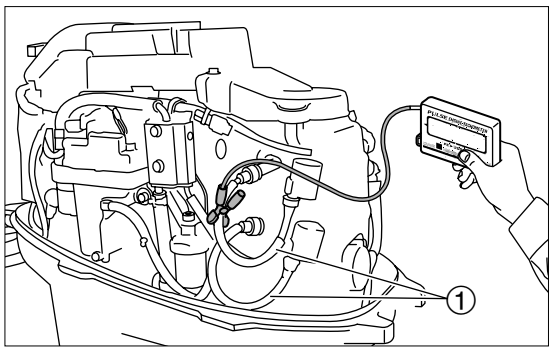

① High Tension Cord

7. Checks After Test Run

1. Check that no water is present in gear oil.

2. Check that no fuel leaks in the cowl.

3. Check that no oil and water leak in the cowl and no water is present in engine oil.

4. After test run, use flushing kit and fresh water to wash cooling water path by idling engine.

2

Service Data

1 Outline Dimensions ····· 2-2
1) Engine Dimensions ····· 2-2
2) Transom Bolts ····· 2-3
2 Fuel Injection System ····· 2-4
1) ECU Fuel Feed System ····· 2-4
3 Engine Lubrication System Diagram ··· 2-5
4 Cooling Water System Diagram ··· 2-6
5 Specifications ····· 2-7
6 Maintenance Data ····· 2-10
7 Tightening Torque Data ····· 2-18
8 Sealant Application Locations ····· 2-20

1.Outline Dimensions

1) Engine Dimensions

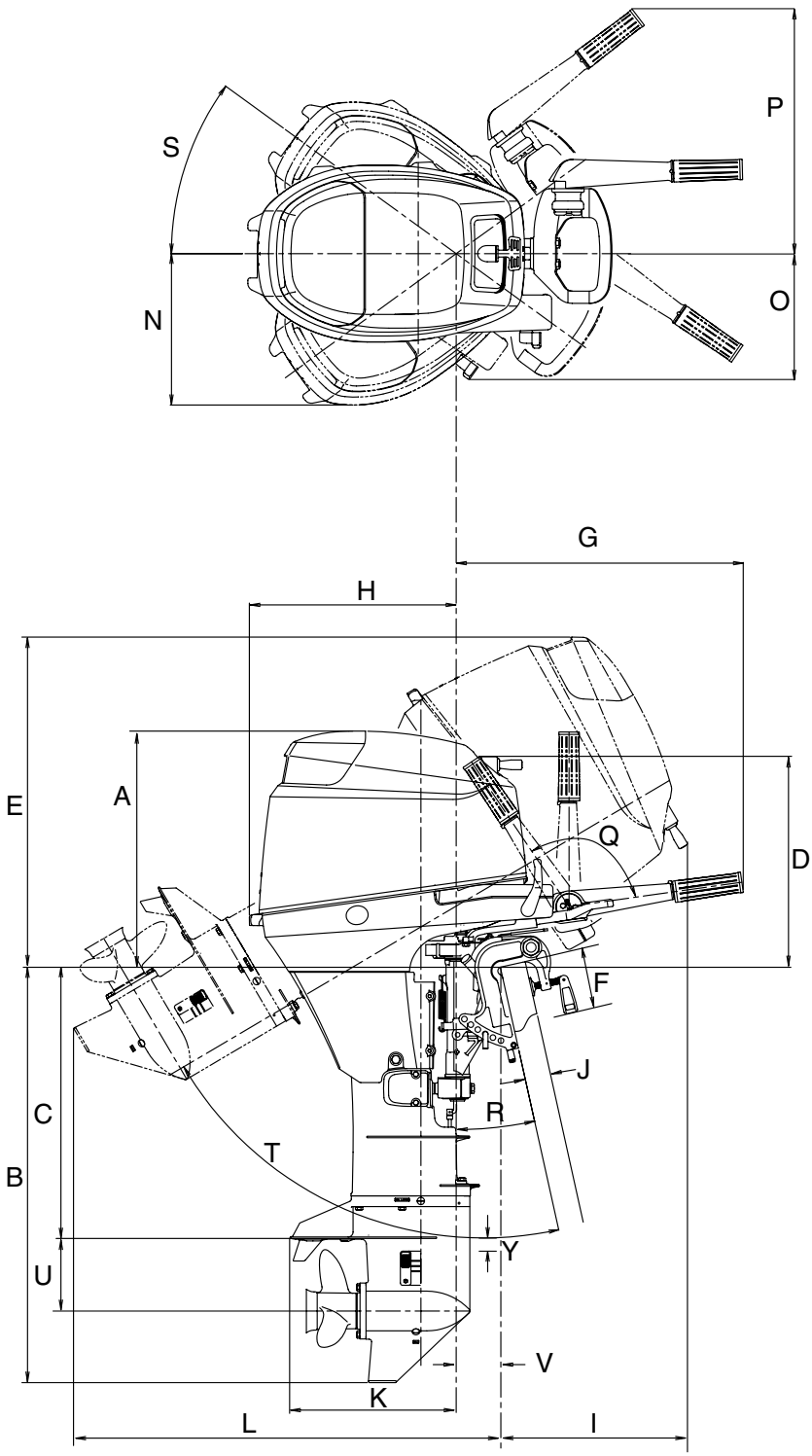

L-SIZE

Item	Type		Unit	25B/30B mm	25B/30B in
A			mm/in	487.5	19.193
B	S		mm/in	699.5	27.539
	L		mm/in	847	33.35
	UL		mm/in	974	38.35
C	S		mm/in	404.5	15.925
	L		mm/in	552	21.73
	UL		mm/in	679	26.73
D			mm/in	448	17.64
E			mm/in	673	26.50
F			mm/in	122	4.80
G			mm/in	606	23.86
H			mm/in	425	16.73
I	Mechanical		mm/in	384	15.12
	PTT · Gas		mm/in	366	14.41
J			mm/in	40-60	1.58~2.36
K			mm/in	342	13.46
L	Mechanical	S	mm/in	742	29.21
		L	mm/in	870	34.25
		UL	mm/in	980	38.58
	PTT · Gas	S	mm/in	755	29.72
		L	mm/in	898	35.35
		UL	mm/in	993	39.09
M	MF/EF		mm/in	391	15.39
	EP		mm/in	367	14.45
N			mm/in	309	12.17
O			mm/in	256	10.08
P			mm/in	519	20.43
Q			deg.	116	
R			deg.	12	
S	Mechanical		deg.	36	
	PTT · Gas		deg.	35	
T			deg.	*1 72,74,68	
U			mm/in	148	5.83
V	Mechanical		mm/in	86	3.39
	PTT · Gas		mm/in	110	4.33
Y			mm/in	26	1.02
Trim angle (Position)			deg.	*2 2.5-27.5(6) *3 8-20(4)	

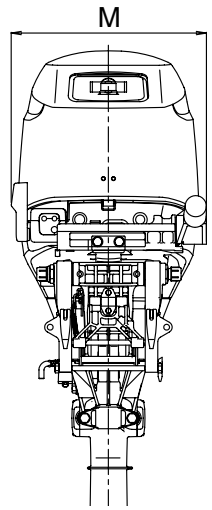

*1 MF/EF/EP=72°, EFT/EPT=74°, MFG/EFG/EPG=68°

*2 MF/EF/EP models

*3 EFT/EPT/MFG/EFG/EPG models

2) Transom Bolts

Mechanical Tilt Model

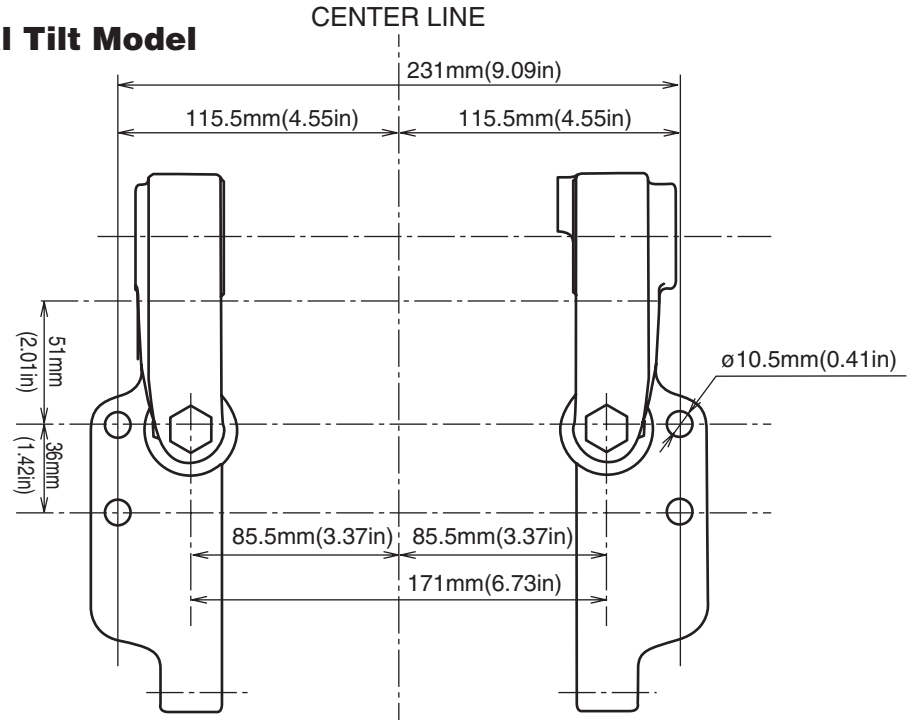

PTT or Gas Assisted Model

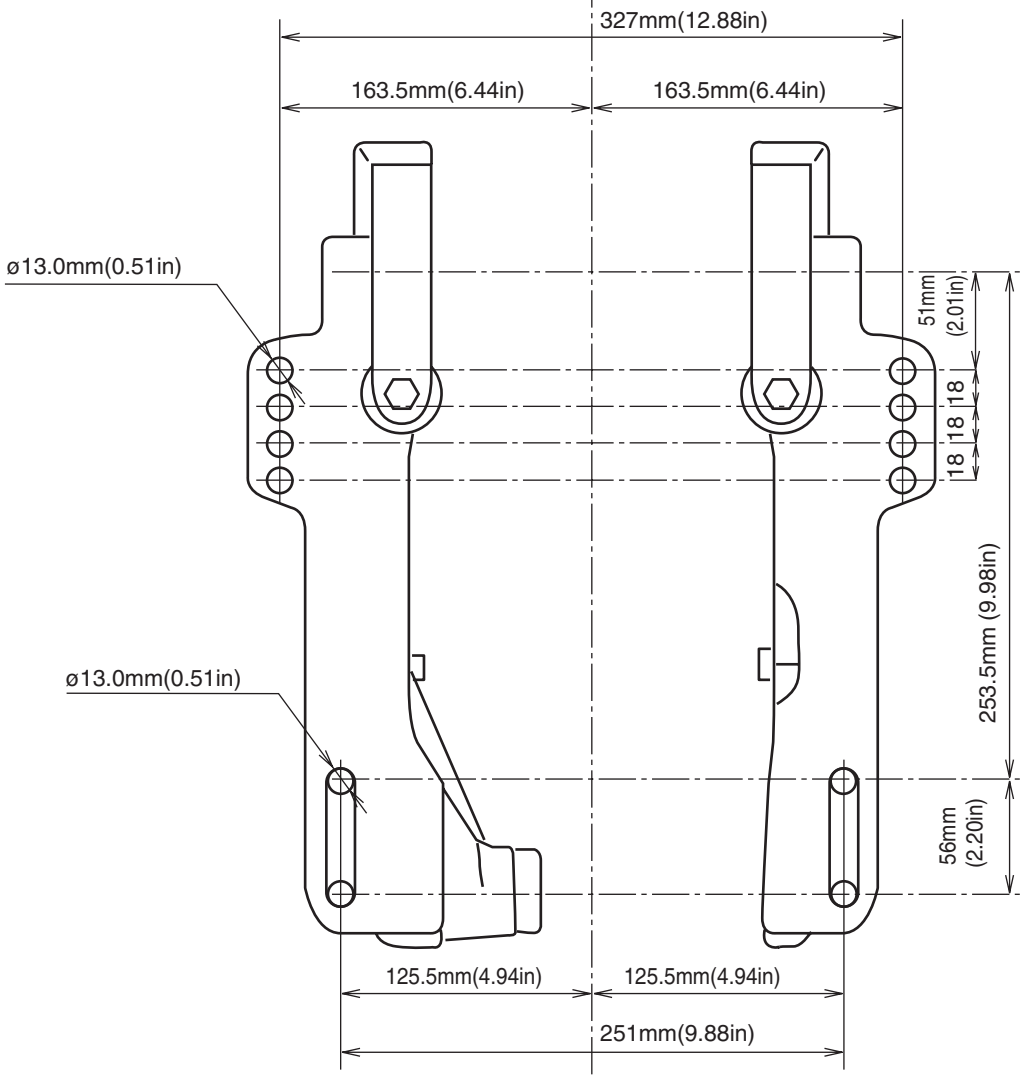

2.Fuel Injection System

1) ECU Fuel Feed System

ECU uses various sensors to precisely control injected fuel amount and ignition timing.

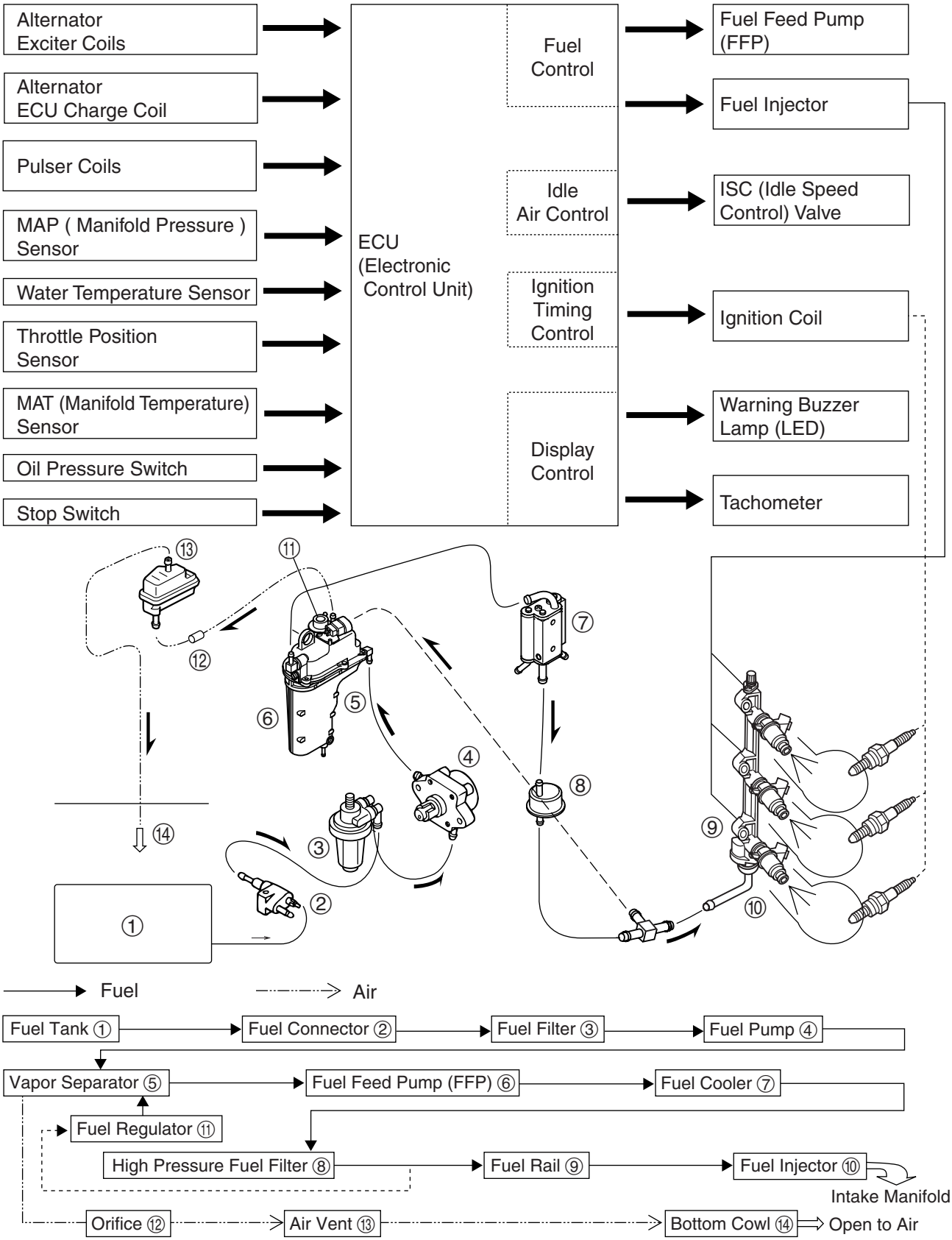

3.Engine Lubrication System Diagram

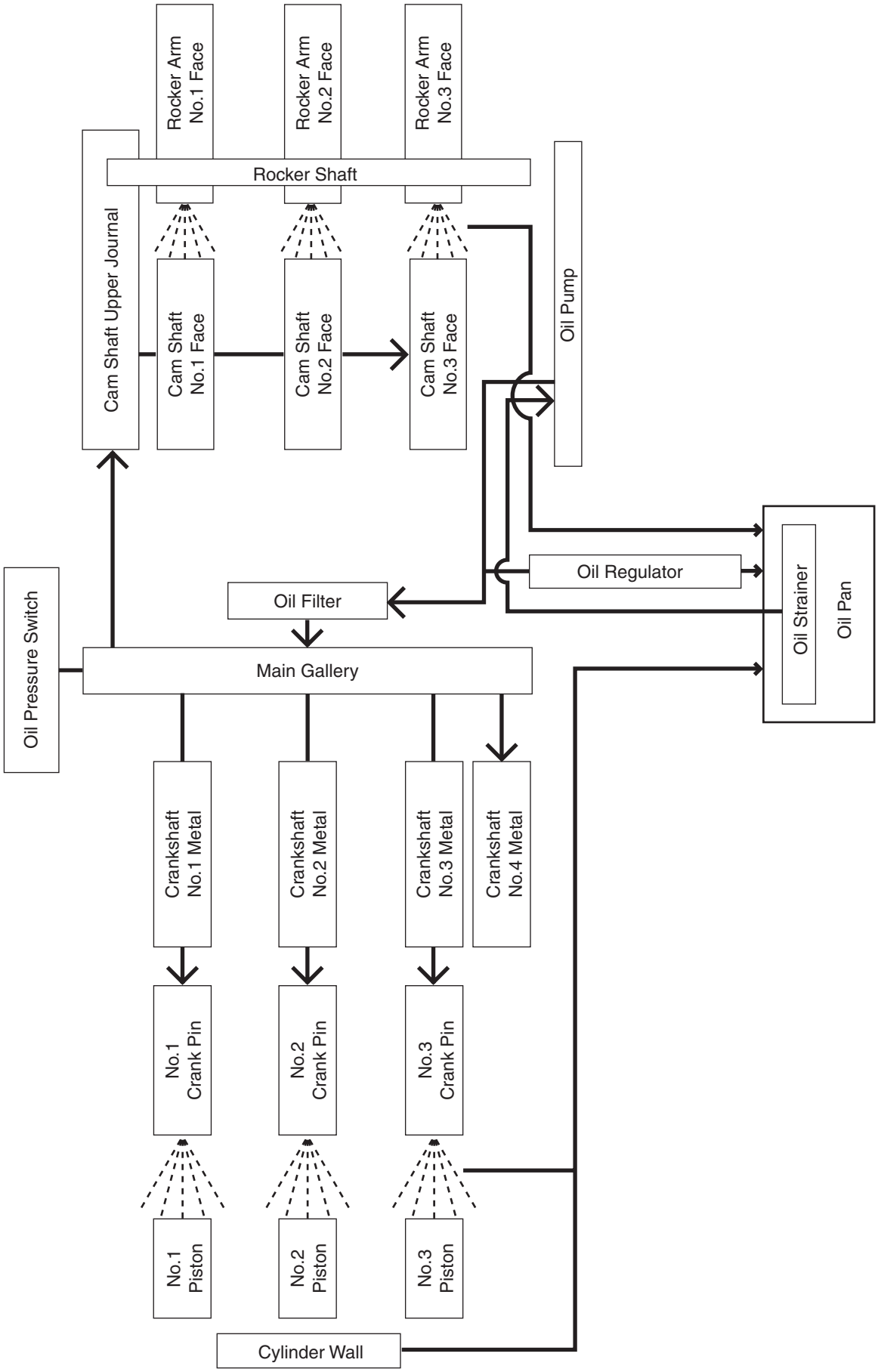

4.Cooling Water System Diagram

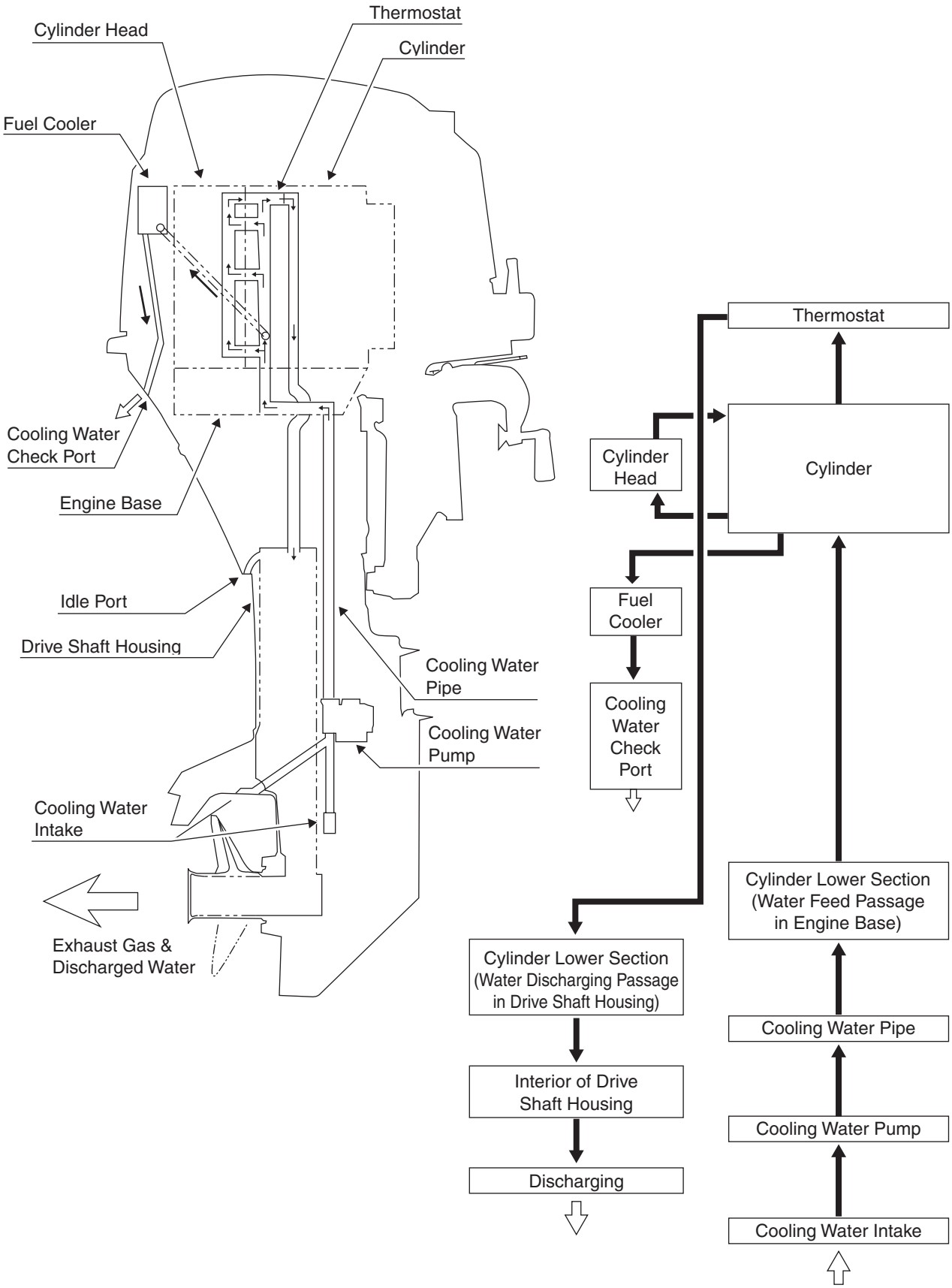

5.Specifications

Item		Unit	Outboard Model							
			MF	EF	EP	MFG	EFG	EPG	EFT	EPT

Dimensions (approx.)

Overall Length		mm (in)	1,031 (40.59)		652 (25.67)	1,031 (40.59)		652 (25.67)	1031 (40.59)	652 (25.67)
Overall Width		mm (in)	391 (15.39)		367 (14.45)	391 (15.39)		367 (14.45)	391 (15.39)	367 (14.45)
Overall Height	S	mm (in)	1,187 (46.73)							
	L	mm (in)	1,335 (52.56)							
	UL	mm (in)	1,462 (57.56)							
Transom Length	S	mm (in)	404 (15.91)							
	L	mm (in)	552 (21.73)							
	UL	mm (in)	679 (26.73)							

Weight (approx.)

	S	kg (lb)	71.5 (157.6)	74.5 (164.2)	73 (160.9)	78 (172.0)	81 (178.6)	79.5 (175.3)	82.5 (181.9)	81 (178.6)
	L	kg (lb)	73 (160.9)	76 (167.5)	74.5 (164.2)	79.5 (175.3)	82.5 (181.9)	81 (178.6)	84 (185.2)	82.5 (181.9)
	UL	kg (lb)	75 (165.3)	78 (172.0)	76.5 (168.7)	81.5 (179.7)	84.5 (186.3)	83 (183.0)	86 (189.6)	84.5 (186.3)

Performance

Maximum Output		kW (ps)	25 : 18.4 (25)	30 : 22.1 (30)
Full-throttle revolution speed range		r/min	25 : 5,000 to 6,000	30 : 5,250 to 6,250
Full-throttle Fuel Consumption		L/hr	25 : 8.8	30 : 10.4
Idling (Neutral [N])		r/min	850 ±30	
Trolling (Forward [F])		r/min	850 ±30	

Power Unit

Engine Type			4 Stroke Gasoline Engine							
No. of Cylinders			3							
Piston Displacement		cm^3 (cu in)	526 (32.09)							
Valve System			SOHC							
Bore x Stroke		mm (in)	61 x 60 (2.402 x 2.362)							
Compression Ratio			9.4							
Shift Operation System			Front Shift (Manual)		Remote Control	Front Shift (Manual)		Remote Control	Front Shift (Manual)	Remote Control
Starting System			Recoil Starting	Recoil/Electric Starting		Recoil Starting	Recoil/Electric Starting			
Lubrication System			Wet Sump							
Cooling System			Water Cooling (Impeller System)							
Exhaust System			Through-the-prop Exhaust							
Ignition System			CD Ignition							
Range of Ignition Augle			TDC 0° to BTDC 38° (ECU timing control)							
Spark Plugs			DCPR6E [NGK]							
Alternator Output			12V–15A							
Fuel Feed System			Electronic Fuel Injection							

Item	Unit	Outboard Model							
		MF	EF	EP	MFG	EFG	EPG	EFT	EPT

Fuel & Oil

Type of Fuel				Unleaded Gasoline (Research Octane Number 90 or over,Pump posted Octane Number 87 or over)
Fuel Tank Capacity			L	25
Fuel Priming System				ECU (Electronic Control Unit)
Fuel Pumping System				Mechanical (Plunger) pump + Electric System
Engine Oil	Type			4 Stroke Engine (Motor) Oil
Engine Oil	Grade		API	SE, SF, SG, SH, SJ, SL
Engine Oil	Grade		SAE	10W-30, 10W-40
Engine Oil	Grade		NMMA	FC-W Certified 10W-30
Engine Oil	Quantity		L	1.8 (when oil filter is replaced with new one)
Gear Oil	Type			Hypoid Gear Oil
Gear Oil	Grade	*1	API	GL-5
Gear Oil	Grade	*1	SAE	#90
Gear Oil	Quantity		cm^3 (fl.oz)	350 (11.8)

Lower Unit

Gear Shift Positions			F-N-R
Gear Ratio			1.92 (12 : 23)
Type of Gears			Spiral Bevel Gear
Clutch			Dog Clutch
Propeller Shaft Driving			Spline
Propeller Rotation Direction			Clockwise at forward (F) shift as viewed from rear
Propeller (Standard) *5	S	Marking	DS13 (13P)
Propeller (Standard) *5	L	Marking	DS11 (11P)
Propeller (Standard) *5	UL	Marking	DS10 (10P)

Bracket

No. of Trim Steps		Steps	6	4	
Trim Angle (Transom 12°)	*2	Degrees	–9.5° to +15.5°	–4° to +8°	
Shallow Water Drive Angle (Transom 12°)	*2	Degrees	+21.5	Adjustable	
Max. Tilt Angle	*3	Degrees	69.5	60	66
Steering Angle	*4	Degrees	36 + 36	35 + 35	
Max. Allowable Transom Thickness		mm (in)	40 to 60 (1.575 to 2.362)		

*1 Both API and SEA requirements shall be met.
*2 Angle relative to horizon when transom angle is 12 degrees.
*3 Tilting Range
*4 Full Steering Angle Range to Starboard and Port
*5 Standard Propeller may be different depending on the market.

Item	Unit	Outboard Model							
		MF	EF	EP	MFG	EFG	EPG	EFT	EPT

Warning System

Over-revolution Protection			Controls engine speed to approximately 6,300 r/min or less. Warning buzzer sounds, and warning lamp is lit.
Engine Hydraulic Pressure Low	*1		Controls engine speed to approximately 2,800 r/min or less (Low Speed ESG). Warning buzzer sounds, and warning lamp is lit.
Engine Cooling Water Temperature Abnormally High.			Controls engine speed to approximately 2,800 r/min or less (Low Speed ESG). Warning buzzer sounds, and warning lamp is lit.
Water Temperature MAP Sensor Malfunction	*1		Controls engine speed to approximately 2,800 r/min or less (Low Speed ESG). Warning buzzer sounds, and warning lamp blinks
Warning System Operation Check			Warning buzzers sounds for 2 seconds and lamp is lit for 5 seconds.

Optional Parts

Propeller [Marking] (No. of Blades x Diameter x Pitch) [in/mm]		Marking	14	(3 x 9 7/8 x 14)	(3 x 252 x 360)
			DS13	(3 x 10 1/8 x 13)	(3 x 257 x 330)
			DS12	(3 x 9 7/8 x 12)	(3 x 252 x 305)
			DS11	(3 x 9 7/8 x 11) in	(3 x 252 x 279) mm
			DS10	(3 x 9 7/8 x 10)	(3 x 252 x 254)
			DS9	(3 x 9 7/8 x 9)	(3 x 252 x 229)
			8	(3 x 10 1/4 x 8)	(3 x 260 x 210)
Tachometer		No. of Poles	12		
Remote Control Cable		Feet	Cable Length : 7 - 30 feet		

*1 Stop engine to cancel warning system operation.

6.Maintenance Data

	Part Name	Item	Standard Value
Engine Parts	**Cylinder Head**	Build up of carbon in combustion chamber	
		Distortion or damage on mating surface	
		Corrosion on the mating surface	
		Cooling water passage clogged	
	Cylinder	Deposition in water jacket	
		Wear of bore : Use cylinder gauge to measure inner diameter.	61.00mm (2.4016in)
		Seizure, cylinder liner damage, or wear Taper Out-of-roundness	
		Distortion or damage on cylinder head mating surface	
		Engine Anode	
	Piston	Outer Diameter Measure outer diameter at 9mm (0.35in) above lower end of piston skirt (at right angle to piston pin).	60.96mm (2.4000in)
		• Piston Clearance	0.020 to 0.055mm (0.00079 to 0.00217in)
		Carbon build up on piston crown and in ring grooves	
		Scratch on the sliding surface	
		Measure side clearance between piston ring and ring groove.	Top Ring : 0.04 to 0.08mm (0.0016 to 0.0031in)
			Second Ring : 0.03 to 0.07mm (0.0012 to 0.0028in)
			Oil Ring : 0.05 to 0.15mm (0.0020 to 0.0059in)
		Measure piston pin hole diameter. Clearance between piston pin and pin hole	0.002 to 0.012mm (0.00008 to 0.00047in)
	Piston Pin	Outer Diameter	16.00mm (0.6299in)
	Piston Rings	Ring End Gap Note : Measurement of ring end gap : If ring gauge is not available, use cylinder bore top or bottom with small wear.	Ring Gauge 61.000mm (2.40157in)
		Top Ring	Top Ring : 0.15 to 0.30mm (0.0059 to 0.0118in)
		Second Ring	Second Ring : 0.35 to 0.50mm (0.0138 to 0.0197in)
		Oil Ring	Oil Ring : 0.20 to 0.70mm (0.0079 to 0.0276in)
	Connecting Rod	Small End Inner Diameter	16.01mm (0.6303in)
		Big End Oil Clearance	0.010 to 0.036mm (0.00039 to 0.00142in)
		Big End Side Clearance	0.10 to 0.25mm (0.0039 to 0.0098in)
	Crankshaft	Crankshaft runout : Use V blocks to support crankshaft at journals of both ends.	Less than 0.05mm (0.0020in) at both ends and at the center.
		Crank pin outer diameter	29.98mm (1.1803in)
		Main journal outer diameter	35.99mm (1.4169in)
		Metal bearing oil clearance	0.012 to 0.044mm (0.00047 to 0.00173in)
		Crankshaft side clearance	0.05 to 0.15mm (0.0020 to 0.0059in)

Functional Limit	Action To Be Taken
	Clean to remove.
0.1mm (0.004in)	Correct. (Use water proof sand paper of #240 to 400 on the surface plate to level. Use #600 to finish.)
	Correct if possible, or replace.
	Clean to remove.
	Clean to remove.
61.06mm (2.4039in)	Replace if over specified limit.
0.08mm (0.0032in) 0.06mm (0.0024in)	Replace if severely damaged on the piston sliding surface, which cannot be repaired with sand paper of No. 400 to 600, or damaged over specified limit.
0.1mm (0.004in)	Correct. (Use water proof sand paper of #240 to 400 on the surface plate to level. Use #600 to finish.)
	Replace if severely consumed.
60.90mm (2.3976in)	Replace if less than specified limit.
0.150mm (0.00591in)	Replace if over specified limit.
	Clean to remove.
	Correct if possible (with #400 to 600 water proof sand paper), or replace.
Top Ring : 0.10mm (0.0039in)	Replace if over specified limit.
Second Ring : 0.09mm (0.0035in)	Replace oil ring when top ring or second ring is replaced.
Oil Ring : 0.17mm (0.0067in)	
0.040mm (0.00157in)	Replace if over specified limit.
15.97mm (0.6287in)	Replace if less than specified limit.
Top Ring : 0.50mm (0.0197in)	Replace if the gap is over specified limit only if cylinder iner wear is less than specified limit. Replace oil ring when top ring or second ring is replaced.
Second Ring : 0.70mm (0.0276in)	
16.04mm (0.6315in)	Replace if over specified limit.
0.060mm (0.00236in)	Replace if over specified limit.
0.60mm (0.0236in)	Replace if over specified limit.
0.05mm (0.0020in)	Replace if over specified limit.
29.95mm (1.1791in)	Replace if less than specified limit.
35.97mm (1.4161in)	Replace if less than specified limit.
0.06mm (0.0024in)	Replace if over specified limit.
0.50mm (0.0197in)	Replace if over specified limit.

	Part Name	Item		Standard Value	
Engine Parts	**Intake Valve**	Valve Clearance	IN	0.15±0.02mm (0.006±0.001in)	
	Exhaust Valve		EX	0.20±0.02mm (0.008±0.001in)	
		Valve Stem Outer Diameter	IN	5.48mm (0.2157in)	
			EX	5.46mm (0.2150in)	
		Valve Guide Inner Diameter	IN	5.51mm (0.2169in)	
			EX	5.51mm (0.2169in)	
		Clearance between valve	IN	0.008 to 0.040mm (0.00031 to 0.00157in)	
		guide and valve stem	EX	0.025 to 0.057mm (0.00098 to 0.00224in)	
		Width of contact with	IN	1.0mm (0.04in)	
		valve seat	EX	1.0mm (0.04in)	
	Valve Spring	Free Length		35.0mm (1.38in)	
	Cam Shaft	Cam Height (Both IN and EX)	25	23.87mm (0.9398in)	
			30	24.28mm (0,9559in)	
		Journal Outer Diameter		Pulley Side	17.98mm (0.7079in)
				Oil Pump Side	15.97mm (0.6287in)
		Clearance between cam shaft and holder (journal area)		0.02 to 0.05mm (0.0008 to 0.0020in)	
	Rocker Arm &	Rocker Arm Inner Diameter		13.01mm (0.5122in)	
	Shaft	Shaft Outer Diameter		12.99mm (0.5114in)	
		Shaft Clearance		0.006 to 0.035mm (0.00024 to 0.00138in)	
	Timing Belt	External Appearance			
	Engine Block	Compression Pressure (Reference) at 600 to 700r/min		1.13MPa (164PSI) [11.5kgf/cm^2] ±10%	
Fuel and Lubrication Parts	**Throttle Body**			25	30
		Identification Mark		TAB	TAA
		Throttle Bore Diameter		20mm (0.79in)	40mm (1.58in)
	Fuel Regulator	Fuel Pressure		Atmospheric Pressure +0.29MPa (43psi) [3.0kg/cm^2] ±10%	
	Vapor Separator	Seal Ring Wear and Damage			
		Float Height		Float Height : 20.0 to 23.0mm (0.787 to 0.906in)	
		Float Valve		Float Drop (Reference) 30.0mm (1.181in)	
	Oil Pump	Pump Body Inner Diameter		–	
		Clearance between Outer Rotor and Body		–	
		Height of Outer Rotor		–	
		Clearance between sides of rotor and body		–	
		Clearance between outer and inner rotors		–	

Functional Limit	Action To Be Taken
	Adjust into specifid range.
5.46mm (0.2150in) 5.44mm (0.2142in)	Replace if less than specified limit.
5.55mm (0.2185in) 5.57mm (0.2193in)	Replace if over specified limit.
0.070mm (0.00276in) 0.100mm (0.00394in)	Replace if over specified limit.
2.0mm (0.08in) 2.0mm (0.08in)	Replace if over specified limit.
33.5mm (1.32in)	Replace if less than specified limit.
25 : 23.60mm (0.9291in) 30 : 24.00mm (0.9449in)	Replace if less than specified limit.
Pulley Side : 17.95mm (0.7067in) Oil Pump Side : 15.95mm (0.6280in)	Replace if less than specified limit.
0.09mm (0.0035in)	Replace if over specified limit.
13.05mm (0.5138in)	Replace if over specified limit.
12.94mm (0.5094in)	Replace if less than specified limit.
0.060mm (0.00236in)	Replace if over specified limit.
Wear, Damage, Elongation	Replace if necessary.
	Check if rotating parts, sliding parts and sealing parts cause compression leakage.
	Replace if out of specified range.
Wear, Damage, Deterioration Due To Gasoline	Replace if necessary.
	Replace if out of specified range
Wear, Deterioration, Damage	Replace if necessary.
40.8mm (1.606in)	Replace if over specified limit.
0.25mm (0.0098in)	Replace if over specified limit.
14.96mm (0.5890in)	Replace if less than specified limit.
0.11mm (0.0043in) (Including oil pump cover wear)	Replace if over specified limit.
0.16mm (0.0063in)	Replace if over specified limit.

	Part Name	Item		Standard Value
Electrical Parts	**Magneto**	Ignition Timing	(at 850 r/min)	BTDC 5°±5°
		Spark Performance (Use genuine spark tester.)	(at 500 r/min)	10mm (0.4in) or over
		Alternator Output	(at 5,000 r/min)	12V-180W
		Alternator Resistance		
		Exciter Coil	Between White/Red and White/Black	11 to 16Ω
			Between White/Blue and White/Black	11 to 16Ω
		Charge Coil	Between Yellow and Yellow	0.29 to 0.43Ω
		ECU Charge Coil	Between White and White	1.1 to 1.7Ω
		Pulser Coil (#1)	Between Red/White and Black	148 to 222Ω
		(#2)	Between Red/Yellow and Black	148 to 222Ω
	Ignition Coil	Primary Coil Resistance	Between Black/White and Black	0.17 to 0.23Ω
		Secondary Coil Resistance	(Between High Tension Cable and Black)	3.3 to 4.9kΩ
		[KΩRange]	Between Plug Cap and Black	7.1 to 11.1kΩ
	Plug Cap	Resistance Between Terminals [kΩRange]		3.0 to 7.0kΩ
	Spark Plugs	Plug Type		DCPR6E [NGK]
		Spark Gap		0.8 to 0.9mm (0.032 to 0.035in)
	Fuel Injector	Resistance Between Terminals		11.1 to 12.3Ω
	Throttle Position Sensor	Resistance Between Terminals[kΩRange]	Between Blue and Black	4.0 to 6.0kΩ
			Between Yellow and Black	Fully Closed : 0.4 to 1.0kΩ, Fully Open : 3.2 to 3.8kΩ
			Between Yellow and Blue	Fully Closed : 3.8 to 4.6kΩ, Fully Open : 1.2 to 1.6kΩ
	ISC Valve	Resistance Between Terminals		24-30Ω
	MAT (Manifold Temperature) Sensor	Resistance Between Terminals [kΩRange]	(at 20°C)	2.35 to 2.55kΩ
			(at 80°C)	0.30 to 0.35kΩ
	Water Temperature Sensor	Resistance Between Terminals [kΩRange]	(at 20°C)	2.4 to 2.9kΩ
			(at 80°C)	0.29 to 0.32kΩ
	Rectifier	Resistance Between Terminals		"Refer to Chapter 8."
	Starter Motor	Battery		12V 70AH (350CCA or 465MCA) to 12V 100AH (775CCA or 1000MCA at below freezing temperature)
		Output		12V 0.6kW
		Clutch		Overrunning Clutch
		Brush Length		12.5mm (0.492in)
		Commutator Undercut		0.5 to 0.8mm (0.020 to 0.031in)
		Commutator Outer Diameter		30.0mm (1.181in)
	Fuse	Capacity		20A

Functional Limit	Action To Be Taken
10mm (0.4in)	Replace if less than specified value.
	Replace if out of specified range.
	Replace if out of specified range.
	Replace if out of specified range.
	Replace if out of specified range.
	Clean to remove carbon build up and dirt. Adjust with side electrode.
1.2mm (0.047in)	Replace if electrodes are severely worn.
	Replace if out of specified range.
	Replace throttle body ass'y if out of specified range.
	Replace if out of specified range.
	Replace if out of specified range.
	Replace if out of specified range.
	Replace if out of specified range.
9.5mm (0.374in)	Replace if less than specified limit.
0.2mm (0.008in)	Replace if less than specified limit.
29.0mm (1.142in)	Replace if less than specified limit.
20A	

	Part Name	Item		Standard Value
Cooling System Parts	**Thermostat**	Valve Operation Starting Temperature (Submerged)		60°C±1.5°C (140±3°F)
		Valve Full Open Temperature (Submerged)		75°C (167°F)
		Valve Full Open Lift (Submerged)		3.0mm (0.12in) or over
	Pump Impeller	Wear, Crack		
	Pump Case (Liner)	Wear		
	Guide Plate	Wear		
Lower Unit Parts	**Anode**	Gear Case Anode Consumption		
	Clutch Spring	Free Length		77.5mm (3.050in)
	Propeller Shaft	Bearing Wear and Damage		
		Oil Seal Wear		
		Propeller Shaft Runout		
	Bevel Gears	Pinion Gear (B Gear) Height		0.60 to 0.64mm (0.0236 to 0.0252in)
		Backrush between forward gear and pinion (A and B gears) "Refer to Chapter 6."		0.08 to 0.13mm (0.0031 to 0.0051in) or, Gauge Indication 0.33 to 0.54mm (0.0130 to 0.0213in)
		Reverse Gear (C Gear) Washer Thickness		1.5mm (0.0591in)
	Propeller	Wear, Bend, Crack, Break		
	Drive Shaft	Spline (Upper) Base Tangent Length, 3 Gears		7.9mm (0.311in)
		Bearing Damage		
		Oil Seal Wear and Damage		
		Drive Shaft Runout		
	Reverse Lock Spring	Free Length S Model		95.0mm (3.74in)
		L & UL Models		98.0mm (3.86in)
PTT Parts	**Oil Pump**	Type		Gear Pump
		Oil Capacity		263cm³ (8.9 fl.oz.)
		Recommended Oil		ATF (DEXRON Ⅲ)
	PTT Motor	Voltage		DC 12V
		Continuous Run		60 seconds or less
		Output		130W
		Direction of Revolution		Forward, Revese
		Circuit Breaker	Type	Bimetal
			ON/Reset Time	20sec or more (25 Amp)/30sec or less [25°C(77°F)]
		Brush Length		10.0mm (0.39in)
		Commutator	Outer Diameter	19.5mm (0.768in)
			Depth of Undercut	1.3mm (0.051in)
	Tilt Cylinder	Piston Diameter		32.0mm (1.260in)
		Tilt Rod Diameter		12.5mm (0.492in)
		Stroke		140.0mm (5.51in)
	PTT Switch			Paddle Rocker Switch (3A)
				Toggle Switch (20A)
Other Parts	**Oil Seals**	Damage, Wear		

Functional Limit	Action To Be Taken
Any opening under ambient temperature	Replace if out of specified range.
75°C (167°F) because thermostat operation is delayed. Measure valve open lift after 5 minutes.	
3.0mm (0.12in)	Replace if less than specified limit.
Wear, crack or damage on tips and upper and lower surface lips	Replace pump case liner and guide plate as a set.
	Replace if severely worn.
	Replace if severely worn.
	Replace if severely worn.
75.0mm (2.955in)	Replace if less than specified limit.
	Replace if necessary.
0.4mm (0.015in)	Replace if over specified limit.
0.05mm (0.0020in)	Replace if over specified limit.
0.60 to 0.64mm (0.0236 to 0.0252in)	Adjust, or replace.
0.05 to 0.16mm (0.0020 to 0.0063in) or Gauge Indication 0.21 to 0.67mm (0.0083 to 0.0264in)	Adjust, or replace.
1.35mm (0.0531in)	Replace if less than specified limit.
Severe Damage	Replace if out of specified range.
7.5mm (0.295in)	Replace if less than specified limit.
	Replace if necessary.
0.4mm (0.015in)	Replace if necessary.
0.5mm (0.020in)	Replace if over specified limit.
97.0mm (3.82in)	Replace if over specified limit.
100.0mm (3.94in)	Replace if over specified limit.
60 seconds	
6.0mm (0.236in)	Replace PTT motor ass'y if less than specified limit.
18.5mm (0.728in)	Replace PTT motor ass'y if less than specified limit.
0.8mm (0.031in)	Replace PTT motor ass'y if less than specified limit.
Lip deteriorated, degraded or damaged, or tightening margin reduced to 0.5mm (0.020in) due to wear	Replace if out of specified range.

7.Tightening Torque Data

	Fastened Components	Wrench A	Screw B x Pitch	Type of Fastener	Tightening Torque		
		mm	mm		N·m	lb·ft	kg·m
Engine	Cylinder Block - Cylinder Head	12	M8 x 1.25	Bolt	First Tightening Torque :		
					10	7	1.0
					Final Tightening Torque :		
					30	22	3.0
		10	M6 x 1.0	Bolt	First Tightening Torque :		
					6	4	0.6
					Final Tightening Torque :		
					10	7	1.0
	Cylinder Block - Crank Case	12	M8 x 1.25	Bolt	First Tightening Torque :		
					10	7	1.0
					Final Tightening Torque :		
					23.5	17	2.4
		10	M6 x 1.0	Bolt	First Tightening Torque :		
					6	4	0.6
					Final Tightening Torque :		
					11.5	8.5	1.2
	Connecting Rod	10	M7 x 1.0	Bolt	First Tightening Torque :		
					6	4	0.6
					Final Tightening Torque :		
					12	9	1.2
	Tappet Lock Nut	10	M6 x 0.75	Nut	7	5	0.7
	Flywheel	27	M18 x 1.5	Nut	150	108	15.0
	Timing Pulley	40	M32 x 1.0	Nut	64	46	6.4
	Cam Shaft Pulley	10	M6 x 1.0	Bolt	11	8	1.1
	Belt Tensioner	17	M10 x 1.25	Bolt	27	20	2.7
	Hanger	13	M8 x 1.25	Bolt	23	17	2.3
	Plunger	19	M16 x 1.5	–	30	22	3.0
	Oil Filter	–	M20 x 1.5	–	18	13	1.8
	Oil Pressure Switch	24	PT1/8	–	8	6	0.8
	Oil Pump	10	M6 x 1.0	Bolt	9	7	0.9
	Water Temperature Sensor	19	–	–	22	16	2.2
	Cylinder Head Cover	10	M6 x 1.0	Bolt	First Tightening Torque :		
					6	4	0.6
					Final Tightening Torque :		
					9	7	0.9
	Intake Manifold	10	M6 x 1.0	Bolts and Nuts	9	7	0.9
	Spark Plugs	16	M12 x 1.25	–	18	13	1.8
	Power Unit Installation	13	M8 x 1.25	Bolt	30	22	3.0
Swivel and Stern Bracket	Swivel Bracket Shaft	32	0.875in	Nylon Nut	24	17	2.4
	Co-pilot Handle	13	M8 x 1.25	Nylon Nut	6	4	0.6
	Drag Link	–	0.375in	Bolt	28	20	2.8
	Steering Bracket Hook Plate	17	M10 x 1.25	Bolt	41	30	4.1

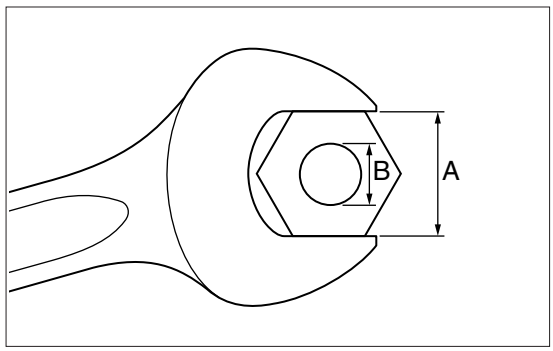

	Fastened Components	Wrench A	Screw Size B	Type of Fastener	Tightening Torque		
		mm	mm		N·m	lb·ft	kg·m
PTT	Tilt Cylinder End	36	–	–	155	112	15.5
	Tilt Rod Joint	17	–	Nut	35	18	3.5
	Reservoir Tank	–	–	Bolt	5	4	0.5
	Reserve Cap	–	–	–	1.5	1.1	0.15
	Motor Flange	–	–	Screw	2.5	1.8	0.25
	Manual Valve	–	–	–	2	1.5	0.2
	Oil Pump	–	–	Bolt	5.5	4.0	0.55
	PTT Switch (Remote Controller)	–	–	–	0.8	0.6	0.08
	PTT Switch (Bottom Cowl)	10	M6 x 1.0	Bolt	6	4	0.6
Drive Shaft Housing	(Upper) Mount Rubber	17	M10 x 1.5	Nylon Nut	21	15	2.1
	(Lower) Mount Rubber	19	M12 x 1.25	Bolts and Nuts	40	29	4.0
	1/4 Taper Plug	–	PT1/4	–	8	6	0.8
	Engine Base	13	M8 x 1.25	Bolt	31	22	3.1
	Drain Bolt (Engine Oil)	16	M14 x 1.5	Bolt	24	17	2.4
Lower Unit	Lower Unit Installation Bolt :	13	M8 x 1.25	Bolts and Nuts	19	14	1.9
	Pinion Gear (B Gear)	17	M10 x 1.5	Nut	35	25	3.5
	Propeller Shaft	19	M12 x 1.5	Nut	25	18	2.5
Bottom Cowl	Start Switch	–	M16 x 1.5	Nut	3.5	2.5	0.35
	Stop Watch	–	M16 x 1.5	Nut	2.3	1.7	0.23
	Neutral Switch	–	M12 x 1.5	Nut	3.3	2.4	0.33
Tiller Handle	Throttle Shaft Co-pilot	–	M6 x 1.0	Adjusting Screw	Adjust.		

Standard Tightening Torque	M5 Bolts and Nuts	8	M5 x 0.8	Bolts and Nuts	4	3	0.4
	M6 Bolts and Nuts	10	M6 x 1.0	Bolts and Nuts	6	4	0.6
	M8 Bolts and Nuts	13	M8 x 1.25	Bolts and Nuts	13	9	1.3
	M10 Bolts and Nuts	17	M10 x 1.25	Bolts and Nuts	27	20	2.7

8.Sealant Application Locations

	Item Name / Part Name	Thread Lock			Instantaneous Adhesive	Sealing Agent	Bond	Insulation Grease	Teflon Grease	Low Temperature Resistant Lithium Grease	OBM Grease	4 Stroke Engine Oil	Gear Oil	"Shinetsu Silicon" Oil Compound	PTT Fluid	Remarks
		Loctite	Three Bond				Konishi Bond									
		271	1342	1373B	1141	1141C	G17	INS	TEF	LIT	OBM	4ST	GEAR	SOC	ATF	
Engine Block	Cylinder (Liner)											o				Inner Wall
	Piston											o				Ring Grooves, Periphery, Skirt
	Piston Rings											o				Periphery
	Piston Pin											o				Periphery
	Connecting Rod											o				Big and Small Ends
	Metal Bearing [Cylinder Block, Crank Case]											o				Both Faces
	Crankshaft (Thrust Face)											o				Sliding Surface
	Oil Seal [Crank Shaft]									o						Lip
												o				Periphery
	Crank Case - Cylinder Mating Surface					o										Mating Surface
	Valves (IN and EX)											o				Shaft, Stem Head
	Valve Stem Seals (IN and EX)											o				Lip
	Retainer											o				Entire Surface
	Valve Spring Seat											o				Entire Surface
	Valve Spring											o				Entire Surface
	Cam Shaft											o				Bearing and Cam Head
	Oil Seal [Cam Shaft]									o						Lip
												o				Periphery
	Cam Shaft Pulley Bolt		o													Thread
	Rocker Arm											o				Bearing and Slipper Head
	Rocker Arm Shaft											o				Shaft and side
	Tappet Adjusting Screw											o				Entire Surface
	Washer [Rocker Arm, t=0.5]											o				Entire Surface
	Washer [Rocker Arm, t=2.5]											o				Entire Surface
	Spring [for Rocker Arm]											o				Entire Surface
	Fuel Pump											o				O-Ring Periphery, Plunger Tip
	Oil Pump											o				Approx. 2cm3 from intake port and discharge port, and Boss O-Ring
	Oil Pump O-Ring											o				Entire Surface
	Breather Plate		o													Thread
	Cylinder Head Cover Bolts		o													Thread
	Oil Pressure Switch		o													Thread
	Oil Filter											o				Seal
	Oil Filter Bolt		o													Thread
	Plunger Ass'y											o				Interior (Put approx. 1cm^3. Do not attempt to disassemble.)

	Item Name / Part Name	Thread Lock			Instantaneous Adhesive	Sealing Agent	Bond	Insulation Grease	Teflon Grease	Low Temperature Resistant Lithium Grease	OBM Grease	4 Stroke Engine Oil	Gear Oil	"Shinetsu Silicon" Oil Compound	PTT Fluid	Remarks
		Loctite	Three Bond				Konishi Bond									
		271	1342	1373B	1141	1141C	G17	INS	TEF	LIT	OBM	4ST	GEAR	SOC	ATF	
Engine Block	Filler Cap O-Ring											o				Periphery
	Solenoid Switch							o								Terminals
	Plug Cap													o		Spark Plug Insertion Area
							o									High Tension Cable
	Starter Motor							o								Terminals
											o					Apply thin coat to pinion.
	Recoil Starter (Case)		o													Reel Installation Bolt, Thread
										o						Frinction Plate, Reel Shaft, Ratchet, Spiral Spring
	Starter Seal Rubber				o											
	Engine Oil											o				1.8L when filter is replaced
																1.6L when filter is not replaced
Swivel Bracket	Clamp Screws										o					Thread
	Bolt [Upper Mount Retainer]		o													Thread
	Bolt [Lower Mount Bracket]		o													Thread
	Steering Friction [Co-pilot]										o					Thread
	Steering Shaft										o					Sliding area
	Grease Nipples [Bracket Bolts]										o					
	[Co-pilot]										o					Thread
	Drag Link										o					Sliding area
	Bolt [Drag Link Bracket]			o												Thread
PTT	Tilt Cylinder End Screw	o														Thread
	Cylinder Pins (Upper and Lower)											o				Sliding area
	Tilt Stopper Grip						o									
	Tilt Stopper (Shift)										o					Sliding area
	PTT Oil														o	
	O-Ring														o	

	Item Name / Part Name	Thread Lock			Instantaneous Adhesive	Sealing Agent	Bond	Insulation Grease	Teflon Grease	Low Temperature Resistant Lithium Grease	OBM Grease	4 Stroke Engine Oil	Gear Oil	"Shinetsu Silicon" Oil Compound	PTT Fluid	Remarks
		Loctite	Three Bond				Konishi Bond									
		271	1342	1373B	1141	1141C	G17	INS	TEF	LIT	OBM	4ST	GEAR	SOC	ATF	
Drive Shaft Housing and Gear Case	Exhaust Plug [D-Shaft Housing]		o													
	Seal Rubber [Engine Base & Apron]				o											
	Bolt [Pump Case (Upper)]		o													Thread
	Pump Case (Upper)										o					Impeller Sliding Area
	Water Pipe Seal (Lower)										o					Connection
	Drive Shaft [Housing Side]											o				Periphery
	Oil Seal [Engine Base]										o					Lip
	[Pump Case (Lower) : Gear Case Side]											o				Periphery
	Cam Rod Bushing (Pump Case [Lower])										o					Sliding area
	Oil Seal (Pump Case [Lower])										o					Lip
	Pump Case (Lower)												o			O-Ring Groove
	Bolt [Pump Case (Lower)]		o													Thread
	Drive Shaft								o							Spline (Crankshaft Side)
	Needle Bearing [Pinion Gear (B Gear)]												o			
	Needle Bearing [Propeller Shaft]												o			
	Taper Roller Bearing [Forward Gear(A Gear)]												o			
	Push Rod										o					Sliding area
	Oil Seal [Propeller Shaft Housing]										o					Lip
	Housing : Propeller Side											o				Periphery
	O-Ring [Propeller Shaft Housing]										o					
	Bolt [Propeller Shaft Housing]		o													Thread
	Propeller Shaft										o					Spline
	Gear Case												o			Oil Capacity : 280cm³ (9.5fl·oz)
	Bolt [Lower Unir]		o													Thread
	Pinion Nut (B Gear Nut)			o												Thread
Throttle Shift Linkage	Shift Lever Shaft									o						Bearing Sliding Area
	Throttle Link									o						Sliding area
Tiller Handle	Bushing (Handle)										o					Inner and Outer Faces
	Bolt [Steering Bracket]			o												Thread

3

Maintenance

1 Special Tool ····· 3-2
2 Inspection Schedule ····· 3-3
3 Inspection Items ····· 3-4
1) Inspection of Top Cowl ····· 3-4
2) Inspection of Fuel System Piping ····· 3-4
3) Inspection of Fuel Tank ····· 3-5
4) Inspection of Fuel Filter ····· 3-5
5) Replacement of Engine Oil ····· 3-6
6) Replacement of Oil Filter ····· 3-7
7) Inspection of Gear Oil Quantity ····· 3-8
8) Inspection of Water Pump ····· 3-8
9) Replacement of Gear Oil ····· 3-10
10) Inspection of Gear Case (for leakage) ····· 3-11
11) Inspection of Timing Belt ····· 3-12
12) Replacement of Timing Belt ····· 3-13
13) Installation of Timing Belt ····· 3-15
14) Inspection of Spark Plugs ····· 3-17
15) Inspection of Compression Pressure ··· 3-18
16) Inspection and Adjustment of Valve Clearance ··· 3-19
17) Throttle Cable Adjustment of Throttle Link ··· 3-20
18) Inspection of Shift Lever Gear Operations ··· 3-23
19) Inspection of PTT Unit Operation ····· 3-25
20) Inspection of Gas Assistant Unit Operations ··· 3-25
21) Inspection of PTT Fluid Quantity ····· 3-26
22) Inspection of Idle Speed ····· 3-27
23) Inspection of Ignition Timing ····· 3-27
24) Inspection of Anodes ····· 3-28
25) Replacement of Anodes ····· 3-28
26) Inspection of Propeller ····· 3-29
27) Inspection of Thermostat ····· 3-29
28) Inspection of Cooling Water Passage ··· 3-30
29) Flushing with Water ····· 3-31
30) Inspection of Battery ····· 3-33
31) Greasing Points ····· 3-34

1. Special Tool

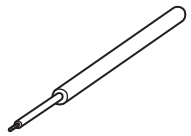	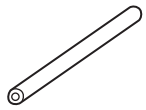	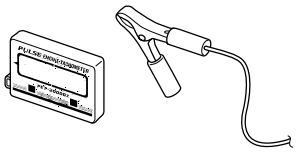	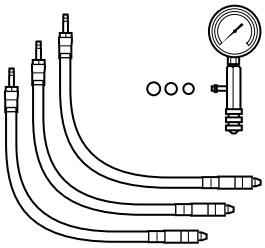
Spring Pin Tool A P/N. 345-72227-0	Spring Pin Tool B P/N. 345-72228-0	Tachometer P/N. 3AC-99010-0	Compression Gauge P/N. 3AC-99030-0
Removing spring pin	Installing spring pin	Measuring engine revolution speed	Measuring compression pressure
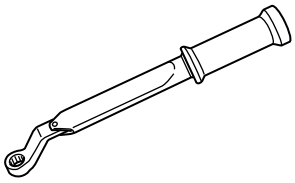	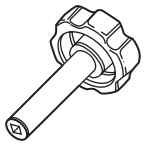	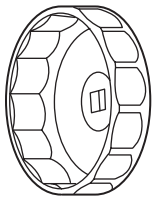	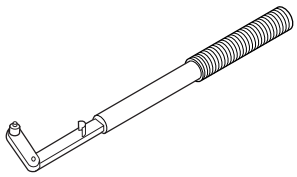
Torque Wrench P/N. 3AC-99070-0	Valve Clearance Driver P/N. 3AC-99071-0	Oil Filter Wrench P/N. 3AC-99090-0	Flywheel Holder P/N. 3AC-99200-0
Adjusting valve clearance	Adjusting valve clearance	Removing/installing oil filter	Removing/installing flywheel nut
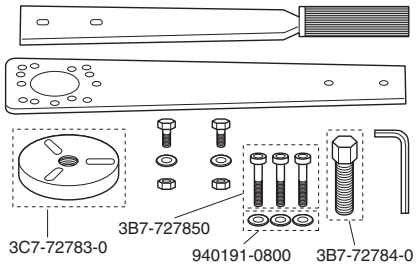			
Flywheel Puller Kit P/N. 3C7-72211-1			
Removing/installing flywheel			

2. Inspection Schedule

	Inspection Part	Inspection Period			Inspection Item	Remarks
		Initial 20 hours or Initial 1 month	50 hours or Every 3 months	100 hours or Every 6 months		
Fuel System	Fuel Filter	o	o	o	Inspection, Cleaning, Replacement	
	High Pressure Fuel Filter				Replace every 200 hours or 2 years	Replace cartridge.
	Piping	o	o	o	Inspection, Replacement	
	Fuel Tank	o	o	o	Cleaning	
Ignition System	Spark Plugs	o		o	Gapl Remove carbon or replace.	0.8 to 0.9 mm (0.032 to 0.035 in)
Starting System	Starter Rope	o	o	o	Wear	
	Starter Motor			o	Accumulation of salt State of battery cord	
	Battery	o	o	o	State of installation, electrolyte level, specific gravity	
Engine	Engine Oil	o		o	Replacement	
	Oil Filter				Inspection, or Replace every 200 hours or 2 years.	Replace cartridge.
	Compression Pressure				Inspect every 200 hours or 1 year.	
	Combustion Chamber				Clean every 200 hours or 2 years.	Include valve lapping if necessary.
	Valve Clearance	o	o		Inspection, Adjustment	
	Timing Belt			o	Wear, Damage, Elongation	
Lower System	Propeller	o	o	o	Bend of blades Damage, Wear	
	Gear Oil	o Replacement	o	o Replacement	Replacement or Refill Check for water leak.	Hypoid Gear Oil (GL5, SAE90)
	Anode		o	o	Corrosion, Wear	Replacement
	Water Pump		o	o	Wear, Crack	Replace every year.
PTT Unit		o		o	Inspection and Refill fluid.	
Warning system			o	o	Functions	
Bolts and Nuts		o	o	o	Retighten.	
Sliding and Rotating Parts Grease Nipple		o	o	o	Apply grease. Inject grease.	

Note : It is recommended to overhaul the machine at 300 hours of operation.

3. Inspection Items

1) Inspection of Top Cowl

Push top cowl to check for looseness and state of closing.

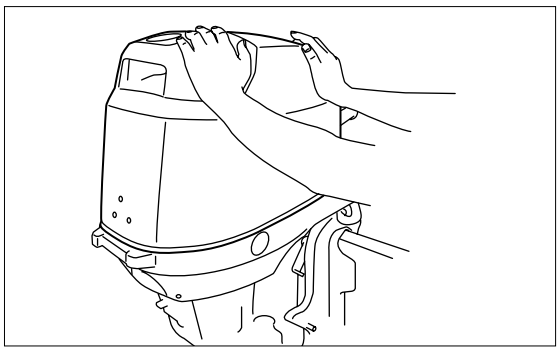

2) Inspection of Fuel System Piping

Check the fuel system piping for fuel leak, dirt, deterioration and damage, and replace or clear parts if necessary.

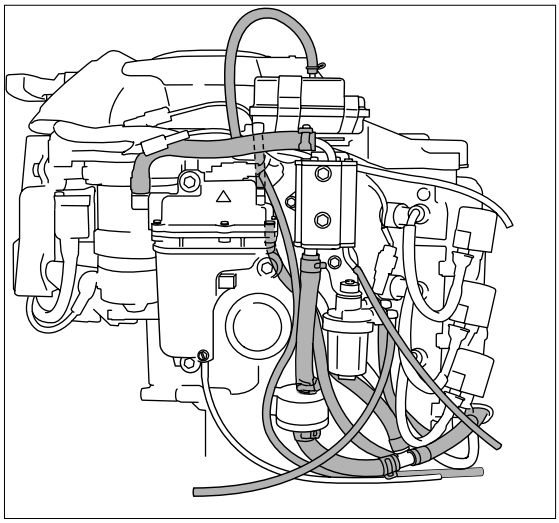

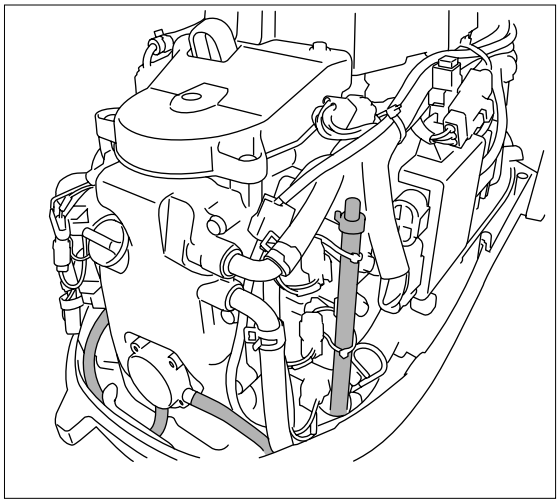

3) Inspection of Fuel Tank

Remove fuel pick up elbow ② of fuel tank ① counterclockwise to remove the part, and clean the filter ③. Remove dirt and water from fuel tank ① if any.

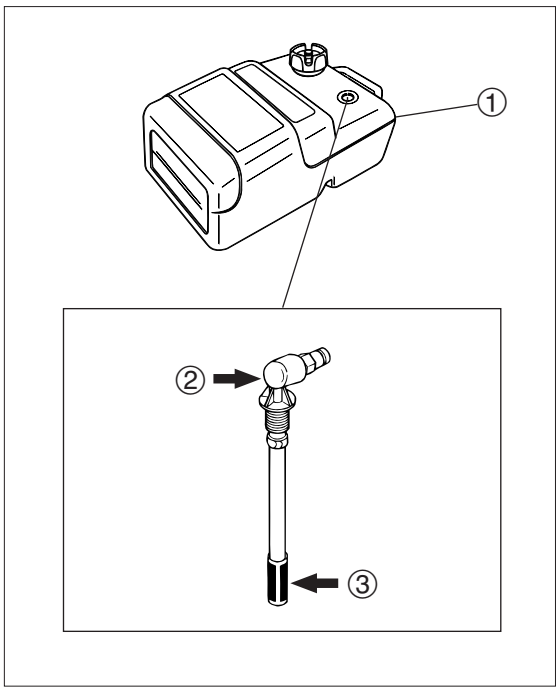

② Fuel Pick Up Elbow
③ Filter

4) Inspection of Fuel Filter

Check fuel filter ④ for dirt, build up of fuel slag, and fuel filter cup ⑤ for invasion of foreign matters and crack. Clean fuel filter cup with gasoline, and replace fuel filter ④ if necessary.

Do not spill fuel when removing fuel filter cup.

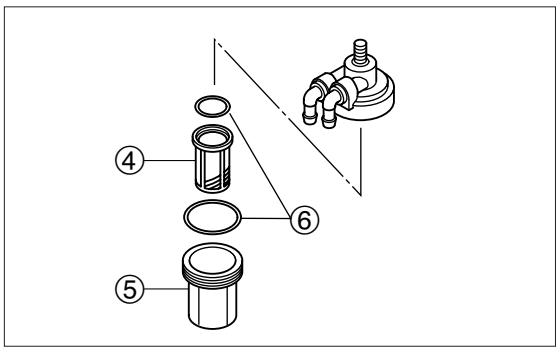

⑥ O Ring **Do not reuse**

5) Replacement of Engine Oil

1. Oil Level

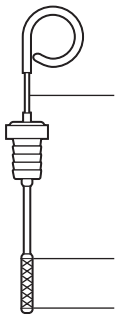

	Quantity of Oil for Full Replacement	
	When oil filter is replaced	When oil filter is not replaced
Upper Limit	1.8L	1.6L
Lower Limit	1.5L	1.3L

2. Oil Specification

Recommended Engine Oil :
4 Stroke Engine Oil
API : SE, SF, SG, SH, SJ, SL
SAE : 10W-30, 10W-40
NMMA : FC-W Certified 10W-30
Quantity of Engine Oil :
When oil filter is replaced: 1.8L
When oil filter is not replaced: 1.6L

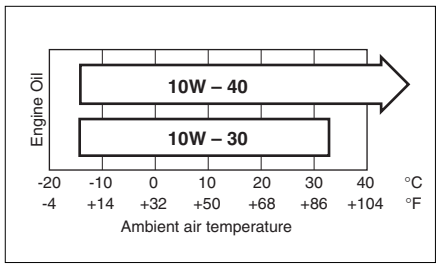

Use oil with viscosity that is suited to ambient air temperature of the operating region.

3. Oil Replacement Procedure

Use of engine containing dirt or water can significantly shorten the lives of rotating and sliding parts of engine.
Oil replacement procedure:

1. Stop engine, tilt-up outboard motor, and lock with tilt stopper ①.
2. Incline outboard motor so that drain bolt ② is directed downward.
3. Remove top cowl and then oil filler cap ③.
4. Place drain oil pan below drain bolt ②.
5. Remove drain bolt ② to drain oil.
6. Tighten drain bolt ② .
   Note: Apply engine oil to the washer (gasket) of drain bolt ②.
7. Disengage tilt lock and tilt down outboard motor.
8. Pour new engine oil into oil inlet ④ until oil level reaches upper limit mark of oil level gauge ⑤.
9. Attach oil filler cap ③ and oil level gauge ⑤, start and run engine for 5 minutes to warm up.
10. Stop engine and check oil level and oil leak after 5 minutes.

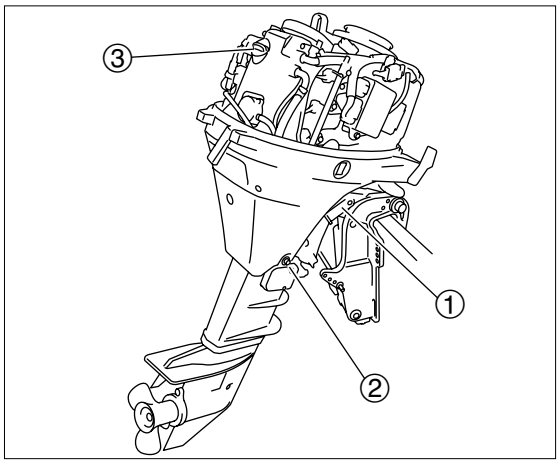

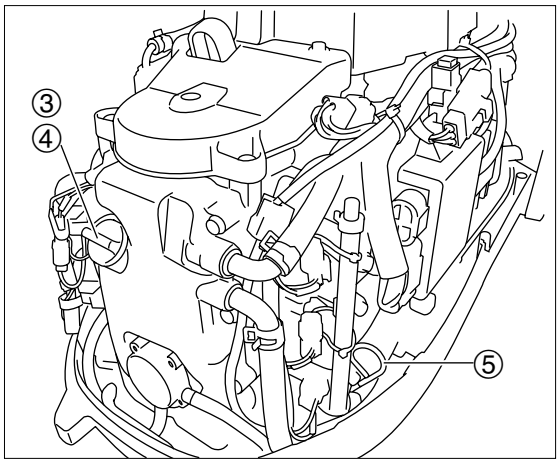

6) Replacement of Oil Filter

1. Drain engine oil.

2. Place a piece of rag below oil filter area, and remove it by using oil filter wrench ①.

   - Replace oil filter 5 minutes or more after stopping engine.
   - Wipe off spilt oil completely.

   Oil Filter Wrench ① :
   P/N. 3AC-99090-0

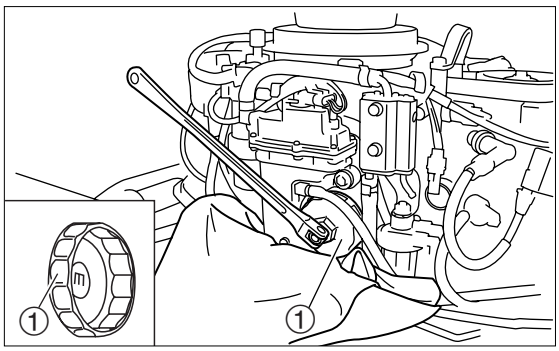

3. Apply thin coat of engine oil to O ring of filter before installing filter. Clean the cylinder at the location where the oil filter is installed.

4. Install oil filter and tighten it to specified torque by using oil filter wrench ①.

   Oil Filter :
   18 N·m (13 lb·ft) [1.8 kgf·m]

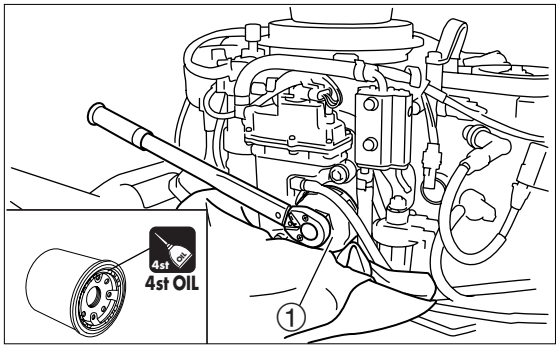

5. Pour engine oil from oil inlet ②.

   Recommended Engine Oil :
   4 Stroke Engine Oil
   API : SE, SF, SG, SH, SJ, SL
   SAE : 10W-30, 10W-40
   NMMA : FC-W Certified 10W-30
   Quantity of Engine Oil :
   When oil filter is replaced: 1.8L
   When oil filter is not replaced: 1.6L

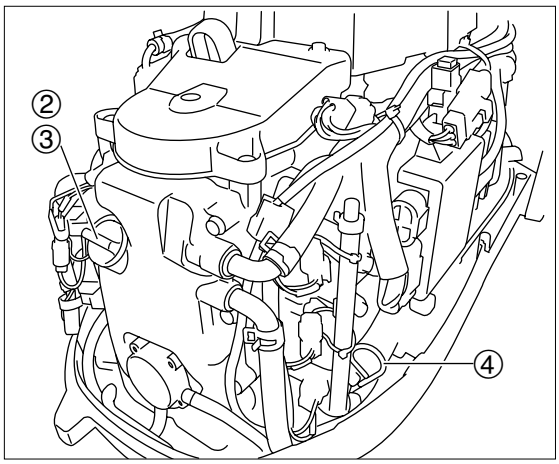

6. Attach oil filler cap ③ and oil level gauge ④, start and run engine for 5 minutes to warm up.

7. Stop engine and check oil level and oil leak after 5 minutes.

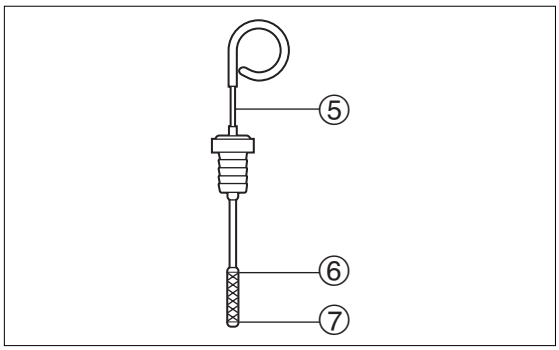

⑤ Oil Level Gauge ⑥ Upper Limit (MAX) ⑦ Lower Limit (MIN)

7) Inspection of Gear Oil Quantity

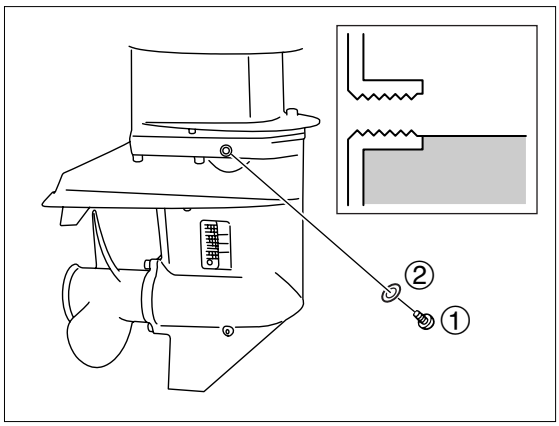

② Washer **Do not reuse.**

1. Tilt down outboard motor to make it vertical.

2. Remove upper oil plug ① and check level of gear oil in the gear case.

   Spill of some oil from plug hole as plug is removed indicates that gear case is filled with specified quantity of gear oil.

3. Add recommended gear oil to specified level if it is lacking.

   Recommended Gear Oil :
   Hypoid Gear Oil
   API : GL-5 SAE : # 90

   If the oil is lacking much, add through lower oil plug hole.

4. Attach upper oil plug ①.

8) Inspection of Water Pump

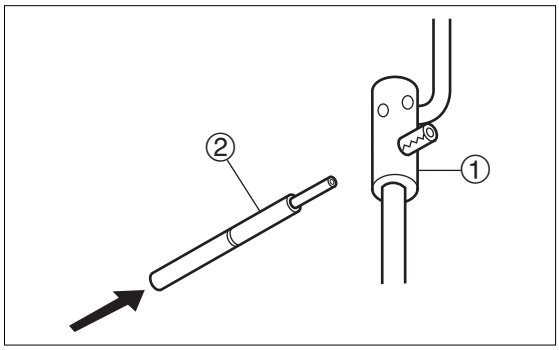

Inspection of water pump does not require removal of power unit from outboard motor body.

1. Remove spring pin and disconnect shift rod.
   (Disconnect shift rod at lower side of shift rod joint ①.)

   - Disconnect shift rod at lower side of shift rod joint ①.
   - Use spring pin tool to remove spring pin.
   - Do not reuse removed spring pin.

   Spring Pin Tool A ② :
   P/N. 345-72227-0

2. Remove lower unit installation bolts, and pull lower unit ass'y downward to remove.

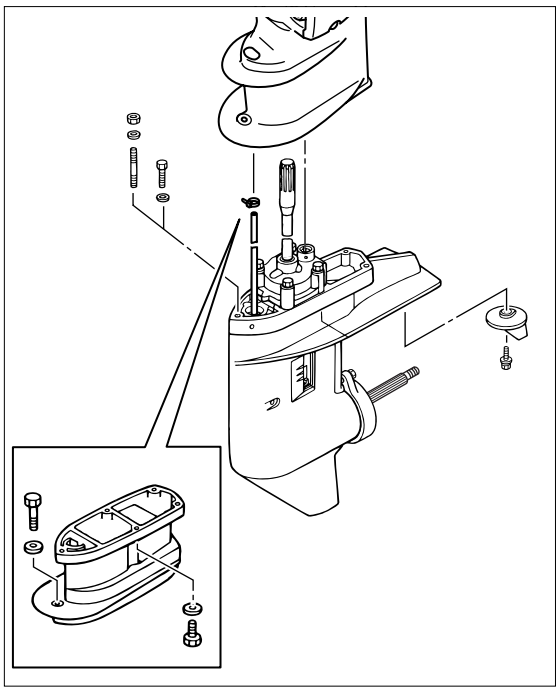

3. Remove pump upper case ③.

4. Remove impeller ④ and check it.

5. Check upper pump case for deformation. Replace if necessary.

6. Check impeller ④ and pump case liner ⑤ for crack and wear. Replace if necessary.

7. Check key ⑥ and drive shaft groove ⓒ for wear. Replace if necessary.

8. Reinstall the components removed. For details, refer to Chapter 6.

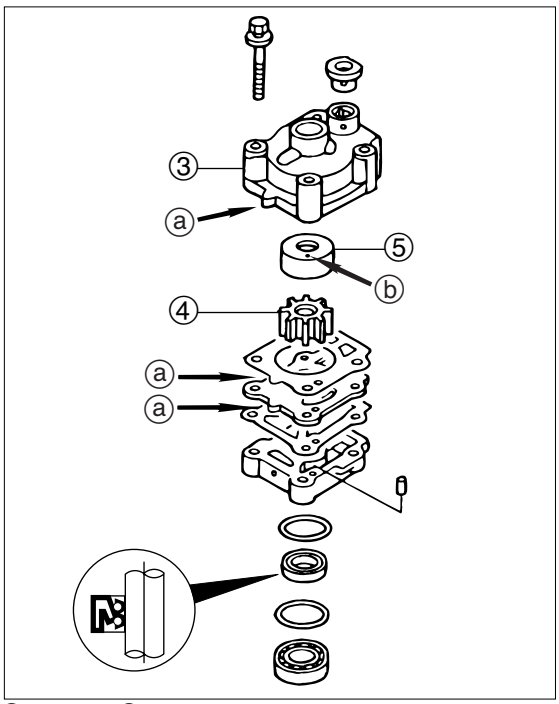

ⓐ Projection ⓑ Hole

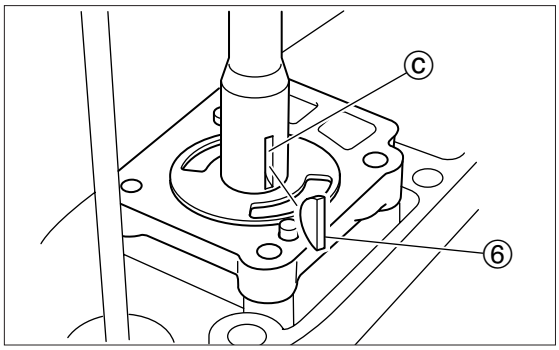

9) Replacement of Gear Oil

1. Tilt outboard motor a little as shown.

2. Place drain oil pan below drain bolt ①, remove lower oil plug ① and then upper oil plug ② to drain oil.

   Remove lower oil plug first when draining.

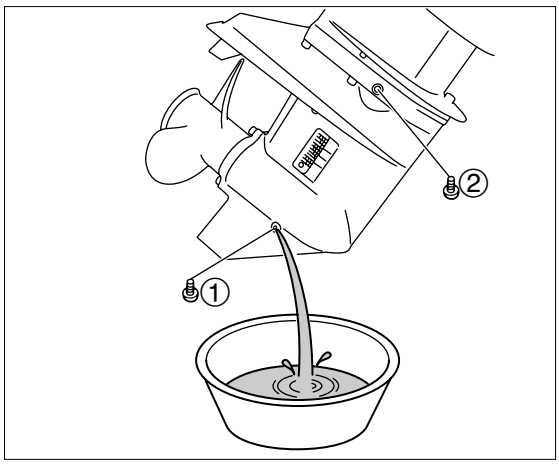

3. Check gear oil for presence of metal particles, change of color (abnormal if clouded), and viscosity. Check lower unit internal components if necessary.

4. Fill with gear oil (from oil tube or pump) through lower plug hole ① until gear oil starts to spill from upper oil plug hole ⓐ without air bubble.

   Recommended Gear Oil :
   Hypoid Gear Oil
   API : GL-5 SAE : #90
   Quantity of Gear Oil :
   350 cm^3 (11.8 fl.oz)

   Use lower plug hole when filling with gear oil. Upper hole cannot be used because doing so will not allow air to evacuate from gear case.

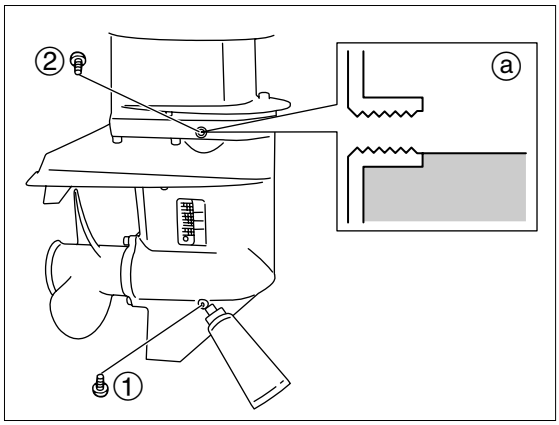

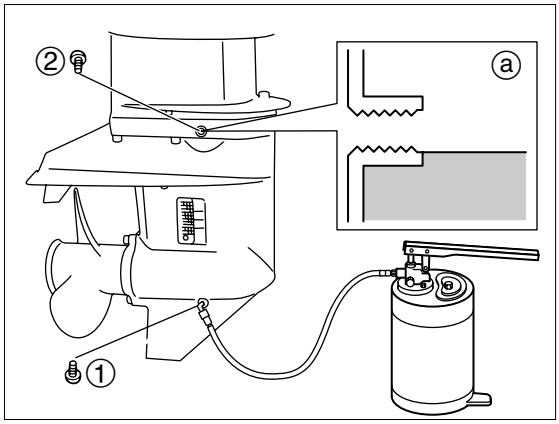

5. Attach new gasket and upper oil plug ②, and then new gasket and lower oil plug ① immediately.

   When fully filled with oil, attach upper oil plug first.

10) Inspection of Gear Case (for leakage)

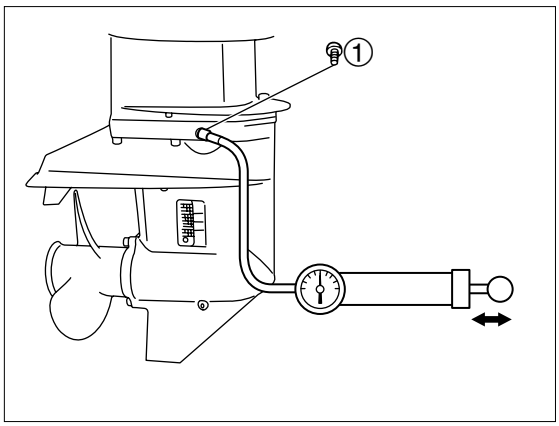

1. Drain gear oil.

2. Remove upper oil plug ① and connect a commercially available leakage tester to this hole.

3. Apply specified pressure to gear base, and check if the pressure is maintained without further compression for 10 seconds.

Specified Gear Case Maintained Pressure :
0.069 MPa (10 PSi) [0.7 kgf/cm^2]

- Rotating propeller shaft while maintaining pressure and testing with gear oil drained make it easy to find leakage due to wear of oil seal lip.
- Depressurize gear case and cover oil plug area with a piece of rag before disconnecting leakage tester.

⚠ CAUTION

Do not apply pressure to gear case over specified value.
Doing so can cause damage to oil seal.

4. If the specified pressure cannot be maintained, check oil seals of drive shaft and propeller shaft and O ring of shift shaft , propeller shaft housing and water pump case lower for damages.

11) Inspection of Timing Belt

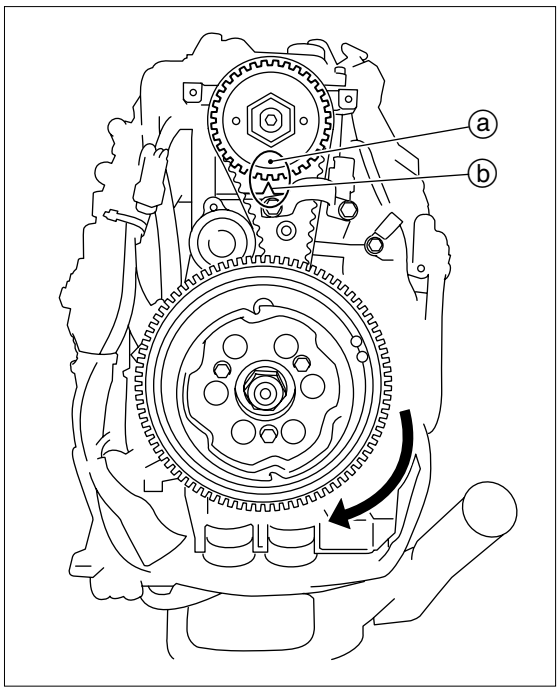

1. Remove upper starter lock cable, and then recoil starter and belt cover.

2. Check timing belt inner and outer surfaces for cracks, damages and wear while rotating flywheel clockwise with hands. Replace if necessary.

3. Rotate flywheel clockwise to bring "●I" mark ⓐ of cam shaft pulley to "▲" mark ⓑ of cylinder head.

   No.1 piston is to be at top dead center of compression stroke.

4. Remove belt tensioner cap and loosen bolt by using tool until it can be turned with hand.

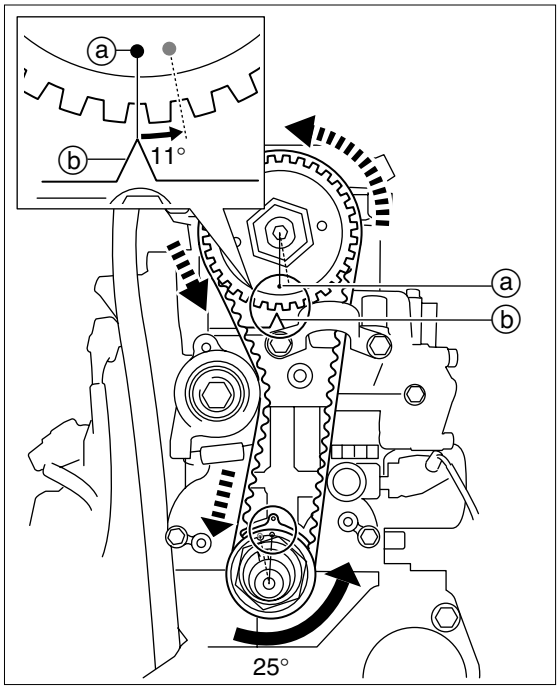

5. Turn flywheel approximately 25 degrees counterclockwise to move belt tensioner back until cam shaft pulley shifts one tooth (approximately 11 degrees). (Belt gets soft at port side.)

6. Tighten belt tensioner bolt to specified torque.

   Belt Tensioner Bolt :
   27 N·m (20 lb·ft) [2.7 kgf·m]

7. Attach cap to belt tensioner.

8. Reinstall recoil starter and belt cover.

9. Reconnect upper starter lock cable.

12) Replacement of Timing Belt

1. Disconnect upper starter lock cable.

2. Remove recoil starter, belt cover and starter pulley.

3. Rotate flywheel ① clockwise to bring " ●I " mark ⓐ of cam shaft pulley ② to " ▲ " mark ⓑ of cylinder head.

> No.1 piston is to be at top dead center of compression stroke.

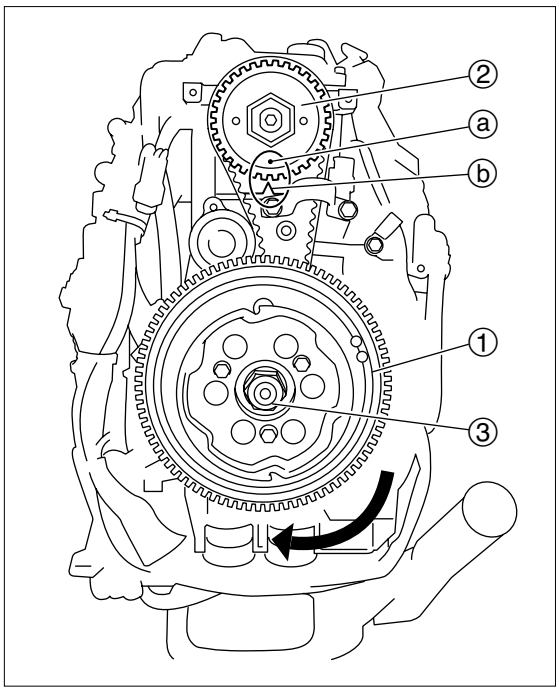

4. Loosen flywheel nut ③.

> **⚠ CAUTION**
>
> **Apply forces to tools toward directions as shown, and perform work taking care not to allow flywheel holder to remove.**

> A **Flywheel Holder ④ :**
> P/N. 3AC-99200-0
> B **Flywheel Puller Kit ⑤ :**
> P/N. 3C7-72211-1

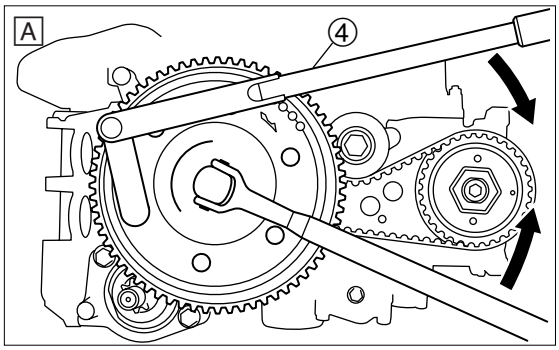

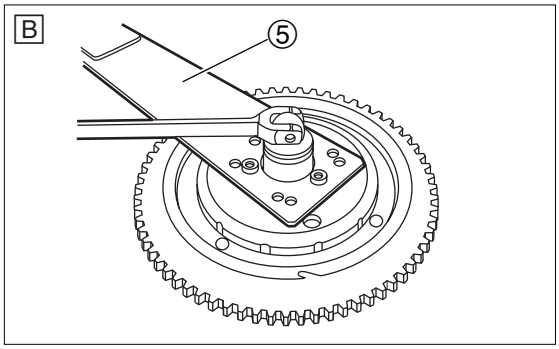

5. Remove flywheel and then key

⚠ CAUTION

To prevent damages to engine and special tools, tighten flywheel puller set bolts evenly and keep flywheel puller parallel to flywheel while working.

Screw puller onto crankshaft end until flywheel is disengaged from tapered section of crankshaft.

A **Flywheel Holder :**
P/N. 3AC-99200-0
A **Flywheel Puller :**
Use puller included in the following puller kit.
B **Flywheel Puller Kit :**
P/N. 3C7-72211-1

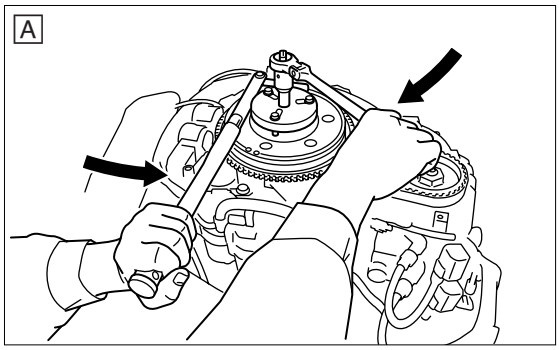

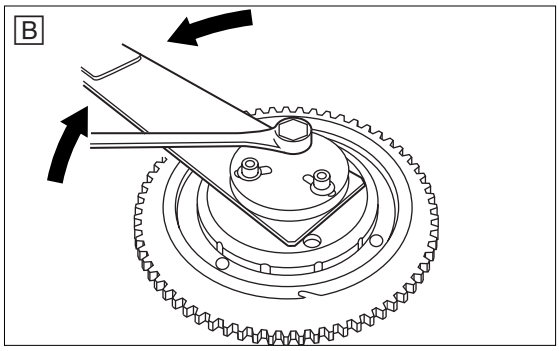

6. Disconnect couplers (4) of alternator and pulser coils, and then, remove alternator and coil bracket ass'y.

7. Remove belt tensioner cap, and loosen tensioner bolt ③ by using a tool until it can be turned with a hand.

8. Remove engine hanger.

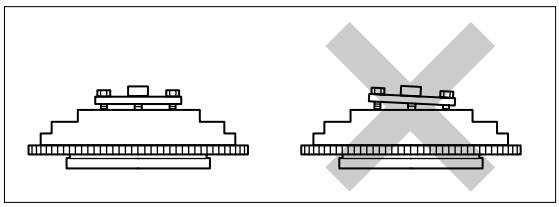

9. Remove timing belt ④ from cam shaft pulley and then from timing pulley.

⚠ CAUTION

Do not turn timing pulley and cam shaft pulley with timing belt removed. Doing so can make pistons and valves interfere with each other, resulting in damages to these parts.

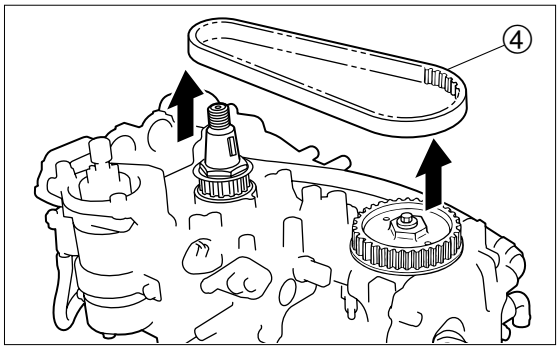

10. Check that cam shaft pulley's "●I" mark ⓐ and cylinder head's "▲" ⓑ, and belt guide's ⑤ "●" mark ⓒ and cylinder's "●" ⓓ are aligned with each other respectively.

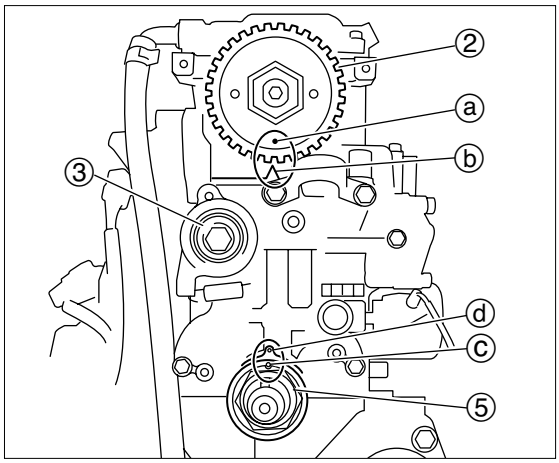

13) Installation of Timing Belt

1. Align locating lines ⓐ of new timing belt ① as shown, face part number size up, and engage belt with timing pulley ② and then with cam shaft pulley ③.

⚠ CAUTION

- **Be careful not give damage to timing belt when installing.**
- **Do not twist timing belt, bring inside out, or bend sharp, or it may be damaged.**
- **Be careful not to allow oil or grease to adhere to timing belt.**

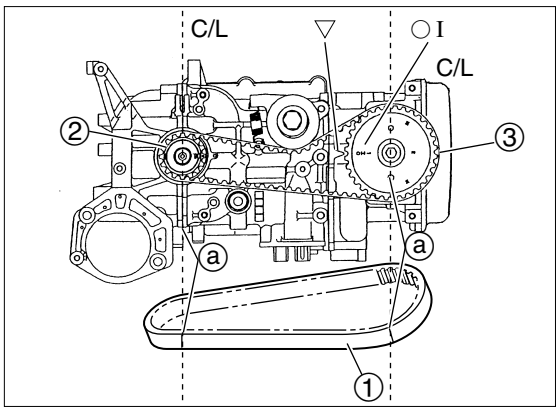

① Timing Belt ③ Cam Shaft Pulley
② Timing Pulley

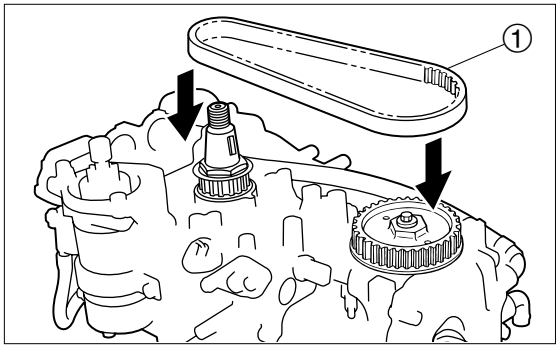

2. Tightening belt tensioner bolt ④ temporarily, turn timing pulley ② clockwise twice, and check that locating marks of both pulleys (ⓑ and ⓒ, and ⓓ and ⓔ) are aligned with each other respectively.

3. Loosen belt tensioner bolt ④ by using a tool until it can be turned by hand.

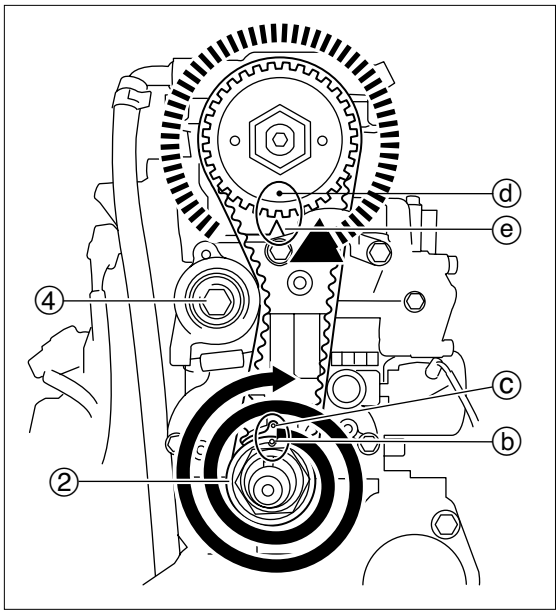

4. Turn timing pulley ② approximately 25 degrees counterclockwise to move belt tensioner ④ until cam shaft pulley ③ shifts one tooth (approximately 11 degrees).

> The above step prevents excessive tensioning of belt tensioner and allows fixing of the component to a properly adjusted position.

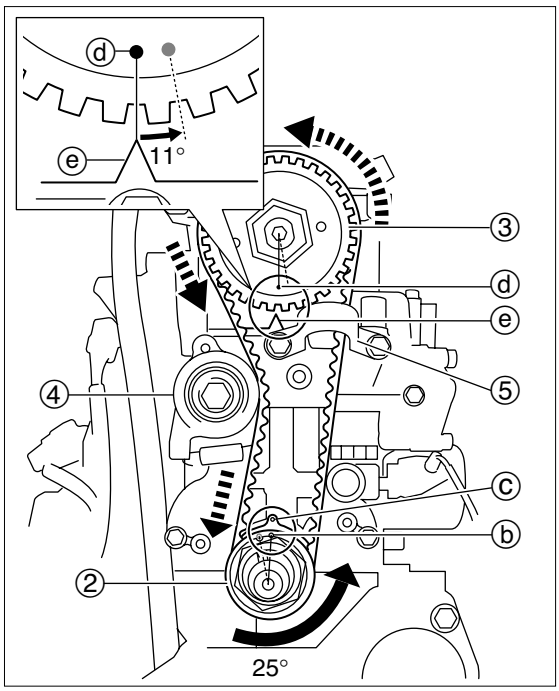

5. Tighten belt tensioner ④ bolt to specified torque.

Belt Tensioner Bolt :
27 N·m (20 lb·ft) [2.7 kgf·m]

6. Reinstall hanger ⑤ and tighten bolt to specified torque.

Hanger bolt :
23 N·m (17 lb·ft) [2.3 kgf·m]

7. Install coil bracket ass'y and alternator, apply "Three Bond" 1342 to bolts, and tighten them to specified torque. Reconnect couplers (4) of alternator and pulser coil.

Coil bracket and Alternator Bolts :
6 N·m (4 lb·ft) [0.6 kgf·m]

8. Reinstall key and flywheel ⑥ and tighten nut to specified torque.

⚠ CAUTION

Apply forces to tools toward directions as shown, and perform work taking care not to allow flywheel holder ⑦ to remove.

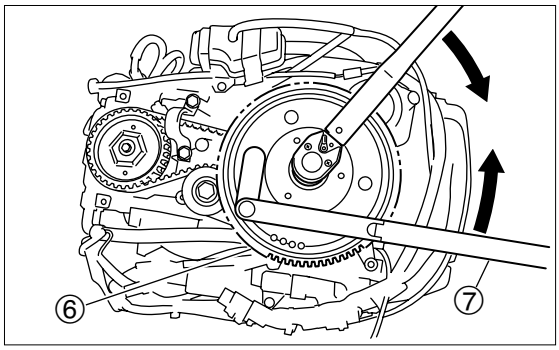

Flywheel Holder ⑦ :
P/N. 3AC-99200-0

Flywheel Nut :
150 N·m (108 lb·ft) [15 kgf·m]

9. Reinstall starter pulley, recoil starter and belt cover.

10. Reconnect upper starter lock cable.

14) Inspection of Spark Plugs

1. Remove plug cap and then spark plugs.

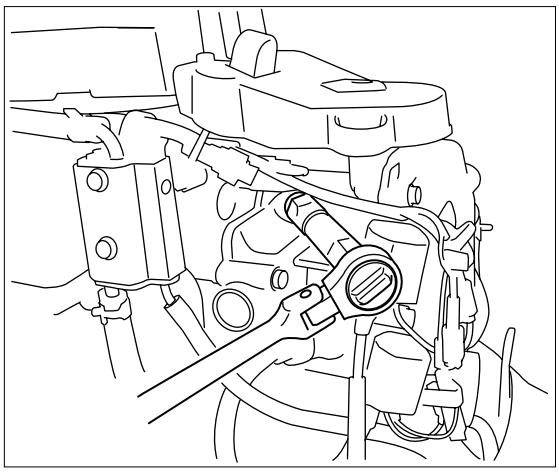

2. Use spark plug cleaner or wire brush to clean spark plug electrodes ① . Replace if necessary.

3. Check electrodes ① for corrosion or excessive build up of carbon, and washer ② for damage. Replace if necessary.

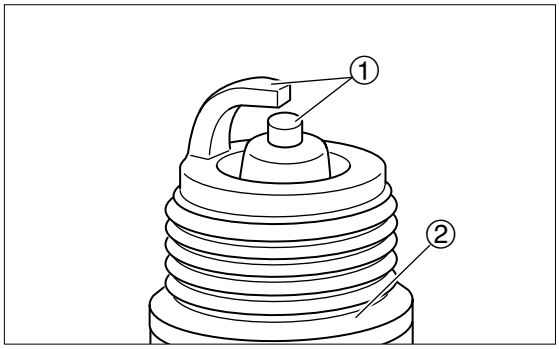

4. Check spark plug gap ⓐ. Replace if gap is over specified value. Adjust gap if it is less than specified value.

Spark Plug Gap ⓐ : Standard	0.8 to 0.9mm (0.032 to 0.035 in)
Functional Limit :	1.2 mm (0.047 in)
Specified Spark Plug :	DCPR6E [NGK]

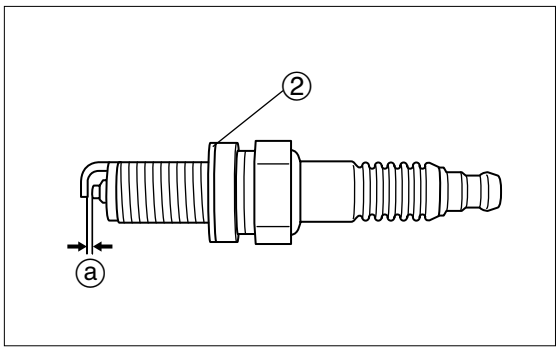

5. Install spark plug, fully hand-tighten, and then use plug wrench to tighten to specified torque.

Spark Plugs :	18 N·m (13 lb·ft) [1.8 kgf·m]

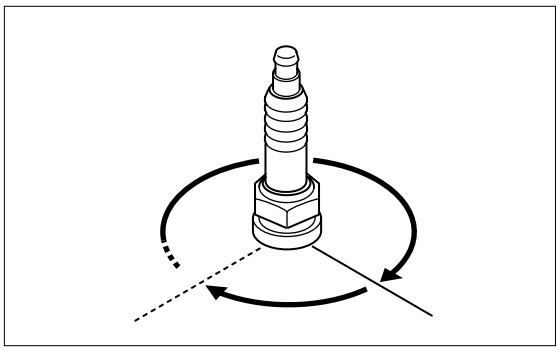

15) Inspection of Compression Pressure

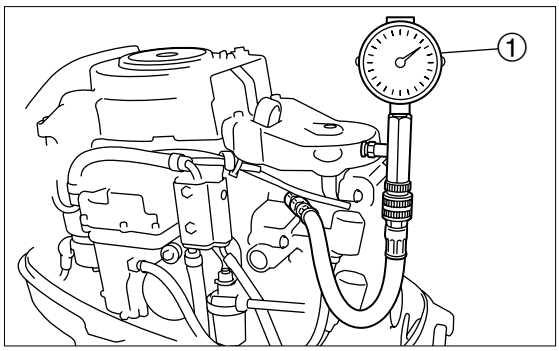

1. Start and run engine for 5 minutes to warm up, and then stop.

2. Shift gear into neutral (N).

3. Remove lock plate (stop switch lanyard) from stop switch.

⚠ CAUTION

Remove lock plate (stop switch lanyard) from stop switch before measuring compression pressure. This will prevent engine from accidental starging.

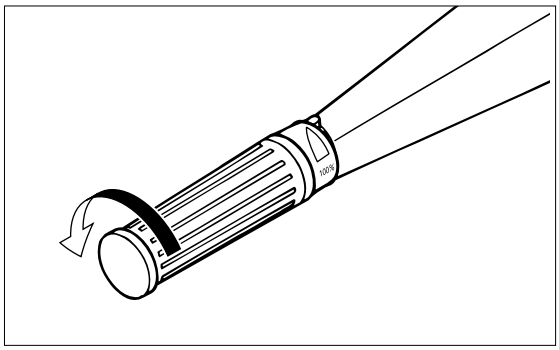

4. Remove all plug caps and then all spark plugs.

⚠ CAUTION

Clean areas around spark plugs on the cylinder before removing spark plugs to prevent dirt from entering cylinder.

5. Install compression gauge to plug hole.

Compression Gauge :
P/N. 3AC-99030-0

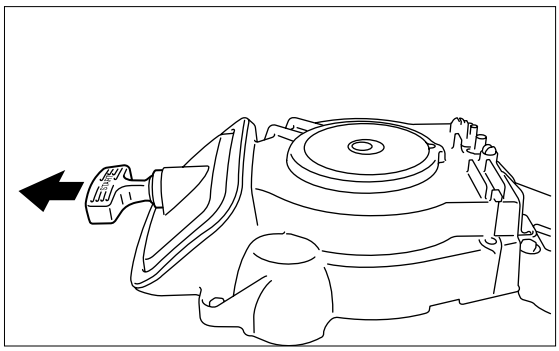

6. Fully open throttle, crank engine until compression gauge indication stabilizes, and then measure compression pressure.

Compression Pressure (Reference) :
1.13 MPa (164 PSI) [11.5 kgf/cm2] ± 10 %

Compression pressure is affected much by cranking speed, and normally changes in the range from 10 % to 20 %.

7. If compression pressure is below specified value or varies much among cylinders, put small amount of engine oil into cylinders, and perform the test again.

- If compression pressure increases after the above measure, check pistons and piston rings for wear. Replace if necessary.
- If compression pressure does not increase after the above measure, check valve clearances, valves, valve seats, cylinder sleeves, cylinder head gaskets and cylinder head. Adjust or replace if necessary.

16) Inspection and Adjustment of Valve Clearance

- Perform inspection and adjustment of valve clearances when engine is cold.
- No.1 piston is to be at top dead center of compression stroke.

1. Disconnect starter lock cables, and then recoil starter, belt cover, spark plugs, and cylinder head cover.

2. Rotate flywheel clockwise to bring "●I" mark of cam shaft pulley ① to "▲" mark ⓐ of cylinder head.

3. Check and adjust No. 1 cylinder's intake and exhaust valve clearances.
   - Insert thickness gauge in the gap between valve end ② and adjust screw ③.
   - Loosen lock nut ④.
   - Turn adjust screw ③ to adjust valve clearance.
   - Tighten lock nut ④.
   - Check valve clearance again.

   Valve Clearance :
   Intake valve : 0.15±0.02 mm (0.006±0.001 in) ⓓ
   Exhaust valve : 0.20±0.02 mm (0.008±0.001 in) ⓔ

   - When loosening or tightening lock nut, tighten adjust screw by using valve clearance driver.
   - Be sure to use torque wrench.

   Lock nut :
   7 N·m (5 lb·ft)[0.7 kgf·m]

   Valve Clearance Driver ⑤ :
   P/N. 3AC-99030-0
   Torque Wrench ⑥ :
   P/N. 3AC-99070-0

4. Rotate flywheel clockwise to bring "Ⅲ" mark of cam shaft pulley ① to "▲" mark ⓐ of cylinder head.

5. Check and adjust No. 3 cylinder's intake and exhaust valve clearances in the same procedure as No. 1 cylinder.

6. Check and adjust No. 2 cylinder's valve clearances in the same procedure as No. 1 cylinder.

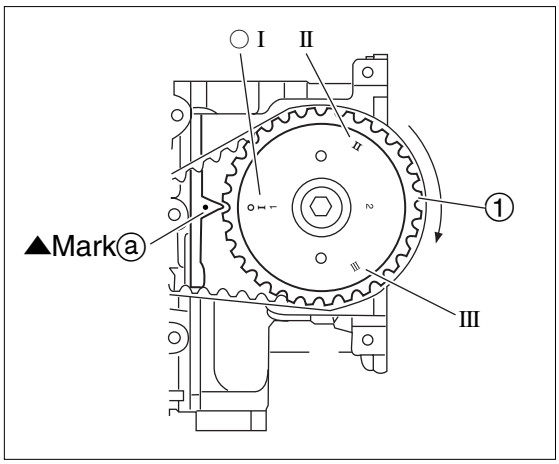

① Cam Shaft Pulley

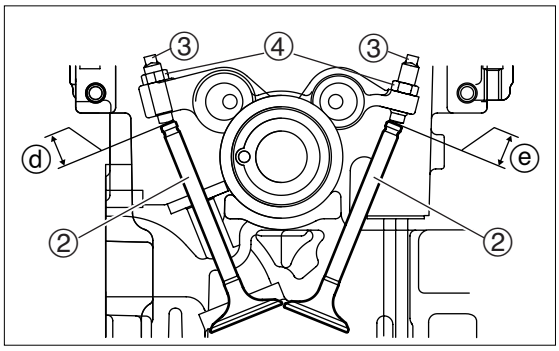

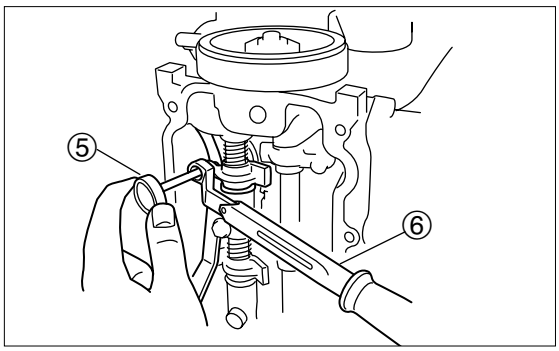

⑤ Valve Clearance Driver (Concaved Tip, Square, Width Between Two Opposing Sides : 3mm)
⑥ Torque Wrench (10mm tip wrench)

17) Throttle Cable

Adjustment of Throttle Link

1. Set remote control lever to forward (F) WOT position. Or, set throttle grip to WOT position.

2. Remove throttle link rod ③ from throttle drum ① and throttle cam ②.

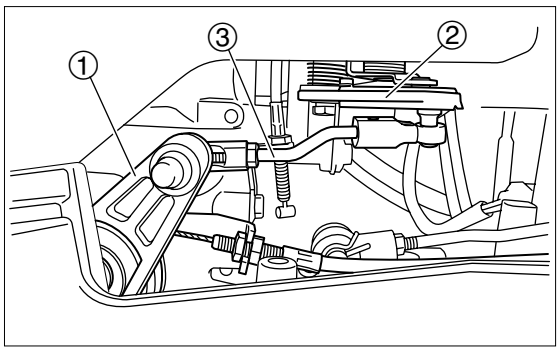

3. Check length ⓐ of throttle link rod. If necessary, loosen lock nut ④ and adjust length.

Throttle Link Rod Length ⓐ : Standard
85 mm (3.346 in)

Connect joint ⑤ side without lock nut to throttle body side (throttle cam ②).

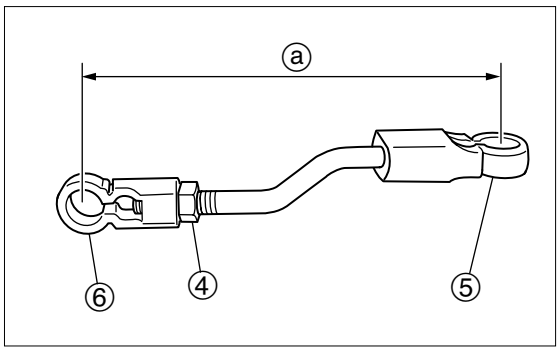

4. Contact throttle valve with stopper ⑤ and fix it at full open position.

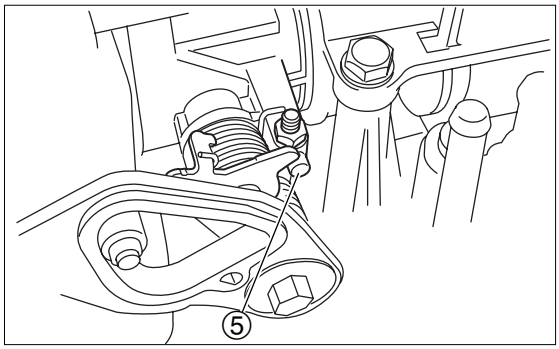

5. With throttle valve fixed at full open position, connect joint ⑤ of throttle link ③ to throttle cam ②.

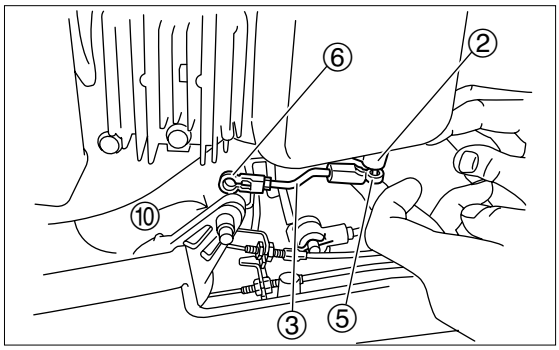

⑩ back side

6. Contact stopper section ⑪ of throttle drum ① with stopper section ⑨ of cable bracket ⑦ with throttle in full open position as shown, and adjust length of throttle link rod ③ so that position of joint ⑥ of throttle link rod ③ is at joint ⑩ of throttle drum ②.

7. Connect throttle ling rod ⑥ to throttle drum ⑩, and tighten lock nut ① .

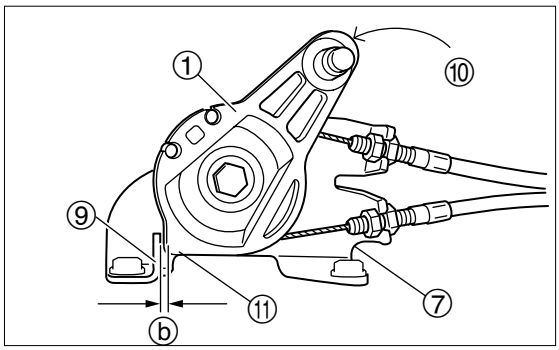

ⓑ Contact. ⑩ back side

8. Attach throttle cable ⑪.
(Tiller Handle Model)
- Put throttle cable ⑪ on the throttle drum ① and attach it to throttle cable bracket ⑧.
- Adjust position of lock nut ⑫ of throttle cable ⑪ so that throttle grip can reach full open and full close positions.

Adjust cable tension so that it moves approximately 1mm when pushed lightly with a finger.

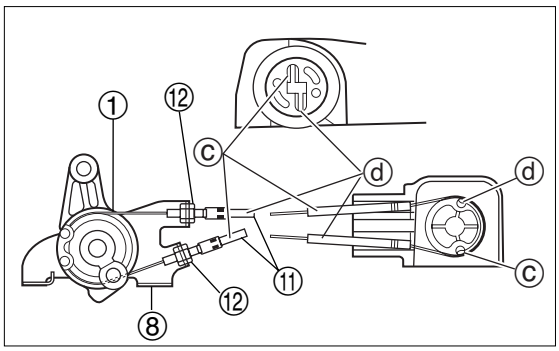

9. Set remote control lever ⑬ to neutral (N) ⓖ, and check that neutral throttling lever ⑭ is at full close position ⓕ.
(Remote Control Model)

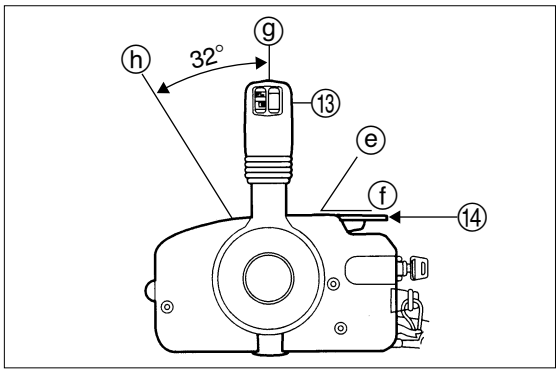

10. Set shift arm ⑮ to forward (F), neutral (N), reverse (R) and then to neutral (N) positions.
(Remote Control Model)

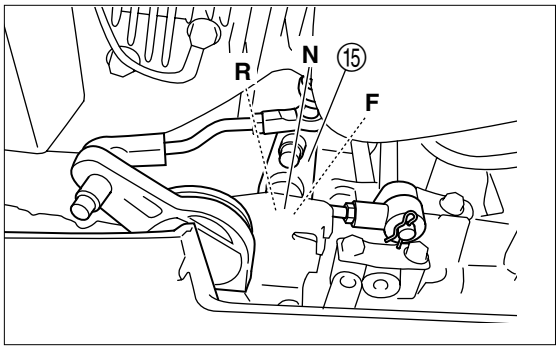

11. Set throttle drum ① to full close position.
(Remote Control Model)

Check that throttle valve contacts with full close stopper.

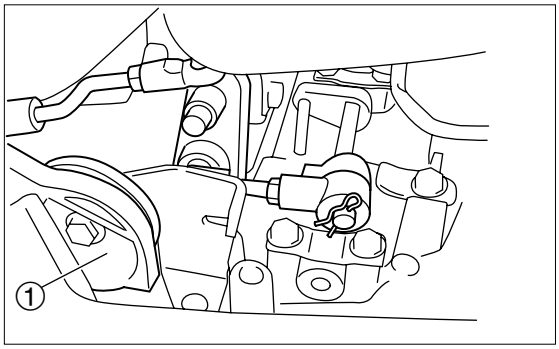

12. Adjust screw-in length of cable joint ⑯ so that hole of cable joint is brought to shift arm pin ⑰.

⚠ WARNING

Screw-in remote control cable joint at lease 10mm ⓘ.

After adjusting remote control cable joint, fix it with remote control cable fully pushed in.

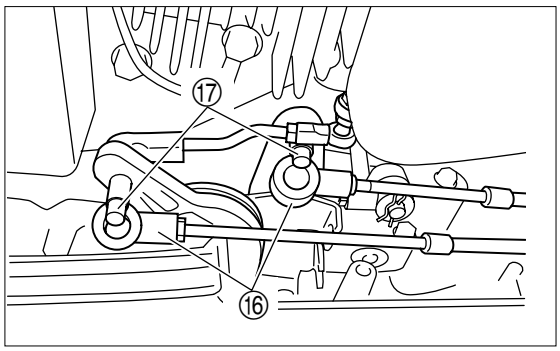

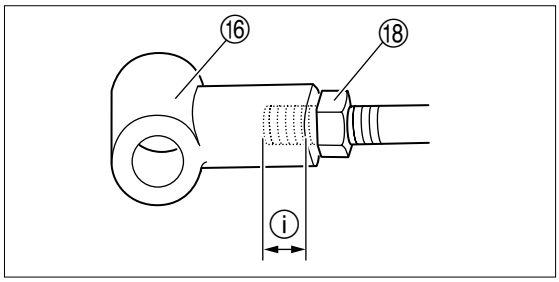

13. Lock joint with nut ⑱, put it on the pin, and secure with washer and snap pin ⑲.

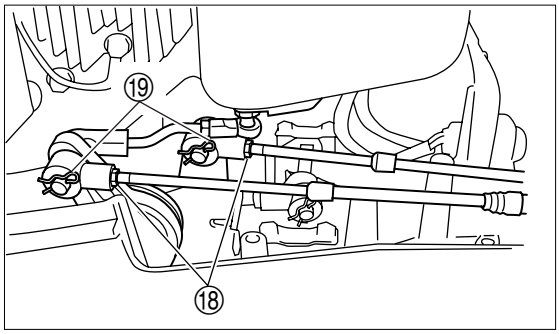

14. Check that shifting control lever ⑬ forward (F) by approximately 32 degrees (ⓙ) , where it is stopped once, makes the gear engage, and fully shifting the lever makes throttle valve fully open, and then, check that shifting the lever reverse (R) by approximately 32 degrees (ⓛ), where it is stopped once, makes the gear engage, and fully shifting the lever makes throttle valve fully open.
Then, check that, when control lever is returned to neutral position (N) ⓚ, throttle valve is fully closed ⓜ. Since throttle position sensor (TPS) operates incorrectly if throttle valve does not contact with full close stopper with the valve fully closed, readjust cable joint position at outboard motor side and reinstall it if the valve does not contact with full close stopper in this case.

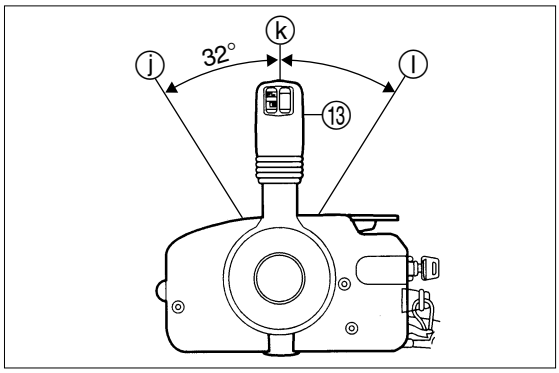

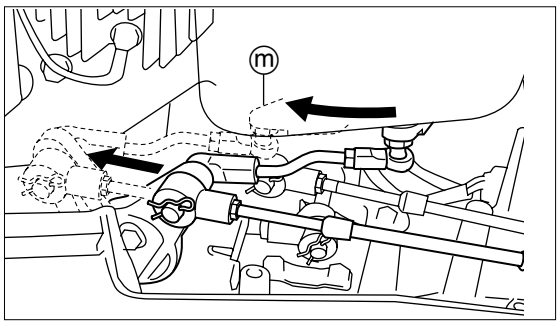

15. Check if throttle valve operates smoothly, and repeat steps 1. to 14. as necessary.

16. Reconnect cord ass'y connectors.

> **⚠ CAUTION**
>
> **Do not disconnect cord ass'y while engine operates.**

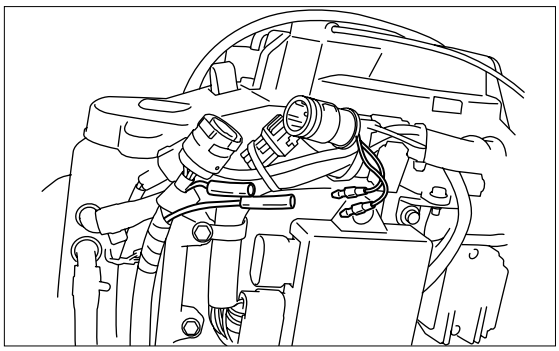

17. Run cord ass'y ㉑ and remote control cables ㉒ through grommet ⑳ located on the front of bottom cowl. Attach remote control cable groove to bracket, and then fix it to bottom cowl.

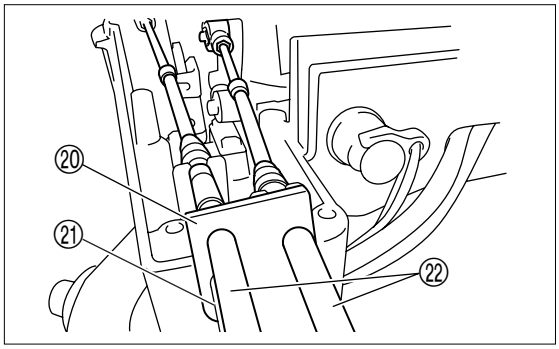

18) Inspection of Shift Lever Gear Operations

Shift gear from neutral (N) to forward (F), neutral (N), and then to reverse (R) to check that shift operation is performed smoothly. Adjust shift link rod ① length and shift cable position if necessary.

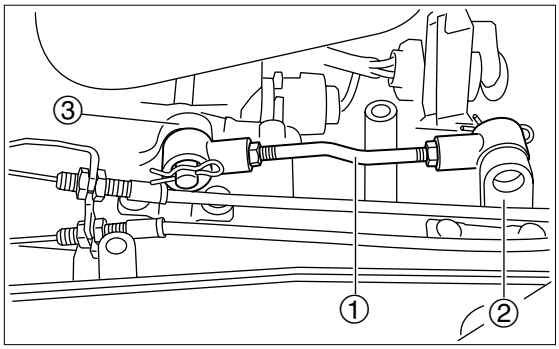

1. Shift gear into neutral (N).

2. Remove shift link rod ①.

3. Check and adjust standard length ⓐ of shift link rod ①.

> **Remote control model ⓐ :** 52 mm (2.05 in)
> **Tiller handle model ⓐ :** 144.5 mm (5.69 in)

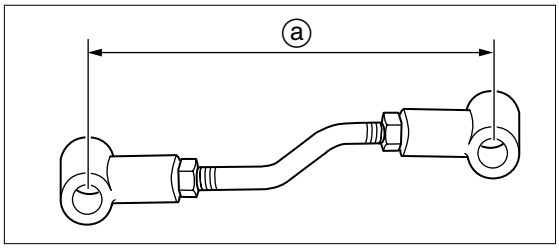

4. Check that shift lever shaft ③ and shift arm ② are vertical.

5. Perform shift adjustment after assembling lower unit. (Tiller Handle Model)

Remark: The adjustment is difficult when power head has been installed.
Loosen shift lever stopper bolt ④.
Set shift lever shaft ass'y ⑤ fully to forward, adjust shift lever stopper ⑥ position, and then, tighten shift lever stopper bolt ④.
Separate shift lever to check that operation from neutral (N) to forward (F) to neutral (N) to reverse (R) is normal and forward and reverse movements are equal to each other.

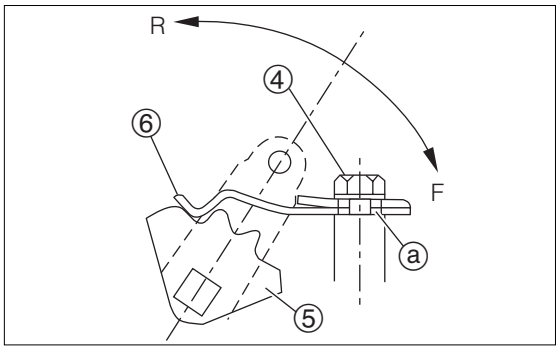

ⓐ Oval Hole

6. Loosen lock nut ⑧, remove snap pin ⑨ and washer, and then remote control cable joint ⑦. (Remote Control Model)

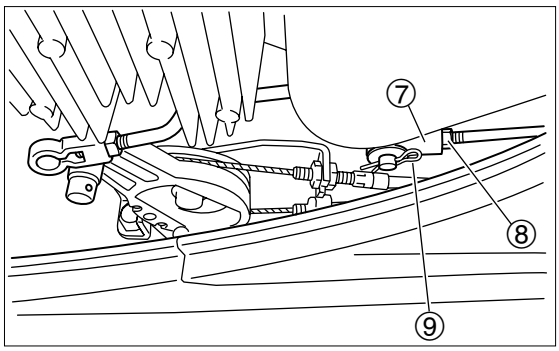

7. Adjust length so that remote control cable joint ⑦ hole aligns with set pin. (Remote Control Model)

⚠ WARNING

Screw-in remote control cable joint at lease 10mm ⓑ.

When adjusting remote control cable joint, adjust it with remote control cable fully pushed in.

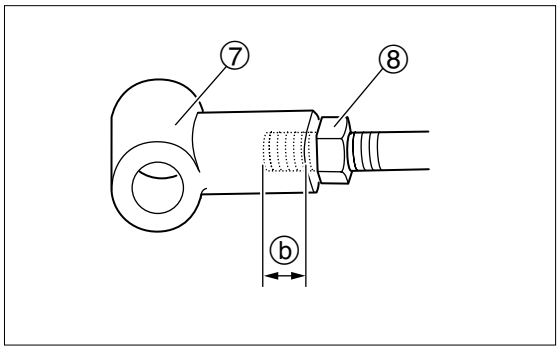

8. Reconnect remote control cable joint ⑦, attach snap pin ⑨, and tighten lock nut ⑧. (Remote Control Model)

9. Check if gear shifts smoothly, and repeat steps 2. to 8. as necessary.

19) Inspection of PTT Unit Operation

1. Tilt up and down outboard motor several times to check that PTT unit operates smoothly in full range. Check PTT fluid quantity if necessary. Refer to "Inspection of PTT Fluid Quantity" described in the next page.

   Check that PTT motor produces noise of normal revolution.

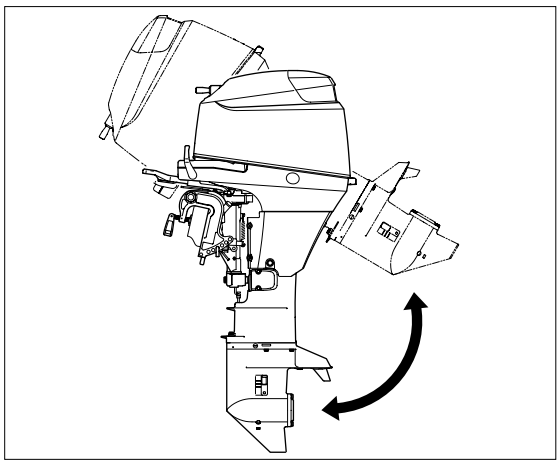

2. Fully tilt up outboard motor, lock with tilt stopper ①, and check that stopper ① lock mechanism functions normally.

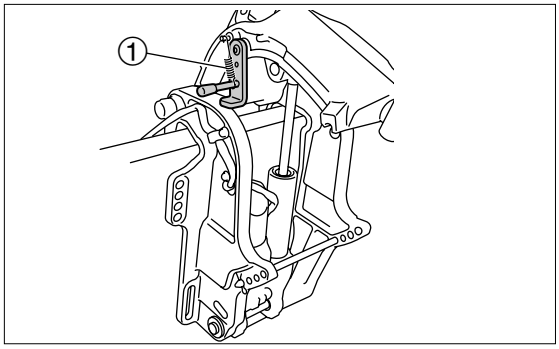

20) Inspection of Gas Assistant Unit Operations

1. Tilt up and down outboard motor several times to check that gas assistant unit operates smoothly in full range.

2. Fully tilt up outboard motor, lock with tilt stopper ②, and check that stopper ② lock mechanism functions normally.

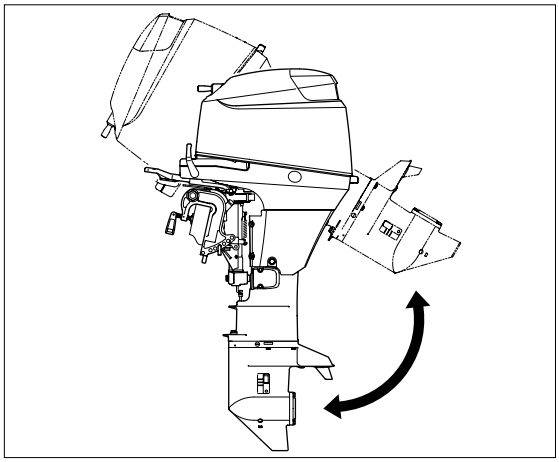

3. Tilt up outboard motor a little, set lock lever ③ to locking position, and check that holding mechanism of gas shock absorber ① functions normally.

   In case any failure is found as a result of inspection, replace gas shock absorber. Gas shock absorber cannot be disassembed.

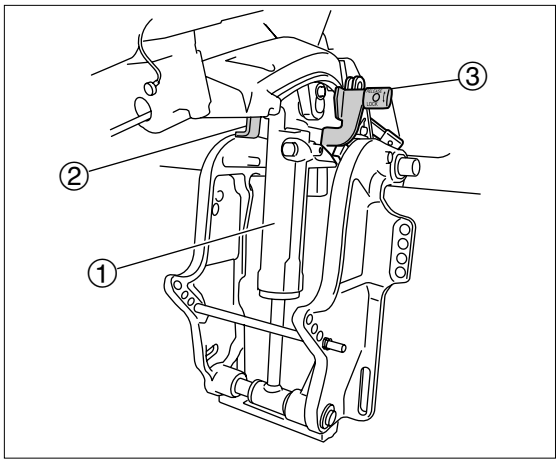

21) Inspection of PTT Fluid Quantity

1. Fully tilt up outboard motor and lock with tilt stopper ①.

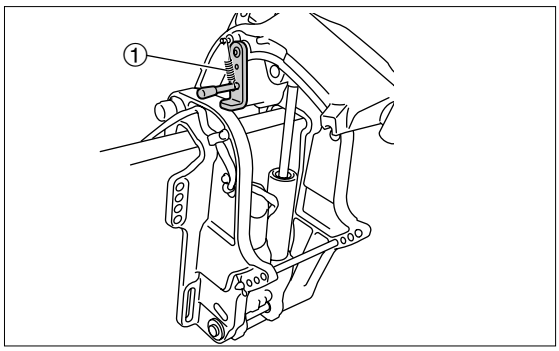

⚠ WARNING

Be sure to lock outboard motor with tilt stopper after fully tilting up. Leaving outboard motor without locking may lead to accidental descent due to reduction of PTT hydraulic pressure.

2. Remove reserve tank cap ② and check quantity of PTT fluid contained in the tank.

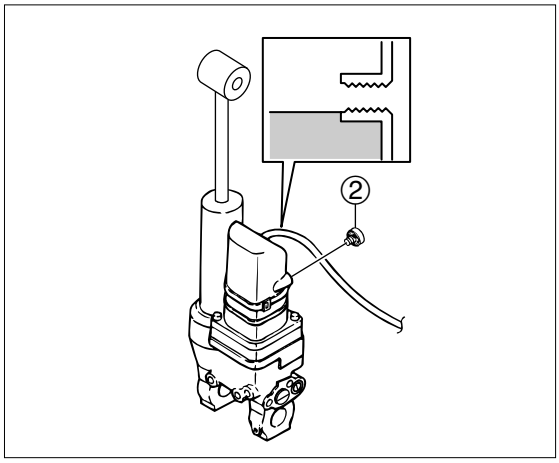

⚠ WARNING

Check PTT fluid level with outboard motor fully tiled up. Removing reserve tank cap at halfway position can cause blasting out of PTT fluid, which is dangerous, and also result in inaccurate fluid level reading.

Quantity of PTT fluid is normal when some fluid spills out of cap hole when cap is removed.

3. Add recommended PTT fluid to specified level if it is lacking.

Recommended PTT Fluid :
ATF DEXRON III

4. Attach reserve tank cap ② and tighten to specified torque.

Reserve Tank Cap :
1.5 N·m (1.1 lb·ft) [0.15 kgf·m]

22) Inspection of Idle Speed

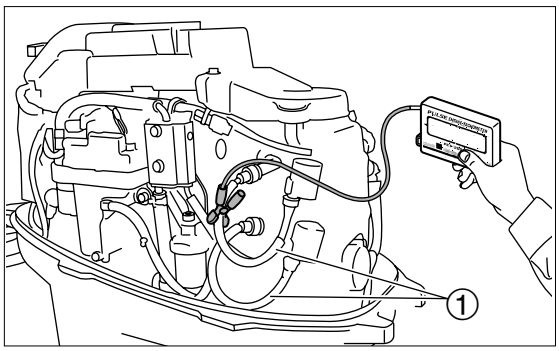

1. Start engine and run for 5 minutes to warm up.

2. Attach tachometer to high tension cord ① to check idle speed.

More accurate and stable reading can be obtained when tachometer lead is connected with high tension cords of individual cylinders linked with each other.

Tachometer :
P/N. 3AC-99010-0

Idle Speed :
850 ± 30 r/min

23) Inspection of Ignition Timing

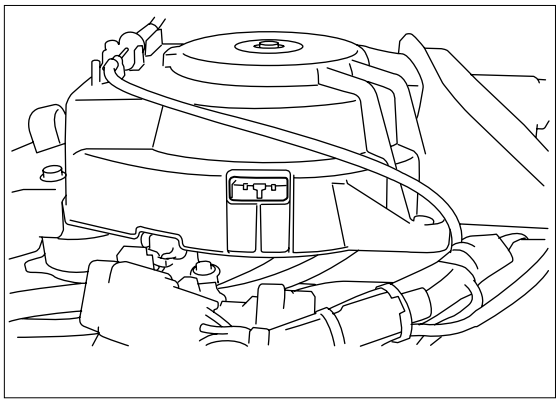

Adjusting system : Automatic control, requiring no manual adjustment.

Run engine and use timing light to check ignition timing.

11 timings marks are found on the side of flywheel (TDC0°, ATDC5°, 10°, BTDC5°, 10°, 15°, 20°, 25°, 30°, 35° and 40°), and ignition timing is read with mark on the center of starter case window.

Outboard Model	Range of Ignition Angle	Engine Starting	Idling	Accelerating
25/30B	TDC 0° to BTDC 38°	BTDC 5°	BTDC 5°±5°	BTDC 38°

24) Inspection of Anodes

1. Check anode ① and trim tab ② for build up of scale and adherence of grease and oil. Clean, or replace if necessary.

   A PTT/Gas Assist Model

   B Mechanical Tilt Model

⚠ CAUTION

Do not coat anode and trim tab with oil, grease or paint, or their anti-corrosion function does not work normally.

When it is necessary to disassemble outboard motor for inspection of anode, refer to disassembly described in this manual.

2. Replace anode ① and/or trim tab ② if they are corroded excessively.

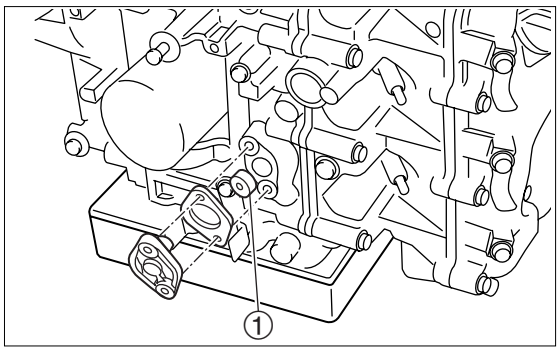

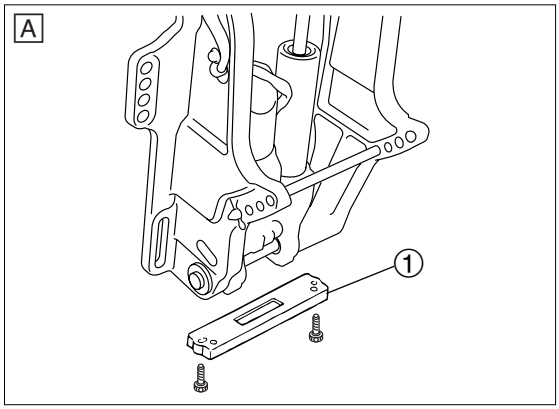

25) Replacement of Anodes

Anode protect outboard motor from galvanic corrosion (corrosion of metal due to very weak electric current).

Anodes are used in the gear case, clamp bracket, and power unit cylinder.

Replace anode if volume is reduced to 2/3 of new part.

- Do not coat anode with oil or paint.
- Since periphery of anode installation bolt is corroded more than other areas, be sure to retighten bolt at every inspection.

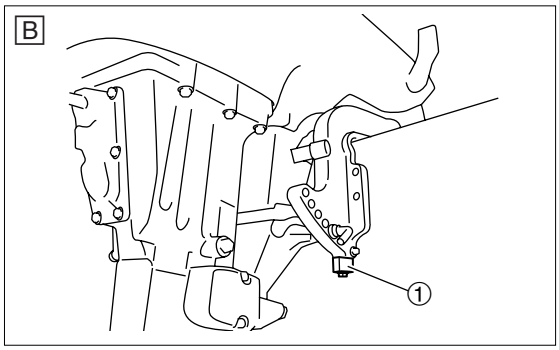

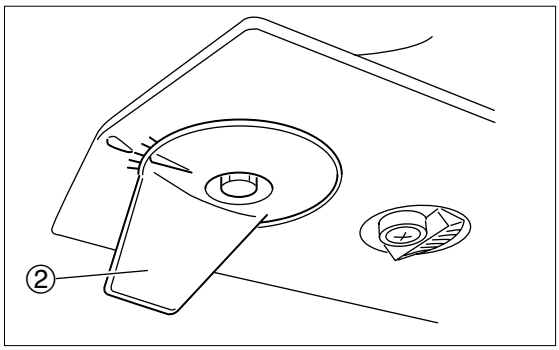

26) Inspection of Propeller

1. Check propeller blades and spline for cracks, damages, wear and corrosion. Replace if necessary.

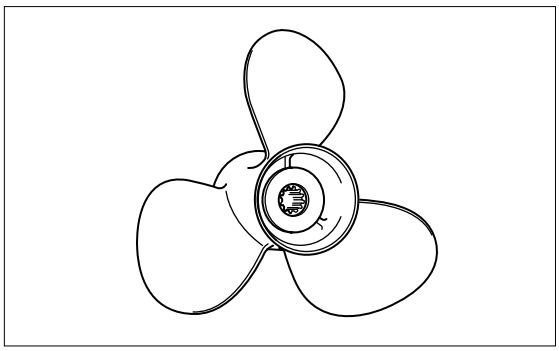

27) Inspection of Thermostat

1. Remove fuel cooler.

2. Remove cover ① and thermostat ②.

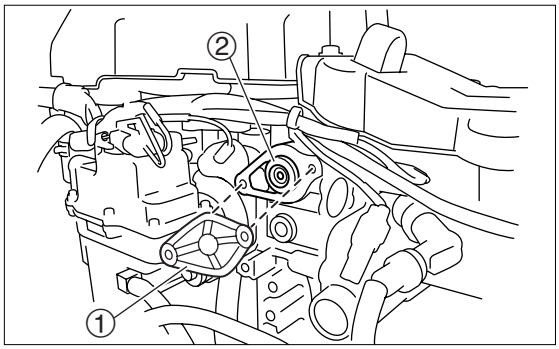

3. Hang thermostat ② in the water contained in vessel.

4. Put thermometer in the water, and warm up water to measure valve opening temperature.

Put a piece of thread in the closed valve gap and hang it in the water. Valve opening moment can be known when thermostat is released to drop due to opening with rise of temperature.

Valve Opening Temperature :
60±1.5° (140±3°F) (Valve starts to open at this temperature.)

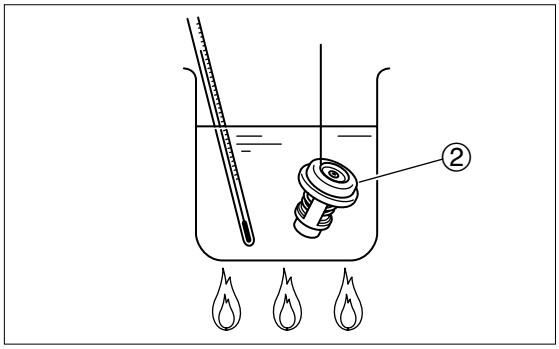

5. Measure valve lift of thermostat when prescribed temperature has been reached. Replace if valve lift is less than specified value.

Water Temperature	Valve Lift ⓐ
75° (167°F)	3.0 mm (0.118 in) or over

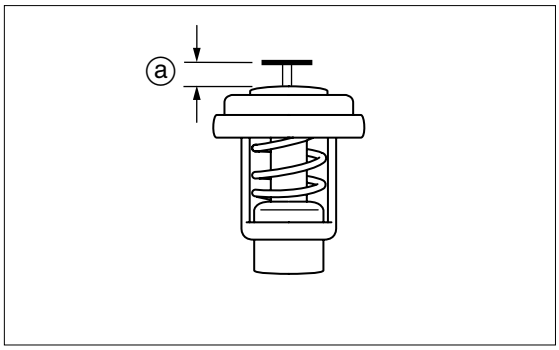

6. Install thermostat, new gasket and cover.

Thermostat Cover Bolt :
6 N·m (4 lb·ft) [0.6 kgf·m]

28) Inspection of Cooling Water Passage

1. Check water strainer ① and sub water strainer ② for clogging. Clean if necessary.

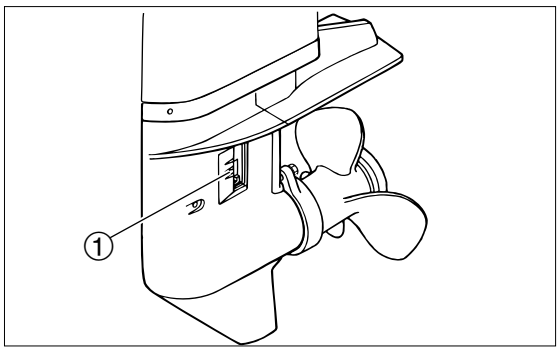

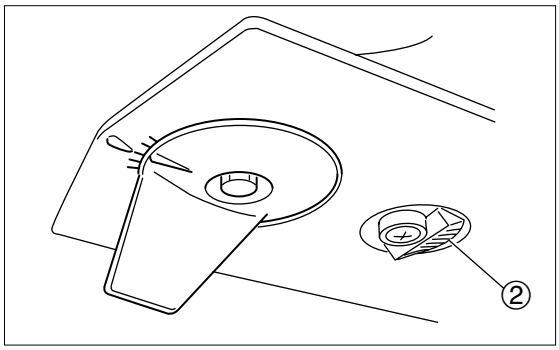

2. Set outboard motor in the water and start engine.

3. Check that cooling water is discharged from cooling water check port ③. If not, check water pump and cooling water passage in the engine.

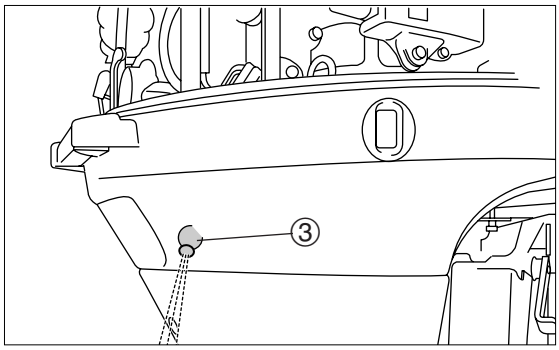

29) Flushing with Water

⚠ CAUTION

Touching rotating propeller could lead to injury. Be sure to remove propeller before running engine on the land.

⚠ WARNING

Exhaust gas contains carbon monoxide, which will cause gas poisoning. Do not start engine with outboard motor placed in a closed area such as boat house.

Flushing with water using drive cleaner ③

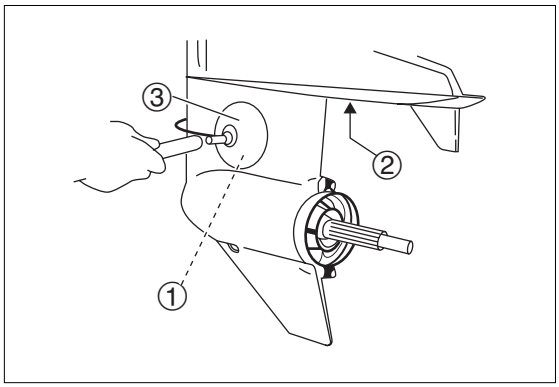

1. Remove propeller and thrust holder.
2. Close sub water strainer ② with tape.
3. Attach driver cleaner ③ to water strainer ① area.
4. Put water hose to driver cleaner ③ and run water.
5. Set gear shift to neutral (N) and start engine.
6. Check that cooling water check port discharges water, and run engine for 3 to 5 minutes at low speed.
7. Stop engine and stop water supply, remove driver cleaner ③, and remove tape, and then, install propeller.

Remove tape after flushing with water.

Flushing with water using flushing attachment ④ (hose adapter)

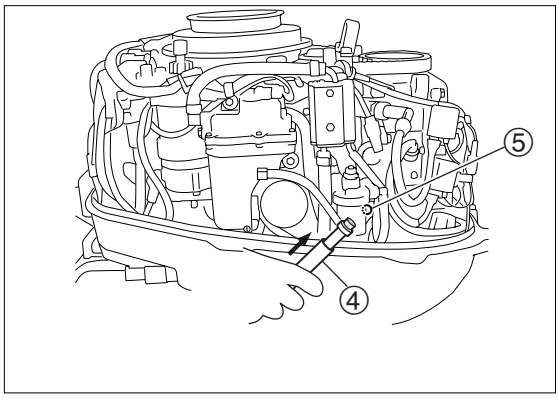

1. Remove propeller and thrust holder.
2. Close water strainer ① and sub water strainer ② with tape.
3. Remove water plug ⑤ of outboard motor, and attach flushing attachment ④.
4. Put water hose on flushing attachment ④ and run water.
5. Set shift lever to neutral (N) and start engine.

6. Check that cooling water check port discharges water, and run engine for 3 to 5 minutes at low speed.

7. Stop engine and stop water supply, remove flushing attachment ④, remove tape, attach and tighten water plug ⑤, and then, install propeller.

Remove tape after flushing with water.

Water Plug :
12 N·m (9 lb·ft) [1.2 kgf·m]

30) Inspection of Battery

1. Inspect electrolyte level. If lower than "LOW" mark ⓐ, add distilled water until the level goes in between "UP" and "LOW" marks.

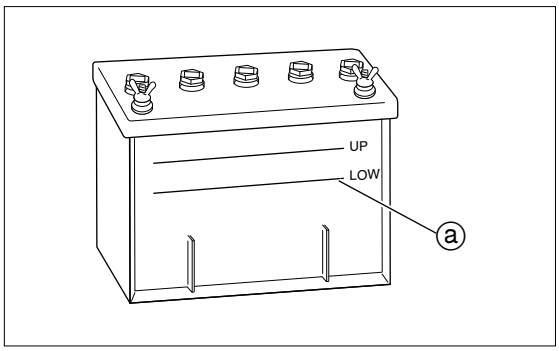

2. Measure specific gravity of electrolyte. Charge battery if specific gravity is less than specified value.

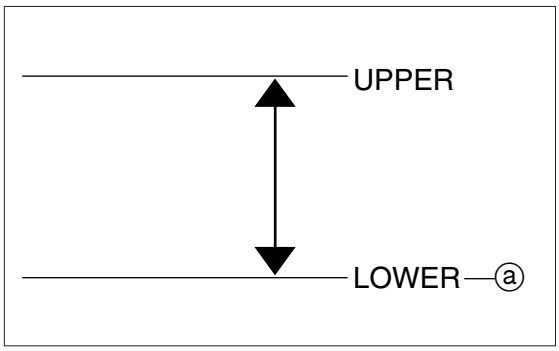

⚠ WARNING

Electrolyte contains sulfuric acid that is poisonous and highly corrosive, which is dangerous. Always be careful of the following matters to prevent accident.
- **Handle electrolyte carefully not to allow adherence to any part of body, or it could cause serious chemical burn or blindness.**
- **Wear protective glasses when working near battery or handling battery.**

First Aid in Emergency (if electrolyte adhered to body)
- **Flush well with fresh water if adhered to skin.**
- **If gets in eye, flush well with fresh water for 15 minutes, and have ophthalmologic evaluation immediately.**

First Aid in Emergency (if swallowed)
- **Drink much water, magnesium hydrate solution (magnesium milk), fresh egg, or salad oil, and have doctor's evaluation immediately.**

Battery produces highly inflammable hydrogen gas. Always be careful of the following matters to prevent accident.
- **Charge battery in well ventilated place.**
- **Keep battery away from fire, sparks or flame. (such as live cigarette or operating welding machine)**
- **Do not allow smoking when handling or charging battery.**

Keep battery and electrolyte out of reach of children.

- Batteries are available with various types, varying among manufacturers. For any unclear matters, refer to manual attached to battery.
- When removing battery, disconnect negative lead first and then positive lead.

Recommended Battery :
12V 70AH (350CCA or 465MCA) to 12V 100AH
(775CCA or 1000MCA at below freezing temperature)

Specific Gravity of Electrolyte :
1.280 (at 20˚)

Charging Requirements : for 12V70AH battery
Charging Current : 70AH x 1/10 = 7A
Charging Hours : 70AH ÷ 7A = 10H

31) Greasing Points

1. Apply grease to throttle cable and sliding areas.

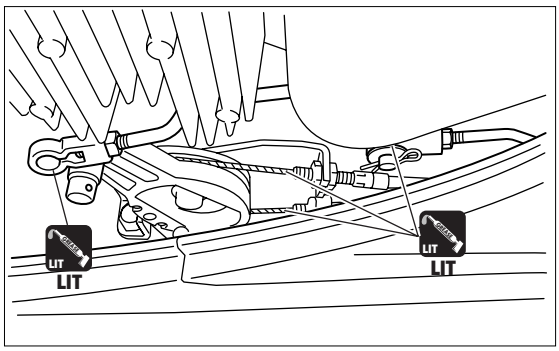

2. Put grease through grease nipples ① until excessive grease appears from bush ⓐ.

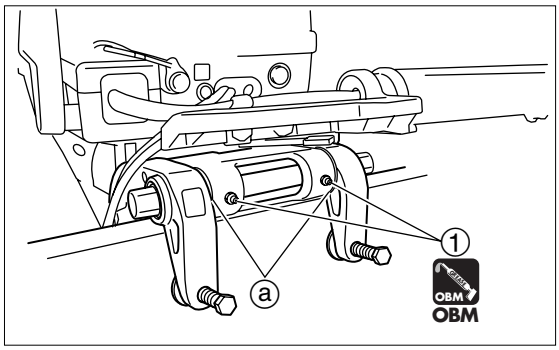

3. Apply grease to throttle cable and sliding areas.

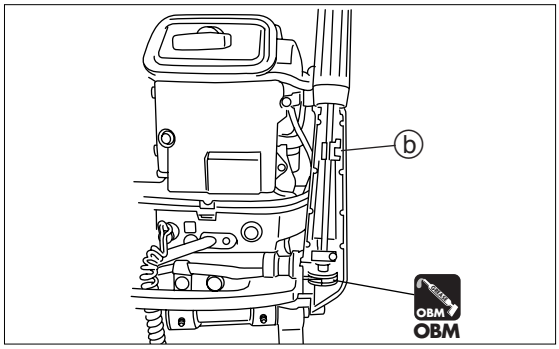

ⓓ Do not lubricate here.

4. Apply thin coat of grease to starter motor pinion.

5. Apply grease to terminals of starter motor, starter solenoid and PTT solenoid.

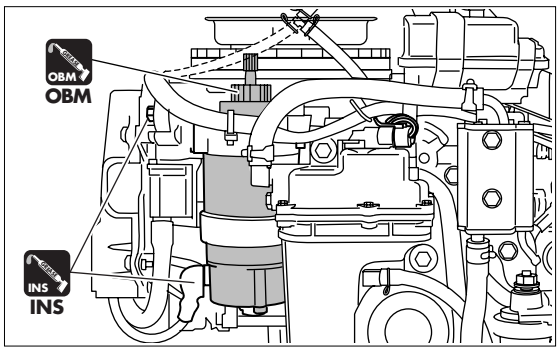

6. Apply grease to propeller shaft spline.

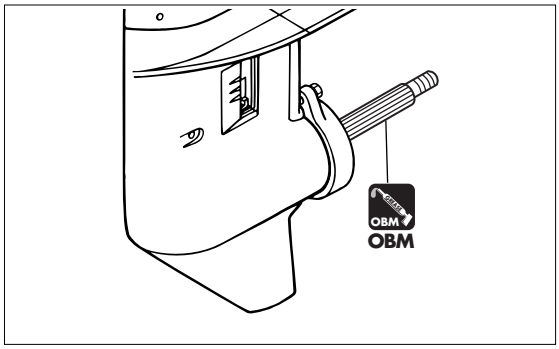

4

Fuel System (Fuel Injection)

1 Special Tools ····· 4-2
2 Piping Arrangement Diagram ····· 4-3
Fuel Hose, Vent Hose, Breather Hose, Cooling Water Hose ··· 4-3
3 Parts Layout ····· 4-4
Fuel Pump, Fuel Rail, Vapor Separator ····· 4-4
Intake Manifold ····· 4-7
Magneto & ECU ····· 4-8
Electric Parts ····· 4-9
Separate Fuel Tank ····· 4-11
4 ECU System ····· 4-12
(1) Configuration of ECU System ····· 4-12
1) Sensors ····· 4-13
2) Actuators ····· 4-15
3) Control System (ECU) ····· 4-16
(2) Control System ····· 4-16
(3) Fuel Injection Control ····· 4-17
1) Fuel Injection Timing ····· 4-17
2) Starting Fuel Increase Correction ····· 4-18
3) Acceleration Fuel Increase Correction ····· 4-18
4) Deceleration Fuel Decrease Correction ··· 4-18
5) Correction Based On Intake Air Temperature ··· 4-18
6) Correction Based On Cylinder Cooling Water Temperature ····· 4-18
(4) Control of Fuel Feed Pump (FFP) ····· 4-18
(5) Control of Tachometer ····· 4-18
(6) Warning Buzzer and Lamp (LED), and Control of Engine Revolution Speed ··· 4-19
1) Locations of warning buzzer and lamp (LED) ··· 4-19
2) Warning notification, abnormality and action to be taken ··· 4-19
5 Ignition System ····· 4-20
(1) Configuration of Ignition System ··· 4-20
(2) Ignition Control ····· 4-21
1) Ignition Timing Controls ····· 4-21
2) Ignition and Combustion Orders ····· 4-21
3) Ignition Timing ····· 4-21
4) Operations ····· 4-21
(3) Fuel Feed System ····· 4-22
6 Components of Fuel Feed System ··· 4-23
1) Fuel Pump (Low Pressure Mechanical Pump) ··· 4-23
2) Vapor Separator ····· 4-23
3) Fuel Regulator ····· 4-24
4) Fuel Cooler ····· 4-24
7 Outline of Fuel Injection System ····· 4-25
1) Air Intake System ····· 4-25
8 Inspection Items ····· 4-26
1) Inspection of Fuel Supply System Piping ··· 4-26
2) Inspection of Filter ····· 4-26
3) Inspection of Fuel Pump ····· 4-28
4) Inspection of Fuel Connector ····· 4-28
5) Measuring fuel pressure ····· 4-29
6) Inspection of Fuel Regulator ····· 4-30
7) Draining Fuel ····· 4-31
8) Disassembly of Vapor Separator ····· 4-31
9) Inspection of Vapor Separator ····· 4-32
10) Reassembly of Vapor Separator ····· 4-33
11) Inspection of ISC (Idle Speed Control) ····· 4-33
12) Inspection of Idle Speed ····· 4-33

1. Special Tools

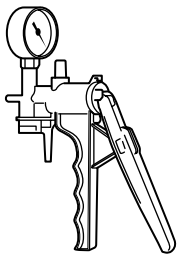	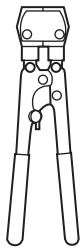	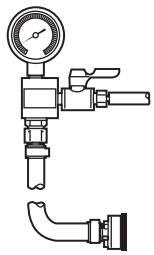
Vacuum/Pressure Gauge P/N. 3AC-99020-0	Clamp Plier P/N. 3T5-72864-0	Pressure Gauge Ass'y P/N. 3T5-72880-0
Inspecting pressure	Caulking clamp	Measuring fuel pressure

2. Piping Arrangement Diagram
Fuel Hose, Vent Hose, Breather Hose, Cooling Water Hose

Rear Section

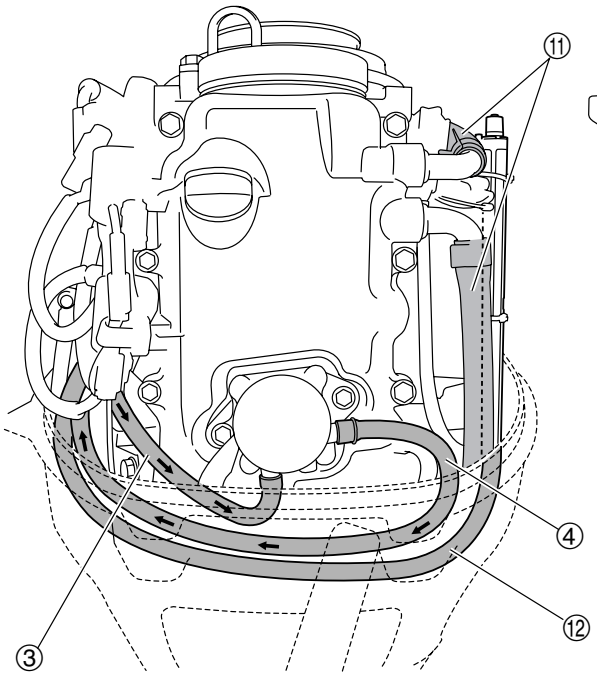

Port Side

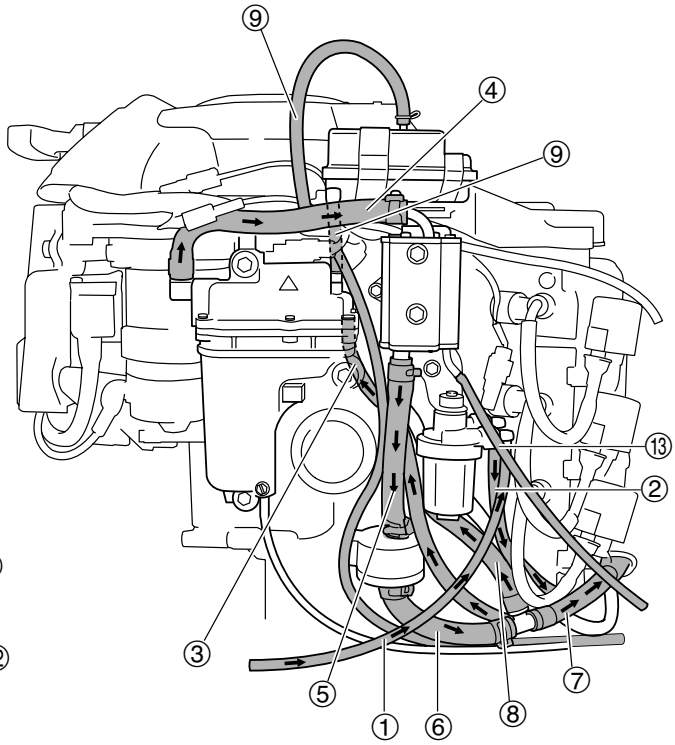

Starboard Side

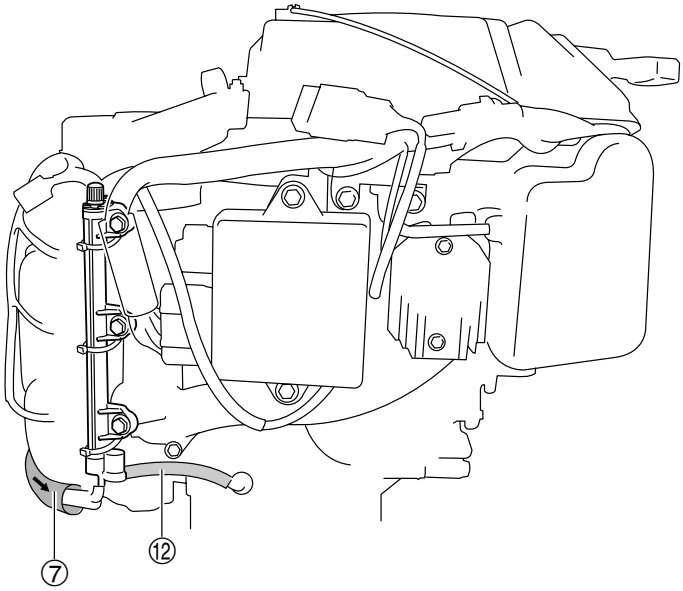

Ref. No..	Description
①	Fuel Hose (Fuel Connector to Fuel Filter)
②	Fuel Hose (Fuel Filter to Fuel Pump)
③	Fuel Hose (Fuel Pump to Vapor Separator)
④	High Pressure Fuel Hose (Vapor Separator to Fuel Cooler)
⑤	High Pressure Fuel Hose (Fuel Cooler to High Pressure Filter)
⑥	High Pressure Fuel Hose (High Pressure Filter to T Nipple)
⑦	High Pressure Fuel Hose (T Nipple to Fuel Rail)
⑧	High Pressure Fuel Hose (T Nipple to Fuel Regulator)
⑨	Vent Hose (Vapor Separator to Orifice to Air Vent)
⑩	Vent Hose (Air Vent to Atmosphere)
⑪	Breather Hose (Engine Base to Cylinder Head to Throttle Body)
⑫	Cooling Water Hose (Cylinder Block to Fuel Cooler)
⑬	Cooling Water Hose (Fuel Cooler to Cooling Water Check Port)

3. Parts Layout

P/L Fig. 5

Fuel Pump, Fuel Rail, Vapor Separator

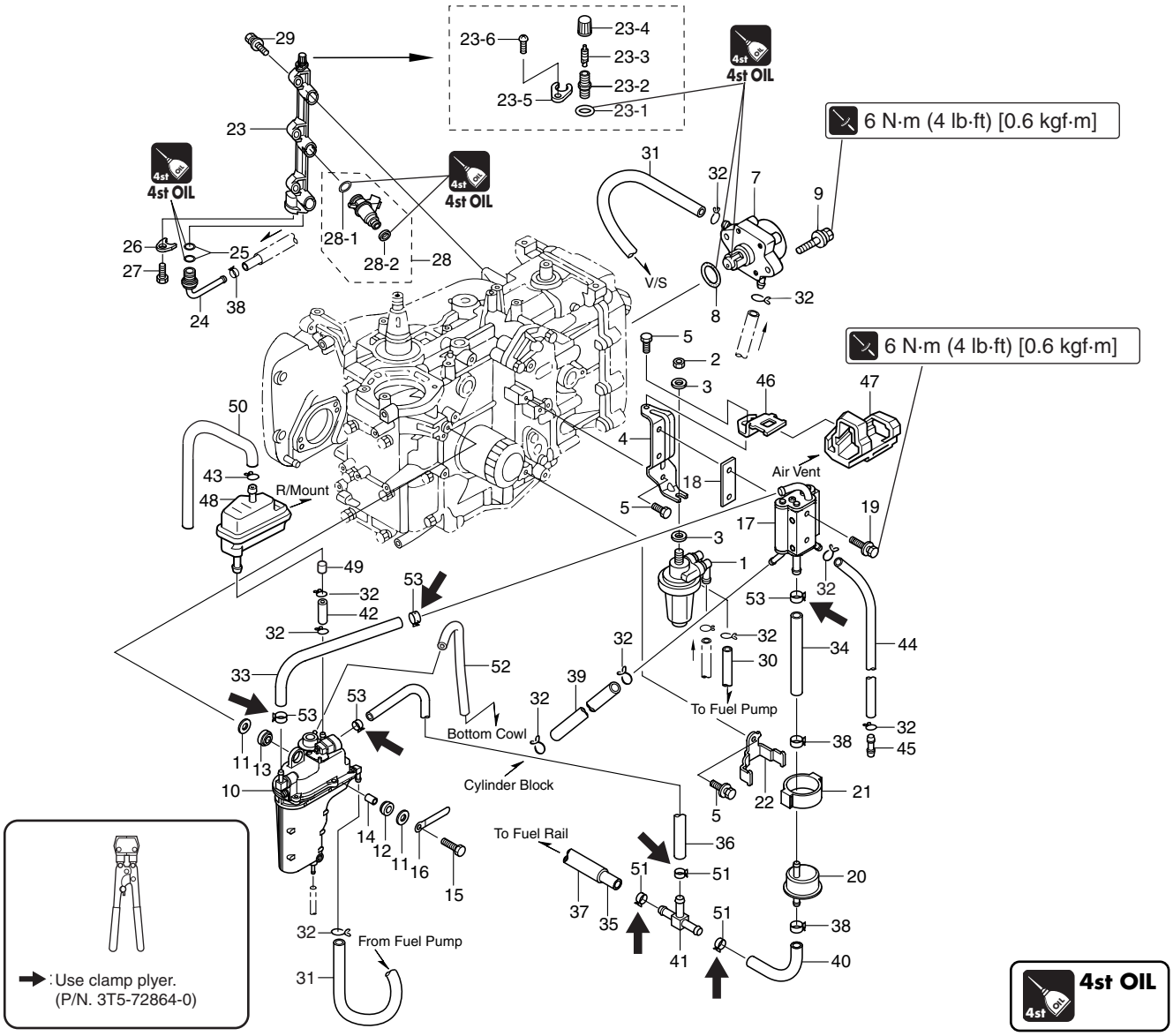

Ref. No.	Description	Q'ty	Remarks
1	Fuel Filter	1	
2	Nut	1	
3	Washer	2	
4	Plate	1	
5	Bolt	3	M6 L=16mm
7	Fuel Pump	1	
8	O Ring, 3.5-25.7	1	Do not reuse.
9	Bolt	2	M6 L=25mm
10	Vapor Separator	1	
11	Washer, 6.5-21-1	6	
12	Rubber Mount, 8.5-14-2.5	3	
13	Rubber Mount, 8.5-14-2.5	3	
14	Spacer, 6.2-9-15.7	3	
15	Bolt	3	M6 L=30mm
16	Clamp, 6.5-87P	1	
17	Fuel Cooler	1	
18	Fuel Cooler Gasket	1	
19	Bolt	2	M6 L=35mm
20	High Pressure Fuel Filter	1	Replace every 200 hours or two years.
21	Fuel Filter Rubber Mount	1	
22	Fuel Filter Band	1	
23	Fuel Rail	1	
23-1	O Ring, 1.9-4.8	1	Do not reuse.
23-2	Joint	1	

Ref. No.	Description	Q'ty	Remarks
23-3	Valve Ass'y	1	
23-4	Cap	1	
23-5	Plate	1	
23-6	Screw	1	M4 L=10mm
24	Nipple	1	
25	O Ring, 1.9-9.8	2	Do not reuse.
26	Holding Plate	1	
27	Bolt	1	M6 L=16mm
28	Fuel Injector	3	
28-1	O Ring, 3.6-6.5	3	Do not reuse.
28-2	O Ring	3	Do not reuse.
29	Bolt	3	M6 L=25mm
30	Rubber Hose, L=370	1	F/Filter to F/Pump
31	Rubber Hose, L=600	1	F/Pump to Vapor Separator
32	Clip, ø10	10	
33	Fuel Hose	1	Vapor Separator to F/Cooler
34	Fuel Hose	1	F/Cooler to High Pressure F/Filter
35	Fuel Hose	1	T Nipple to Fuel Rail
36	Fuel Hose	1	Vapor Separator to T Nipple
37	Hose Protector	1	L=240
38	Clip, ø13.5	3	
39	Rubber Hose	1	Cylinder to F/Cooler
40	Fuel Hose, L=600	1	High Pressure F/Filter to T Nipple
41	T Nipple	1	

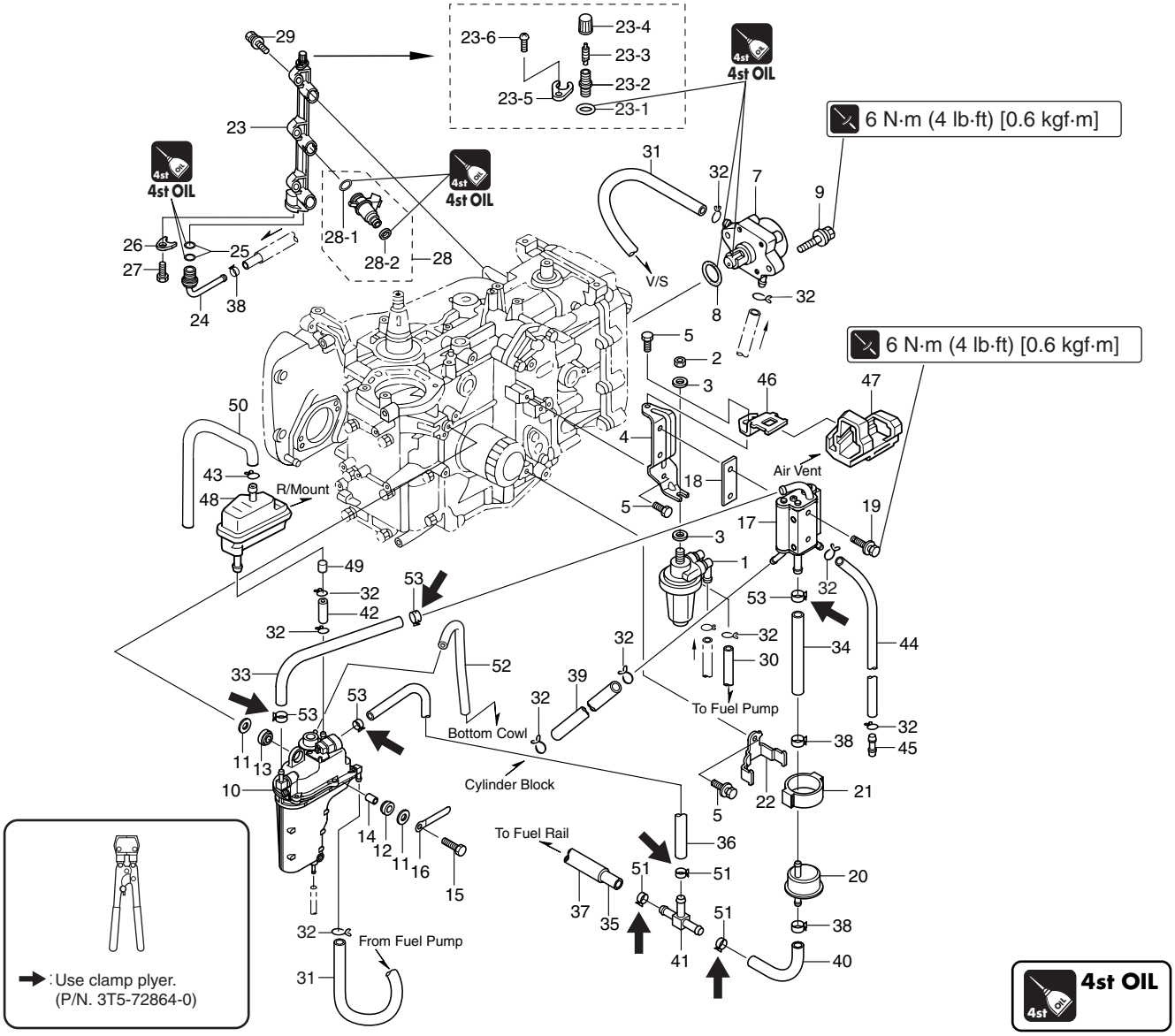

Ref. No.	Description	Q'ty	Remarks
42	Rubber Hose	1	Air Vent to Vapor Separator
43	Clip, ø7	5	
44	Rubber Hose, L=600	1	Fuel Cooler to Water Nipple (Cooling Water Check Port)+
45	Water Nipple	1	Bottom Cowl
46	Air Vent Stay	1	
47	Rubber Mount (Air Vent)	1	
48	Air Vent Ass'y	1	
49	Orifice	1	
50	Rubber Hose	1	Air Vent to Bottom Cowl
51	Clamp	3	
52	Rubber Hose, LL=540	1	Vapor Separator to Bottom Cowl
53	Clamp, 16.8	4	**Do not reuse.**

Fuel Pump, Fuel Rail, Vapor Separator

P/L Fig. 5

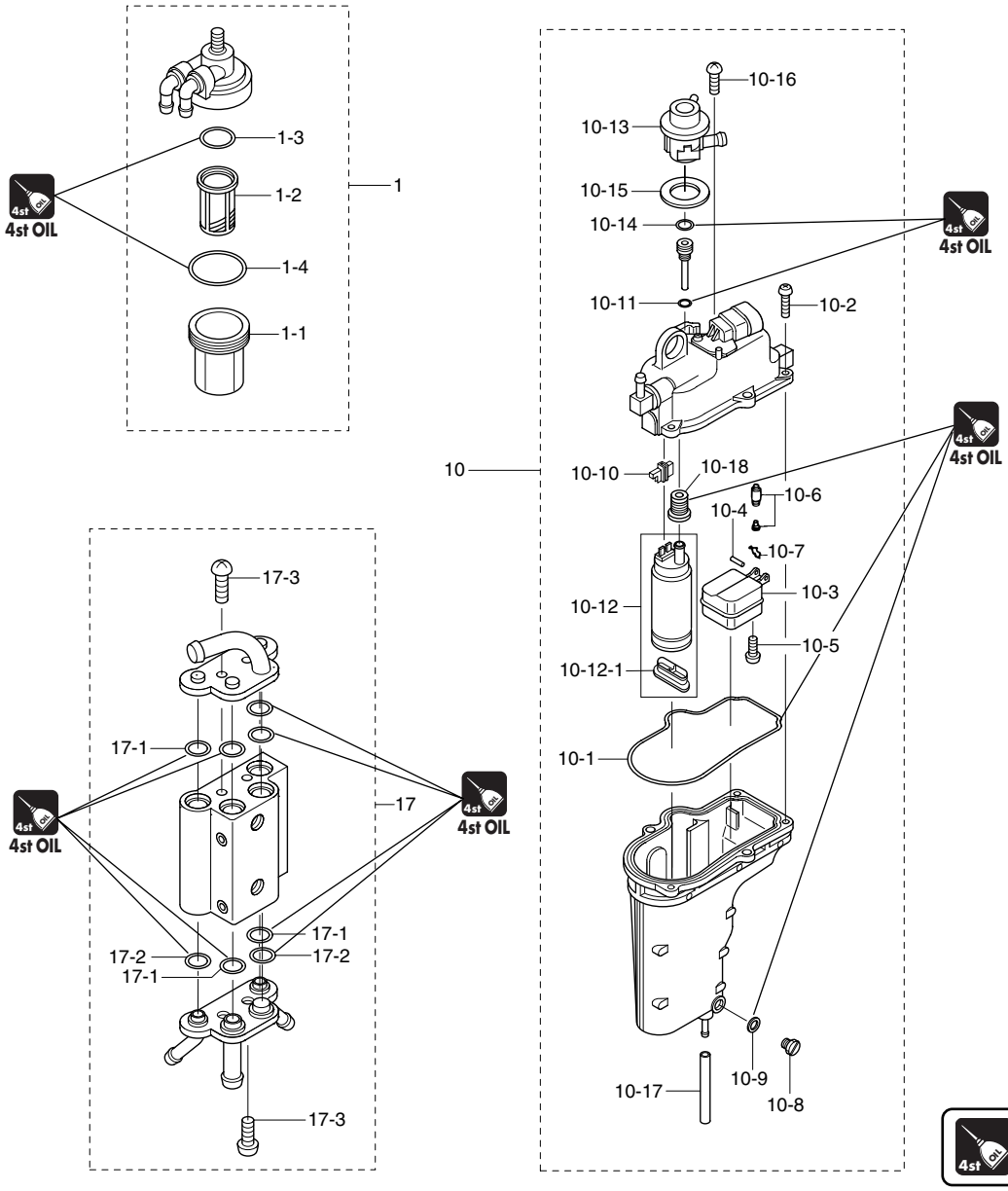

Ref. No.	Description	Q'ty	Remarks
1	Fuel Filter	1	
1-1	Cup	1	
1-2	Filter	1	
1-3	O Ring	1	Do not reuse.
1-4	O Ring A	1	Do not reuse.
10	Vapor Separator	1	
10-1	O Ring	1	Do not reuse.
10-2	Screw	5	M4 L=16mm
10-3	Float	1	
10-4	Float Arm Pin	1	
10-5	Screw	1	M4 L=8mm
10-6	Float Valve	1	with Needle Valve
10-7	Clip	1	
10-8	Drain Screw	1	
10-9	Drain Screw O Ring	1	Do not reuse.
10-10	Terminal Holder	1	
10-11	O Ring	1	Do not reuse.
10-12	Fuel Feed Pump	1	
10-12-1	Filter	1	
10-13	Fuel Regulator	1	
10-14	O Ring	1	Do not reuse.
10-15	Grommet	1	
10-16	Screw	2	
10-17	Rubber Hose	1	for draining

Ref. No.	Description	Q'ty	Remarks
10-18	Grommet	1	
17	Fuel Cooler	1	
17-1	O Ring, 1.9-7.8	6	Do not reuse.
17-2	O Ring, 1.9-6.8	2	Do not reuse.
17-3	Screw	4	M4 L=10mm

4st OIL

Intake Manifold

P/L Fig. 4

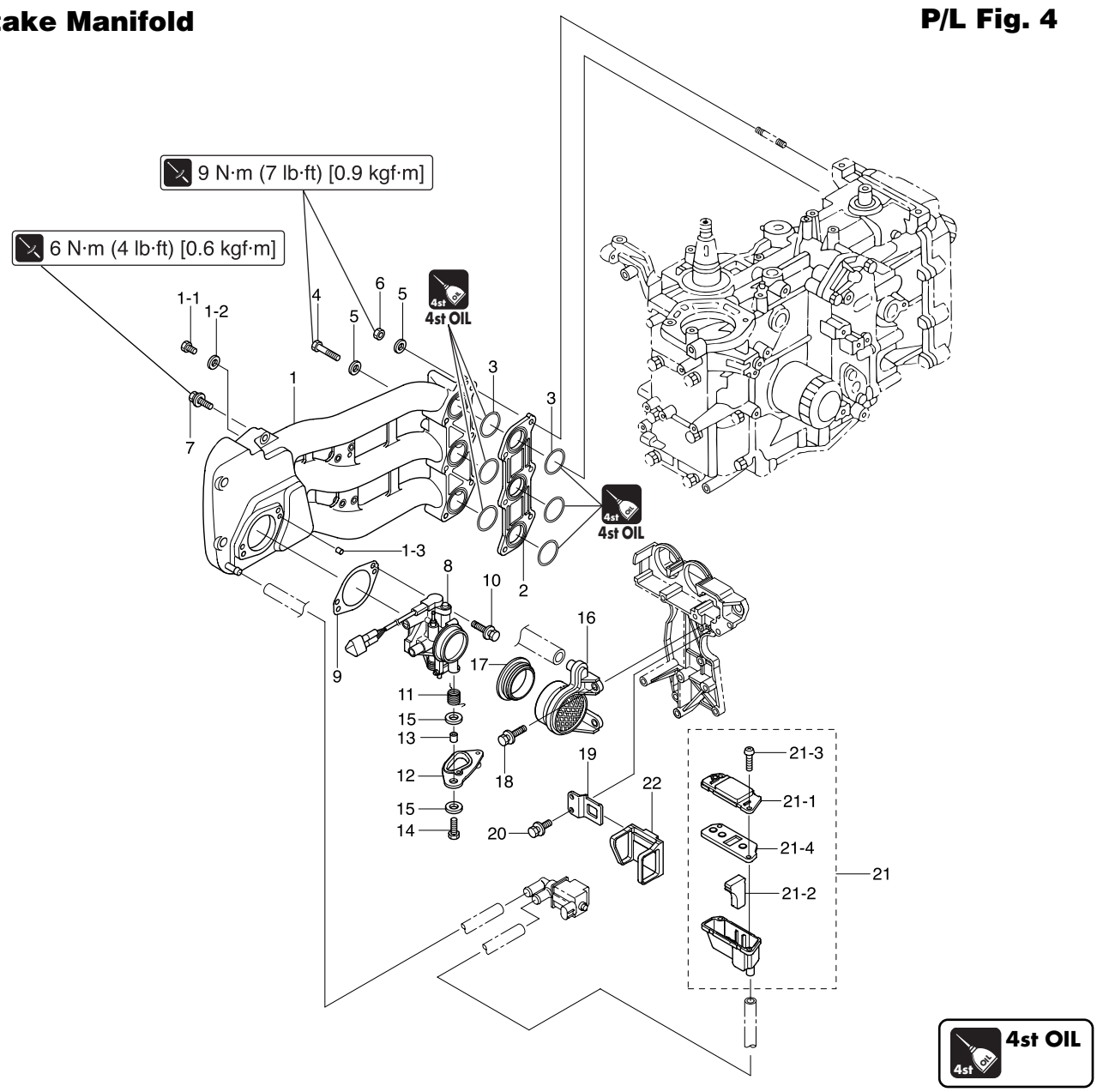

Ref. No.	Description	Q'ty	Remarks
1	Intake Manifold	1	
1-1	Bolt, 5-10	1	
1-2	Washer, 5.3-12-1	1	
1-3	Dowel Pin, 6-12	2	
2	Insulator	1	
3	O Ring, 1.9-31.2	6	Do not reuse.
4	Bolt	3	M6 L=35mm
5	Washer	6	
6	Nut	3	
7	Bolt	3	M6 L=25mm
8	Throttle Body Ass'y	1	30PS, with TPS
	Throttle Body Ass'y	1	25PS, with TPS
9	Throttle Body Gasket	1	Do not reuse.
10	Bolt	2	M6 L=25mm
11	Spring	1	
12	Throttle Cam	1	30PS (Black)
	Throttle Cam	1	25PS (White)
13	Collar, 6.2-9-9.3	1	
14	Bolt	1	M6 L=25mm
15	Washer, 6.5-21-1	2	
16	Intake Silencer Ass'y	1	for Throttle Body
17	Gasket	1	
18	Bolt	2	M6 L=20mm
19	Stay	1	

Ref. No.	Description	Q'ty	Remarks
20	Bolt	2	M6 L=12mm
21	Intake Silencer Ass'y	1	for ISC Valve
21-1	Intake Silencer Cover	1	
21-2	Air Filter	1	
21-3	Tapping Screw, 5-16	2	
21-4	Intake Silencer Gasket	1	Do not reuse.
22	Grommet	1	

Magneto & ECU

P/L Fig. 8

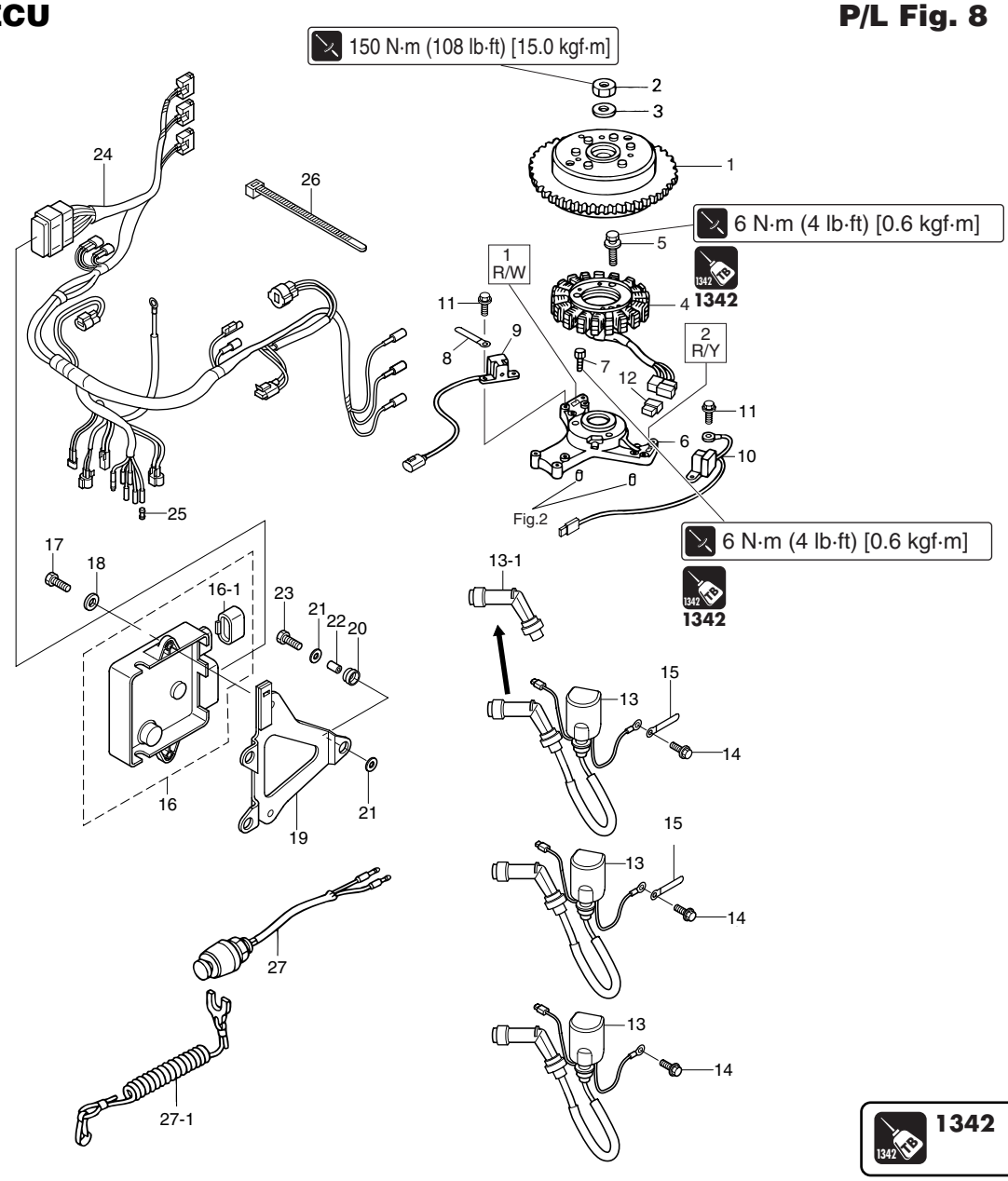

Ref. No.	Description	Q'ty	Remarks
1	Flywheel Cup	1	with FF 90 Ring Gear
2	Nut, M18-P1.5	1	
3	Washer, 19-34-3	1	
4	Alternator	1	
5	Bolt	3	M6 L=25mm
6	Coil Bracket	1	
7	Bolt	3	M6 L=30mm
8	Clamp, 6.5-47.5P	1	
9	Pulser Coil # 1	1	
10	Pulser Coil # 2	1	
11	Bolt	4	M5 L=12mm
12	Plug (Alternator Coupler)	1	Recoil Start Model
13	Ignition Coil	3	
13-1	Plug Cap (Resistance)	3	
14	Bolt	3	M6 L=20mm
15	Clamp, 6.5-47.5P	2	
16	ECU, 30	1	
	ECU, 30	1	for EU
	ECU, 25	1	
	ECU, 25	1	for EU
16-1	Plug (ECU)	1	
17	Bolt	2	M6 L=16mm
18	Washer, 6-16-1.5	2	
19	ECU Bracket	1	

※ Tiller Handle Model

Ref. No.	Description	Q'ty	Remarks
20	Rubber Mount	3	
21	Washer	6	
22	Collar, 6.2-9-7.4	3	
23	Bolt	3	M6 L=20mm
24	ECU Cord	1	※
	ECU Cord	1	▲
25	Cable Terminal Plug	3	※
26	Lead Wire Band, L=150	4	
27	Stop Watch	1	
27-1	Stop Switch Lanyard	1	

▲ Remote Control Model

Electric Parts

P/L Fig. 9

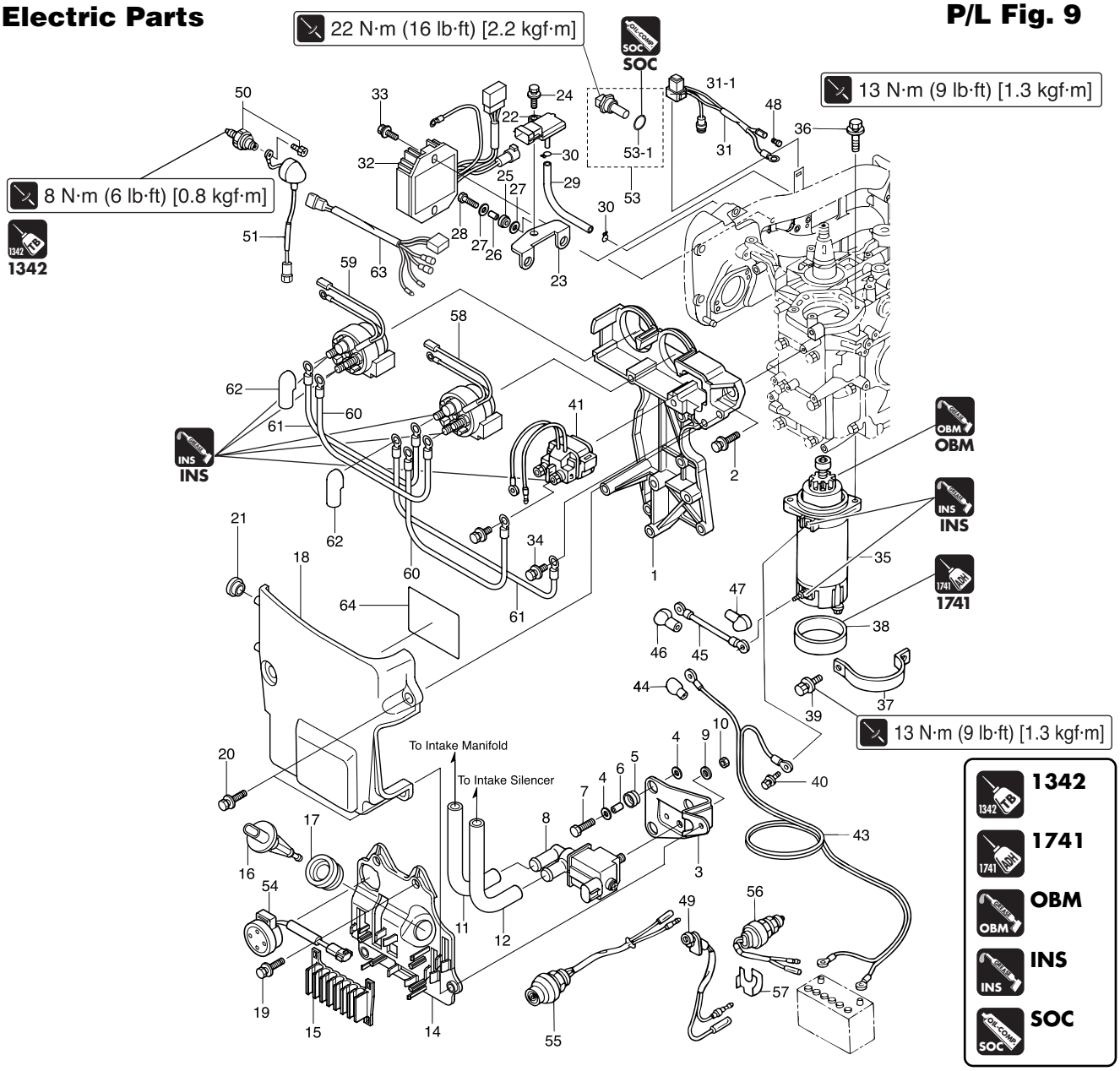

Ref. No.	Description	Q'ty	Remarks
1	Electric Bracket	1	
2	Bolt	5	M6 L=25mm
3	Plate	1	
4	Washer, 6-16-1.5	6	
5	Rubber Mount	3	
6	Collar, 6.2-9-7.4	3	
7	Bolt	3	M6 L=20mm
8	ISC Valve	1	
9	Washer	1	
10	Nut	1	
11	Fuel Hose	1	ISC Valve to Intake Manifold
12	Fuel Hose	1	Intake Silencer to ISC Valve
14	Cord Holder	1	
15	Holder	1	
16	Mat Sensor	1	
17	Mat Sensor Grommet	1	
18	Electric Bracket Cover	1	
19	Bolt	3	M6 L=25mm
20	Bolt	2	M6 L=20mm
21	Grommet, 17-2.7	1	
22	Map Sensor	1	
23	Map Sensor Plate	1	
24	Bolt	1	M6 L=16mm
25	Rubber Mount	2	

Ref. No.	Description	Q'ty	Remarks
26	Collar, 6.2-9-7.4	2	
27	Washer, 6-16-1.5	4	
28	Bolt	2	M6 L=20mm
29	Hose, L=110	1	Map Sensor to I/Manifold
30	Clip, ø7	2	
31	Fuse Cable	1	※
31-1	Fuse (20A)	2	※
32	Rectifier	1	※
33	Bolt	2	※ M6 L=25mm
34	Bolt	1	※ M6 L=12mm
35	Starter Motor	1	※
36	Bolt	2	※ M8 L=30mm
37	Starter Motor Bank	1	※
38	Starter Motor Damper	1	※
39	Bolt	2	※ M8 L=20mm
40	Bolt	1	※ M6 L=12mm
41	Starter Solenoid	1	※ with two Bolts
43	Battery Cable	1	※ L=2500
44	Terminal Cap	1	※
45	Starter Cable	1	※ L=270
46	Terminal Cap	1	※ Starter Solenoid (Red)
47	Terminal Cap	1	※ Starter Motor (Red)
48	Cable Terminal Plug	1	※
49	Warning Lamp	1	

※ Electric Start Model

Electric Parts

P/L Fig. 9

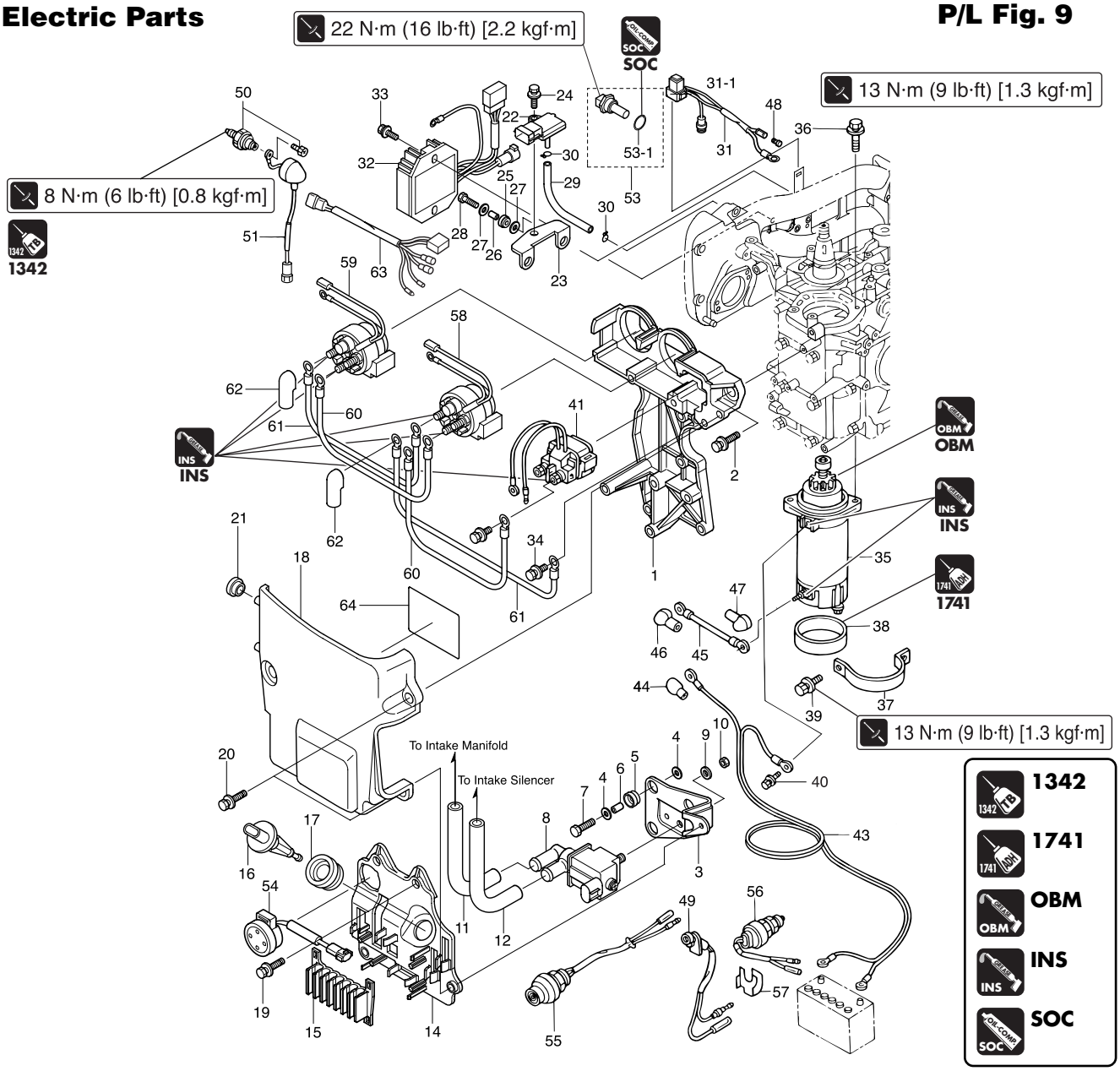

Ref. No.	Description	Q'ty	Remarks
50	Oil Pressure Switch	1	
51	Pressure Switch Lead Cable	1	L=170, with Grommet
53	Water Temperature Sensor	1	
53-1	O Ring, 2-10	1	**Do not reuse.**
54	Over-Heat Buzzer	1	●
55	Main Switch	1	▲
56	Neutral Swtich	1	▲
57	Neutral Switch Actuator	1	▲
58	PTT Solenoid Switch A	1	■ for tilt up
59	PTT Solenoid Switch B	1	■ for tilt down
60	Solenoid Switch cord "B"	2	■ L=150, Red (+)
61	Solenoid Switch cord "B"	2	■ L=130, Black (−)
62	Terminal Cap	2	■
63	PTT Extension Cord	1	■
64	Wiring Diagram Decal	1	

● Tiller Handle Model
▲ Electric Start Model with Tiller Handle
■ PTT Model

Separate Fuel Tank

P/L Fig. 24

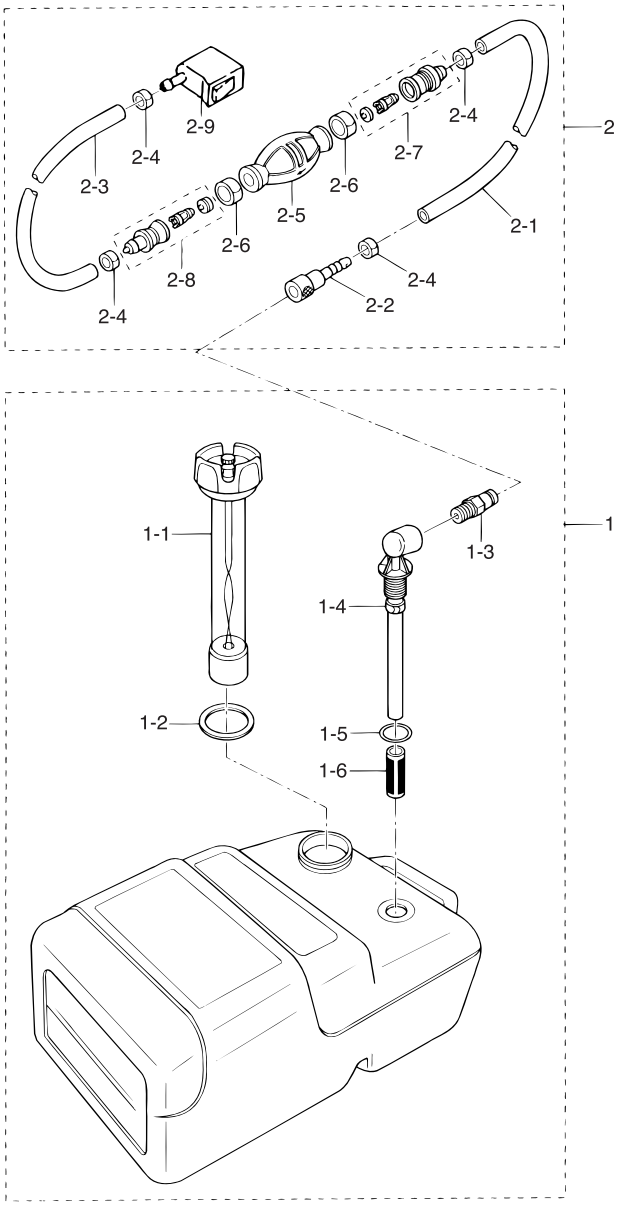

Ref. No.	Description	Q'ty	Remarks
1	Fuel Tank ((25L, Plastic)	1	
1-1	Fuel Gauge Vented Cap	1	
1-2	Tank Cap Gasket	1	
1-3	Male Quick Connector	1	
1-4	Fuel Pick Up Elbow	1	
1-5	O Ring	1	**Do not reuse.**
1-6	Filter	1	
2	Primer Valve Ass'y	1	
2-1	Rubber Hose	1	
2-2	Fuel Connector (Tank Side, Female)	1	
2-3	Rubber Hose	1	
2-4	Clamp	4	
2-5	Primer Bulb	1	
2-6	Clamp	2	
2-7	Joint Ass'y IN	1	
2-8	Joint Ass'y OUT	1	
2-9	Fuel Connector (Engine Side, Female)	1	

4. ECU System

(1) Configuration of ECU System

ECU uses various sensors to precisely control injected fuel amount and ignition timing.

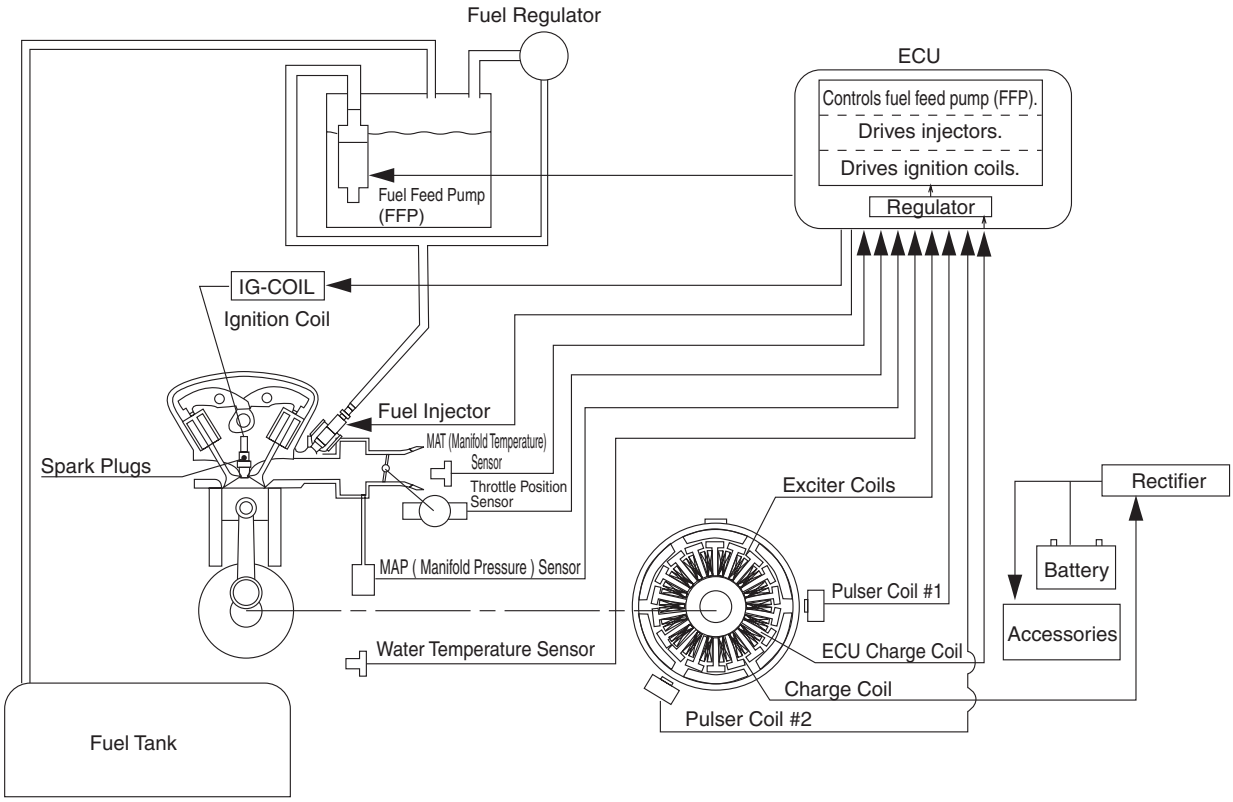

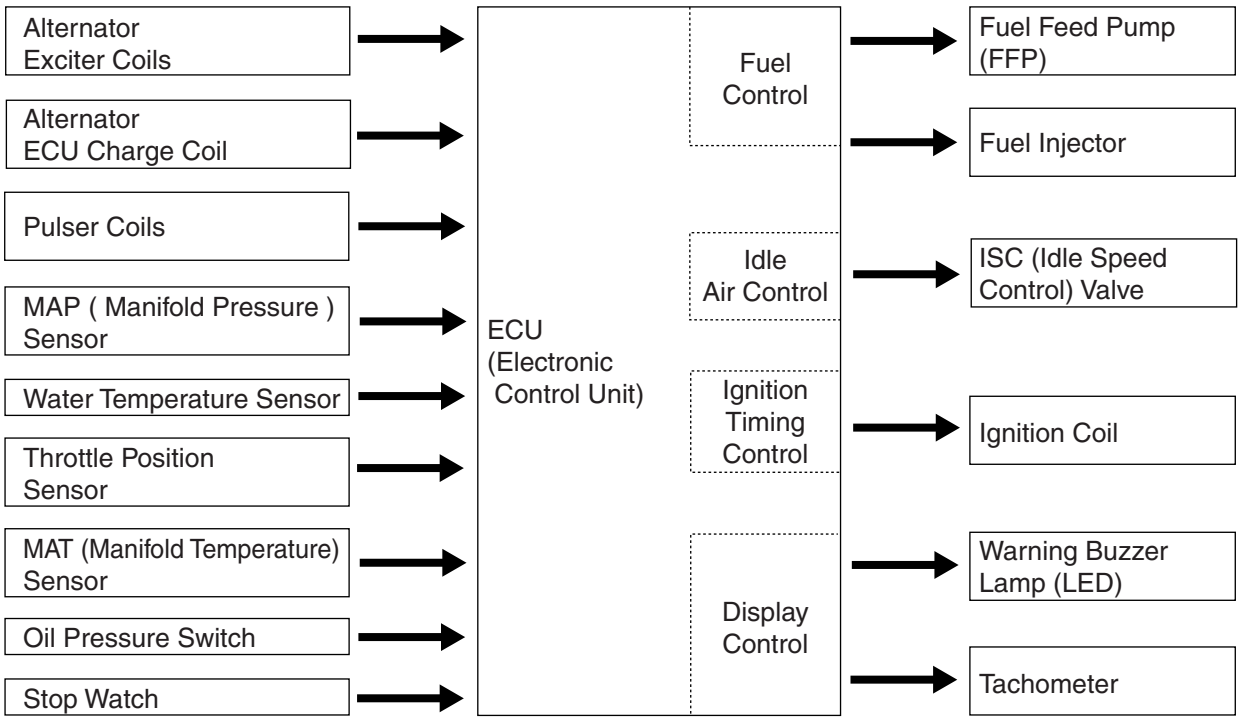

1) Sensors

Individual sensors detect engine operating conditions and sends signals regarding the information to ECU.

1. Pulser Coil [Crank Position Sensor]

   Pulser coils function as crank position sensors. As flywheel rotates, two pulser coils detects crank position in 120 degree range of flywheel and sends the position signals to ECU.

   ECU uses this signal to establish fuel injection amount and ignition timing.

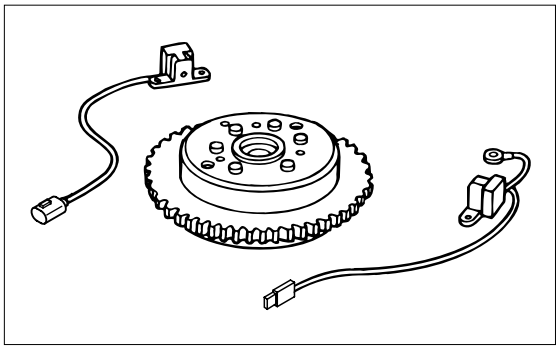

2. MAP (Manifold Pressure) Sensor

   MAP sensor is located on the upper area of intake manifold to detect intake manifold inner pressure (intake vacuum pressure) and send the signal to ECU.

   ECU uses this signal to establish fuel injection amount and ignition timing.

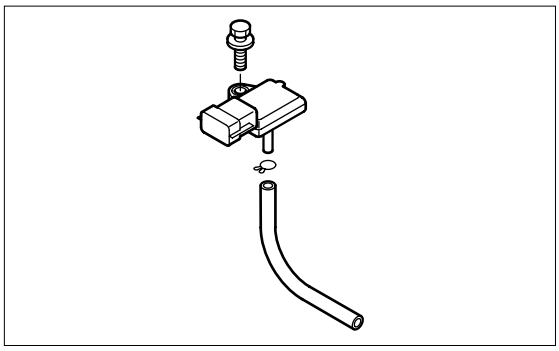

3. Water Temperature Sensor

   Water temperature sensor is located on the upper area of cylinder block and project into cooling water passage. The sensor detects temperature of cooling water of which flow through engine is controlled with thermostat and sends the signal to ECU.

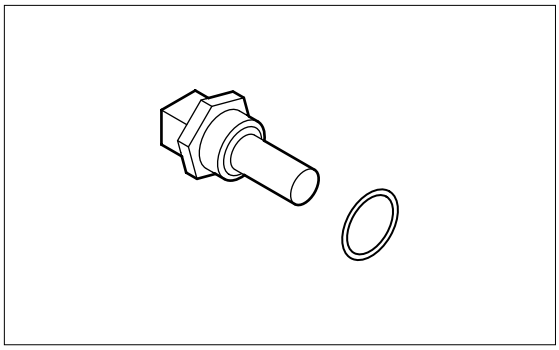

4. MAT (Manifold Temperature) Sensor

   MAT sensor is located on the front side of throttle valve to detect intake air temperature and send the signal to ECU.

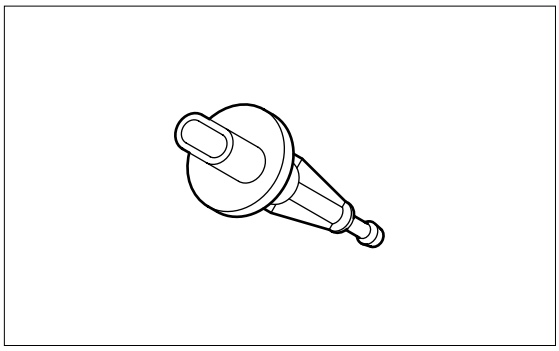

5. Throttle Position Sensor (TPS)

Throttle position sensor is located on the top of throttle body, and is connected to throttle shaft. Throttle position sensor sends throttle open/close information to ECU.

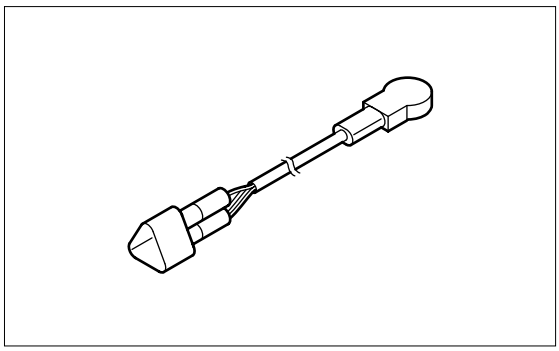

6. Oil Pressure Switch

Oil pressure switch is located on the port side of ending, and is projected into oil passage to which pressure between crank shaft and cam shaft from oil pump is applied. Oil pressure switch sends oil pressure low signal to ECU.

ECU operates low speed ESG, warning buzzer and lamp based on this information.

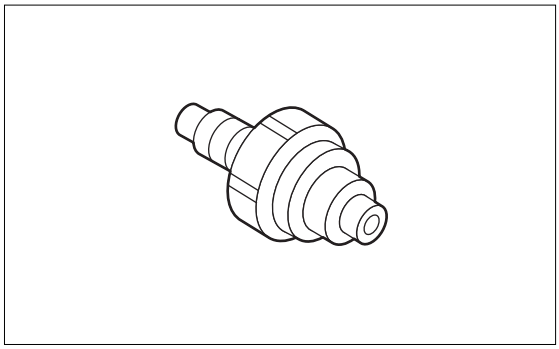

2) Actuators

Actuator section receives signals from ECU to control air/fuel ratio, ignition timing and idle revolution speed.

1. ISC (Idle Speed Control) Valve

   ISC is also referred to as IAC (Idle Air Control). ISC valve is an electrical solenoid valve with built-in spring, and controls amount intake air that bypasses closed throttle valve. Signal from ECU controls ratio of operating period in which ISC valve is open or closed. Operating period ratio of ISC valve varies between 0% to 100% to control the following three functions.

   1. To increase idle revolution speed during engine warm-up by adding intake air amount at engine starting.
   2. To control idle revolution speed according to varying engine load and operating conditions.
   3. To prevent engine from stalling by adding intake air amount (bypass), functioning as dash pot, when throttle is closed quickly for rapid decelleration.

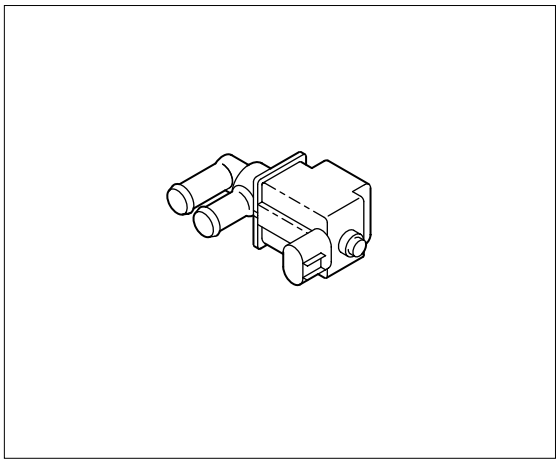

2. Fuel Injector

   Fuel injector is an electrical solenoid valve with built-in spring, and feeds fuel into intake manifold passage. It injects high pressure fuel when engine starts, electricity is supplied from ECU charge coil into injector, and then ECU closes earth circuit to lift solenoid. Fuel injector closes to stop its operation when ECU opens earth circuit.

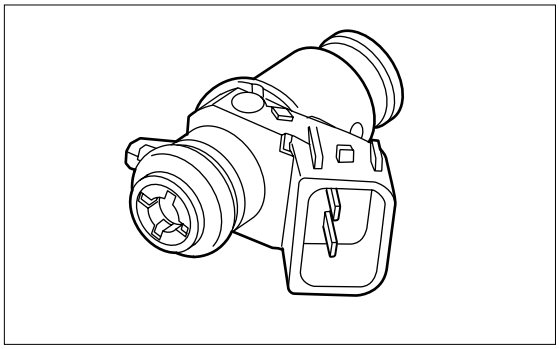

3. Fuel Feed Pump (FFP)

   Refer to description of vapor separator in Chapter 4.

4. Ignition Coil

   Refer to Chapter 4.

5. Warning Buzzer and Lamp (LED)

   Refer to Chapter 4.

6. Tachometer

   Refer to Chapter 4.

3) Control System (ECU)

ECU requires 5VDC for operaiton. Accidental malfunction of ECU stops engine.

ECU provides the following functions.

1. Calculates the most suitable fuel injection amount and ignition timing based on engine revolution speed, throttle position, intake vacuum, intake air temperature and engine cooling water temperature.
2. Controls fuel injectors, ignition coils and ISC (Idle Speed Control) valve.
3. Controls warning buzzer and lamp (LED).
4. Control engine low speed ESG function.
5. Control engine high speed ESG function.
6. Memorizes engine operation information.

Operations of engine can be monitored and malfunction diagnosis can be made by using a personal computer installed with 3AC DIAGNOSIS (software) and diagnosis harness.

(2) Control System

ECU (Electronic Control Unit) is installed on the intake manifold through rubber mount. Data received from sensors such as pulser coil, MAP (Manifold Pressure) sensor and water temperature sensor are processed with computer to drive actuators (fuel injector, ISC valves, etc.) corresponding to current operating conditions to control fuel injection amount and ignition timing.

Principal control items are as follows.

Control Item	Description
Ignition Timing	Sets the most suitable ignition timing according to current operating conditions.
Fuel Injection Amount	Sets the most suitable fuel injection amount according to current operating conditions.
ISC (Idle Speed Control)	Stabilizes engine revolution speed during idling or low speed running by driving ISC valve to control air flow in bypass passage.
Fuel Feed Pump	Controls driving of fuel feed pump (FFP).
Tachometer	Outputs tachometer driving pulses. Number of pulses per one revolution of crankshaft : 6 pulses (12 poles)
Warning Buzzer	Makes buzzer sound when an abnormality is detected. • Short period beep : For 2 seconds after starting engine to notify of normal system operation, meaning no problem. • Continuous sound : When engine high speed ESG is "ON". When engine cooling water temperature is abnormally high (over 90°) When engine oil pressure is abnormally low. • Intermittent sound : When water temperature sensor or MAP (Manifold Pressure) sensor is defective or sensor circuit is disconnected.
Warning Lamp (LED) (Tachometer warning lamp synchronizes and ignitions are made.)	Makes the lamp light or blink when an abnormality is detected. • Short period lighting : For 5 seconds after starting engine to notify of normal system operation, meaning no problem. • Continuous lighting : When engine high speed ESG is "ON". When engine cooling water temperature is abnormally high (over 90°) When engine oil pressure is abnormally low. • Intermittent lighting : When water temperature sensor or MAP (Manifold Pressure) sensor is defective or sensor circuit is disconnected.
Memorizing operational data	Manages the following engine operation information. • Engine operating hours • Maximum water temperature record (Maximum water temperature and time of occurrence) • Engine high speed ESG operation record • Engine low speed ESG operation record • Malfunction records

(3) Fuel Injection Control

ECU calculates intake air amount based on engine revolution speed and intake manifold pressure (intake vacuum pressure) to determine fuel injection amount.

At engine starting, during warm-up, acceleration/deceleration, and idling, ECU performs correction control based on information from sensors.

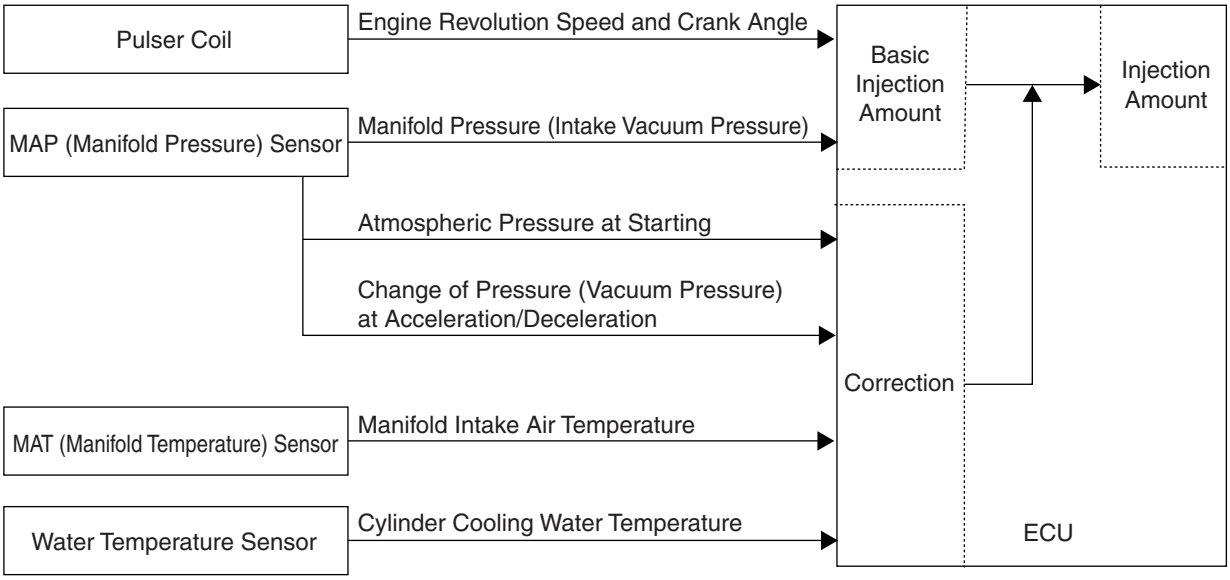

1) Fuel Injection Timing

Fuel injection timings at starting and during normal operation are described in the following table.

Cylinder No.	Reference Signal	Injection Timing (with reference to individual cylinders)
1	#1 Crank Angle Signal	BTDC 365° and BTDC 5°
2	#2 Crank Angle Signal	BTDC 365° and BTDC 5°
3	#3 Crank Angle Signal	BTDC 365° and BTDC 5°

Remarks 1) Number of fuel injections : Once per revolution per cylinder (around the end of compression and exhaust strokes)
2) Injection order : #1 → #2 → #3 → #1 → #2 → #3 → #1 (every 120 degrees of crank angle)
3) Combustion order : #1 → #3 → #2 → #1 (every 240 degrees of crank angle)
4) Injection timing diagram is shown below.

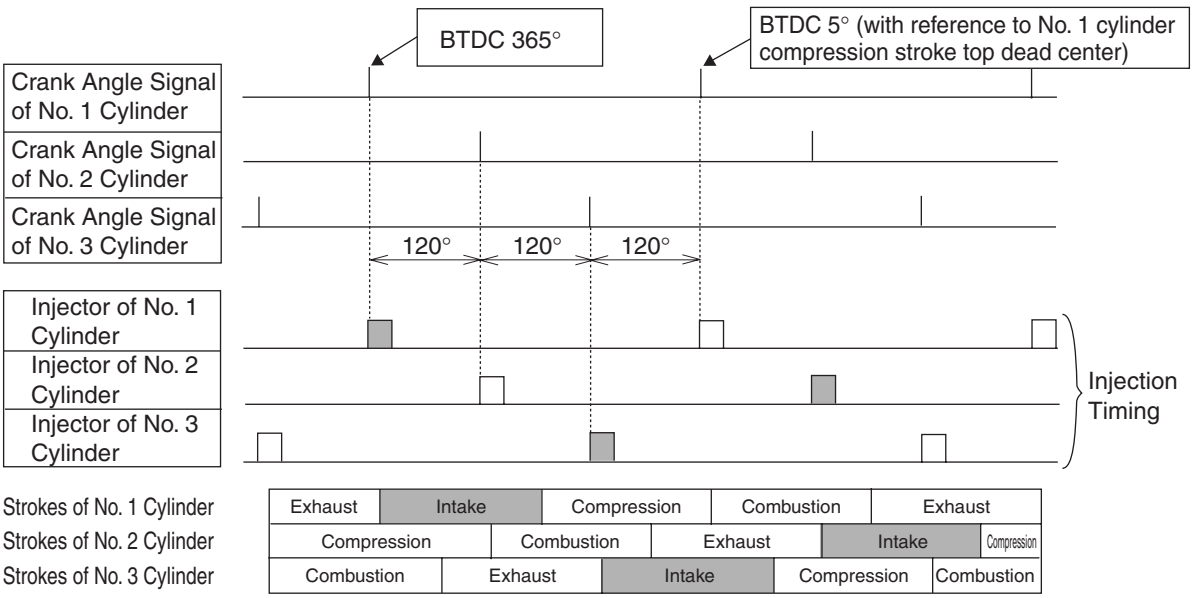

Injection Timing Diagram

2) Starting Fuel Increase Correction

At engine starting (cranking), amount of first fuel injection of each cylinder is increased (by extending injection period) to facilitate starting.

In addition to this basic correction, information including cooling water temperature, atmospheric pressure and intake air temperature in the manifold from individual sensors are used to correct the engine operation to the best operating conditions.

3) Acceleration Fuel Increase Correction

When pressure in the intake manifold is reduced below a certain setting value, ECU determines that engine is accelerated and increases fuel injection amount.

4) Deceleration Fuel Decrease Correction

When pressure in the intake manifold is increased over a certain setting value, ECU determines that engine is decelerated and decreases fuel injection amount.

5) Correction Based On Intake Air Temperature

ECU adjusts fuel injection amount for correction according to manifold intake air temperature that depends much on outboard motor operating conditions and whether engine is cold or warm.

6) Correction Based On Cylinder Cooling Water Temperature

ECU adjusts fuel injection amount for correction according to cylinder cooling water temperature when engine is rotating at low speed or high speed.

ECU increases the amount when engine is cold, and resumes standard basic amount as engine warms up.

(4) Control of Fuel Feed Pump (FFP)

During normal operation : ECU performs on/off control for fuel feed pump (FFP) by using output signal from its pump control circuit.

At starting : Pump control circuit outputs signal to pump (FFP), and power is supplied to pump driving DC motor to operate pump (FFP).

When stopping : Power supply to motor is shut off to stop pump (FFP).

(5) Control of Tachometer

ECU performs on/off control for tachometer by using pulse input signal (On-off signal).

Pulse output rate is 6 pulses per crank revolution (12 poles).

When using accessory tachometer, set selector switch to 12 p (poles).

(6) Warning Buzzer and Lamp (LED), and Control of Engine Revolution Speed

Warning System

When an abnormality occurs on the engine, warning buzzer sounds and warning lamp (LED) is lit or blinks.

In such case, engine speed is controlled but engine is not stopped.

1) Locations of warning buzzer and lamp (LED)

- Warning buzzer : In the remote control box for remote control model, or in the top cowl for tiller handle model.
- Warning lamp (LED) : On the front of bottom cowl.

Remarks : Lamp of tachometer with warning lamp (optional item) operates in synchronization with warning lamp of outboard motor.

2) Warning notification, abnormality and action to be taken

Warning System				Abnormality	Action to be taken
Buzzer	Lamp (LED)	Engine Low Speed ESG	Engine High Speed ESG		
Sounds 2 seconds	Lit 5 seconds.			This is a check for operation of warning system at starting, meaning normal.	
Continuous sound	Lit	ON		Engine cooling water temperature is abnormally high.	(1)
Continuous sound (*2)	Lit (*2)	ON(*2)		Engine oil pressure is reduced (*1).	(2)
Continuous sound	Lit		ON	Engine revolution speed is over the maximum permissible limit.	(3)
Intermittent sound (*2)	Blinking (*2)	ON(*2)		Water temperature sensor or MAP (Manifold Pressure) sensor is defective or the sensor circuit is disconnected.	(4)

Remarks *1 : When oil pressure switch is on.

*2 : Stop engine to cancel warning notification.

Note : When engine low speed ESG goes on, the speed is reduced to 2,800 r/min or lower.
Therefore, continuous operation in this state should be avoided.
When engine high speed ESG goes on, the speed is set to 6,300 r/min.
ECU stops firing of spark plugs to control the speed to 6300 r/min.
Continuous operation in this state should be avoided.

Action to be taken

(1) : Run immediately to a safe location, set throttle to slow speed, shift into neutral (N), check that cooling water is discharged to check port, and then, stop engine.
Remove dirt, plastic sheet or other matters that clogs water intake port, if any.
If no water is discharged from the port, check each section of the outboard motor.

(2) : Run immediately to a safe location, set throttle to slow speed, shift into neutral (N), and stop engine.
Check engine oil level, and add oil if necessary.
If engine oil level is within specified range, check other sections.

(3) : Run immediately to a safe location, set throttle to slow speed, shift into neutral (N), and stop engine.
Check propeller blades for bend or damages.
If this abnormality continues even after propeller is replaced with new one, check other sections.

(4) : Go to the nearest port immediately and check each section after stopping engine.

5. Ignition System

For ignition system, pointless CD ignition system is adopted, and ECU's electronic ignition timing control system controls the timing to the most suitable state according to current operating conditions.

As engine is cranked, electric current is generated in the alternator's exciter coil and ECU charge coil, which is input to ECU's regulator to feed power needed for operations of ignition coil, fuel injector and fuel feed pump (FFP).

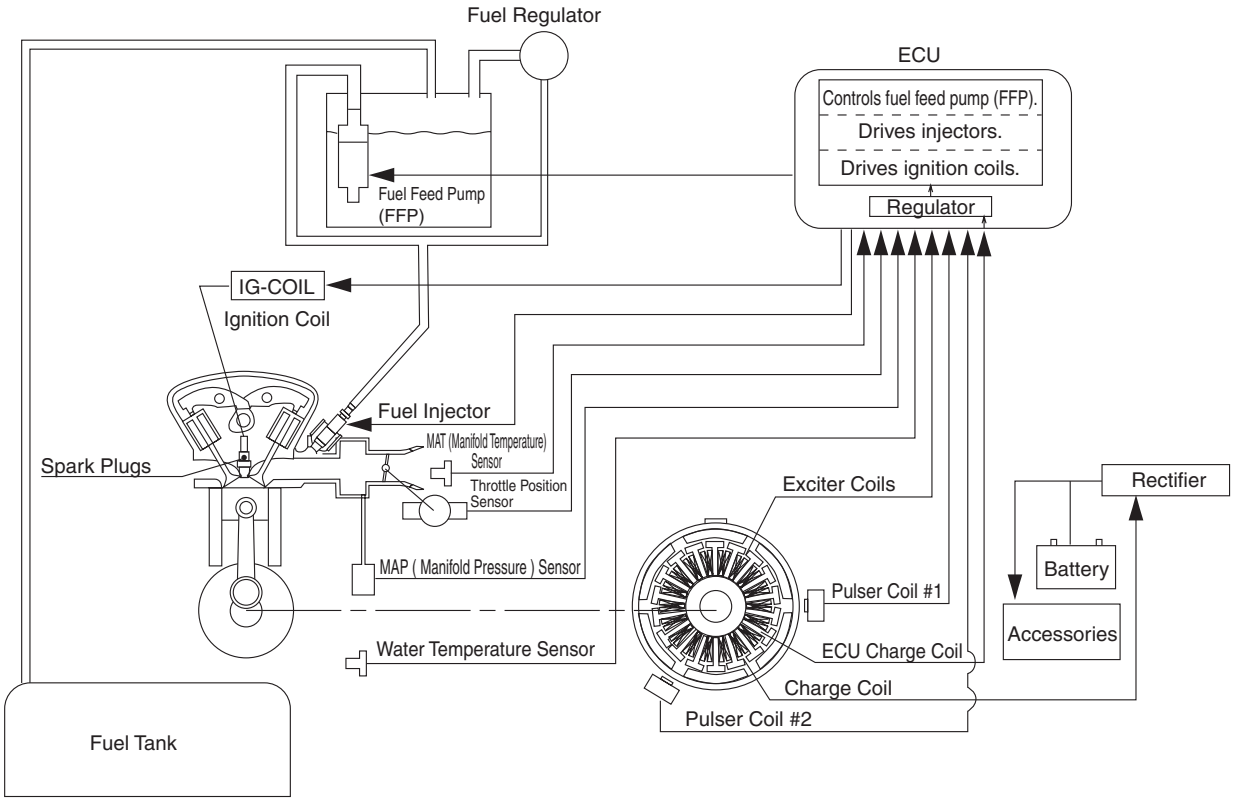

(1) Configuration of Ignition System

Ignition system consists mainly of the following components.

(1) Sensors and switches that transmit engine operating states to ECU.

(2) ECU that performs electronic control.

(3) Ignition coils and spark plugs that operate in accordance with control by ECU.

The following 6 components are included in the sensors and switches of (1).

• Pulser coil	Crank position (Crank Position Sensor)
• Throttle Position Sensor (TPS)	Open/close of thrittle
• Water Temperature Sensor	Temperature of cooling water
• MAP (Manifold Pressure) Sensor	Vacuum pressure of intake air
• MAT (Manifold Temperature) Sensor	Temperature of intake air
• Oil Pressure Switch	Reduction of hydraulic pressure

(2) Ignition Control

ECU's microcomputer is programmed with ignition timings best suited to engine's operating conditions. ECU obtains information about engine operating state such as revolution speed, throttle opening, manifold pressure (air intake vacuum pressure) and cooling water temperature based on the signals from the abovementioned sensors to generate ignition timing signal at the most suitable timings.

1) Ignition Timing Controls

Controls of ignition timing is classified into two controls, which are correction of ignition timing during normal operation and fixing of ignition timing (at engine starting and when an abnormality has occurred). In either case, ECU corrects ignition time or fixes it to the base.

- Basically, ignition timing is determined on engine revolution speed and manifold pressure (intake air vacuum pressure).
- Signals that are used for correction of ignition timing includes cooling water temperature, manifold intake air temperature, change of pressure at acceleration/deceleration under atmospheric pressure, and engine revolution speed.
- Ignition timing is fixed to the base at acceleration, deceleration, when high speed ESG is on, low speed ESG is on, or when hydraulic pressure is reduced.

2) Ignition and Combustion Orders

No. of Ignitions : Once per revolution per cylinder (around the end of compression and exhaust strokes)
Ignition Order : #1 → #2 → #3 → #1 → #2 → #3 → #1 (every 120 degrees of crank angle)
Combustion Order : #1 → #3 → #2 → #1 (every 240 degrees of crank angle)

4

3) Ignition Timing

Ignition timing is set as described below.

Model	Range of Ignition Angle	Engine Starting	Idling	Accelerating
25/30B	TDC 0° to BTDC 38°	BTDC 5°	BTDC 5°±5°	BTDC 38°

4) Operations

- At Engine Starting and During Warm-up
  Ignition timing is fixed to BTDC 5° until engine revolution speed reaches set value.
  At revolution speed over the set value, microcomputer determines ignition timing in accordance with ECU's program by using cooling water temperature, manifold intake air temperature, atmospheric pressure and engine revolution speed.

- During idling and low speed running
  When ECU receives manifold pressure (intake air vacuum pressure) signal and input signal from pulser coil (engine revolution speed signal), it controls ignition timing so that idling and low speed revolution speeds stabilize.

- During normal operation
  Microcomputer determines ignition timing in accordance with ECU's program by using cooling water temperature, manifold intake air temperature, atmospheric pressure and engine revolution speed as input signals. The maximum timing during normal operation is BTDC 38°.

- During acceleration/Deceleration
  When engine revolution speed changes much and is reduced below (or exceed) a setting value, ECU determines that engine is accelerating (or decelerating), and microcomputer determines the ignition timing based on the program installed in ECU.

- At engine over-revolution
  When engine revolution speed exceeds the maximum allowable value (6,300r/min), ECU stops ignition to control the revolution based on pulser coil signals. This is the state that engine high speed ESG is "ON".

- Engine low speed ESG is "ON".
  When any of the following state has been detected, engine revolution speed is controlled to 2,800r/min to prevent or reduce engine damage. This is the state that engine low speed ESG is "ON".
  - Engine is overheating. : Water temperature sensor detects 90° or higher.
  - Engine hydraulic pressure is low. : Oil pressure switch ON (24.5kPa (3.6PSi) [0.25kg/cm^2] or less) is detected for 5 seconds or longer.
    Water temperature sensor or MAP (Manifold Pressure) sensor is defective or the sensor circuit is disconnected.

(3) Fuel Feed System

Fuel pump ④ (low pressure mechanical type) draws fuel from fuel tank ①, and feed it to fuel feed pump ⑥ (FFP) located in the vapor separator ⑤ through fuel connector ② and fuel filter ③.

Highly pressurized fuel passes through fuel cooler ⑦ and high pressure fuel filter ⑧, fed into fuel rail ⑨ and fuel injector ⑩, and then, injected into intake manifold.

Excessive fuel that is not used by fuel injector ⑩ (fuel that cannot enter high pressure fuel hose to fuel rail ⑨) passes through high pressure fuel filter ⑦ and then fuel regulator ⑪, and returns to vapor separator ⑤ to keep fuel pressure constant.

Stabilization of fuel pressure is performed by fuel regulator.

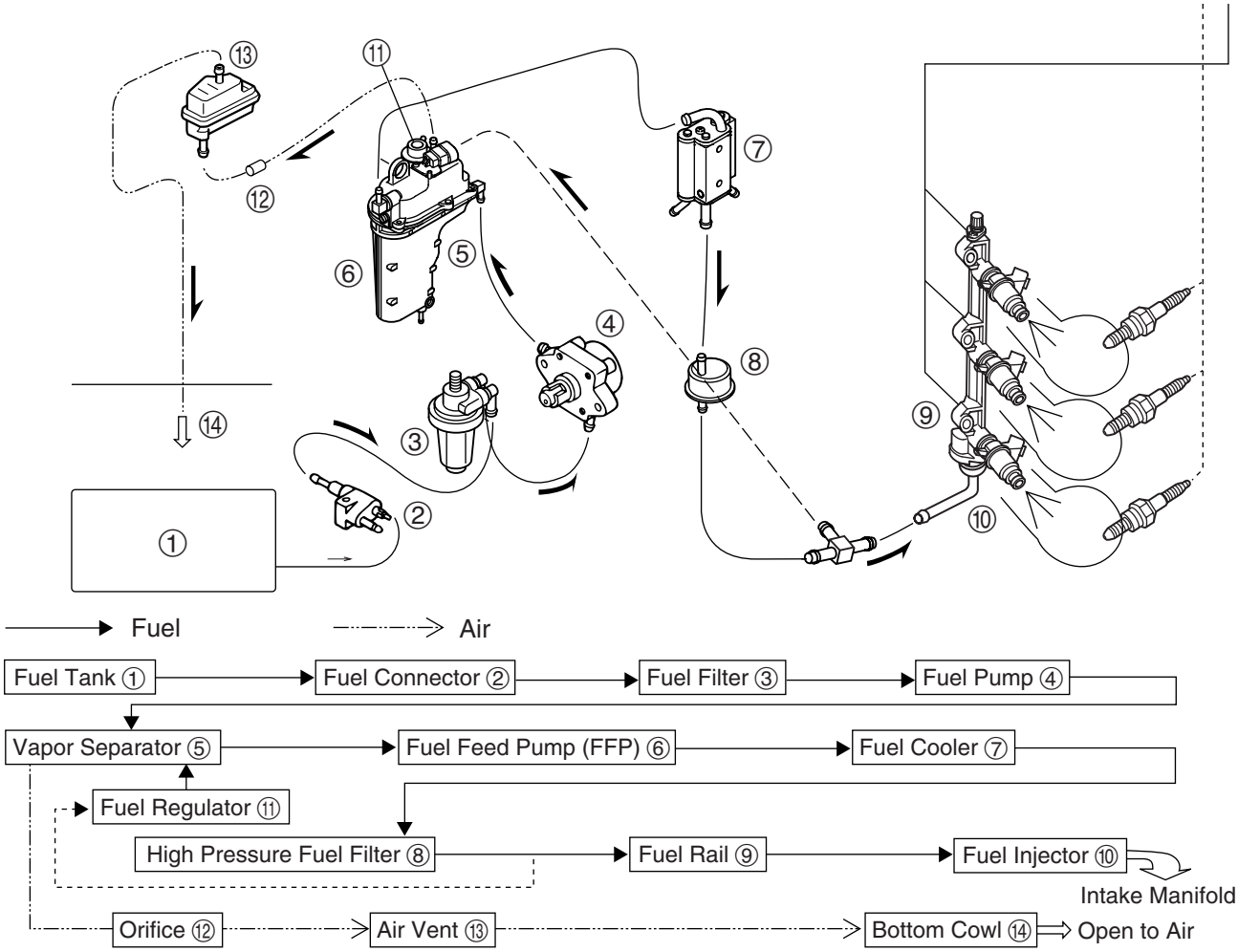

6. Components of Fuel Feed System

1) Fuel Pump (Low Pressure Mechanical Pump)

Fuel pump is diaphragm pump that is operated mechanically by cam shaft.

Pump base is plastic components shuts off heat of engine block to protect fuel pump from engine heat.

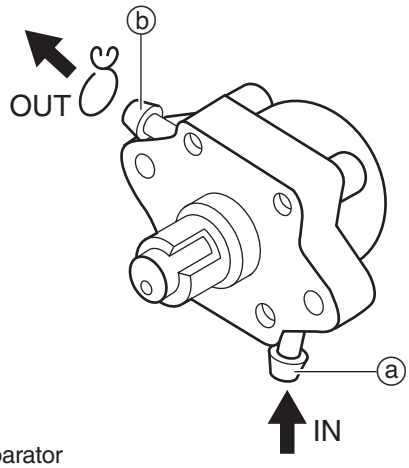

ⓐ IN : Fuel from Filter/Tank

ⓑ OUT : Fuel Outlet to Vapor Separator

4

2) Vapor Separator

Vapor separator feeds only liquid fuel for internal fuel feed pump (FFP) (electrical high pressure pump). Fuel that is fed from fuel pump (low pressure mechanical pump) is sent to upper part of vapor separator, where it is controlled with needle valve/float ass'y. High pressure fuel from fuel feed pump (FFP) is fed to fuel cooler, high pressure fuel filter, fuel rail and fuel injector. Excessive fuel is returned to vapor separator by fuel regulator.

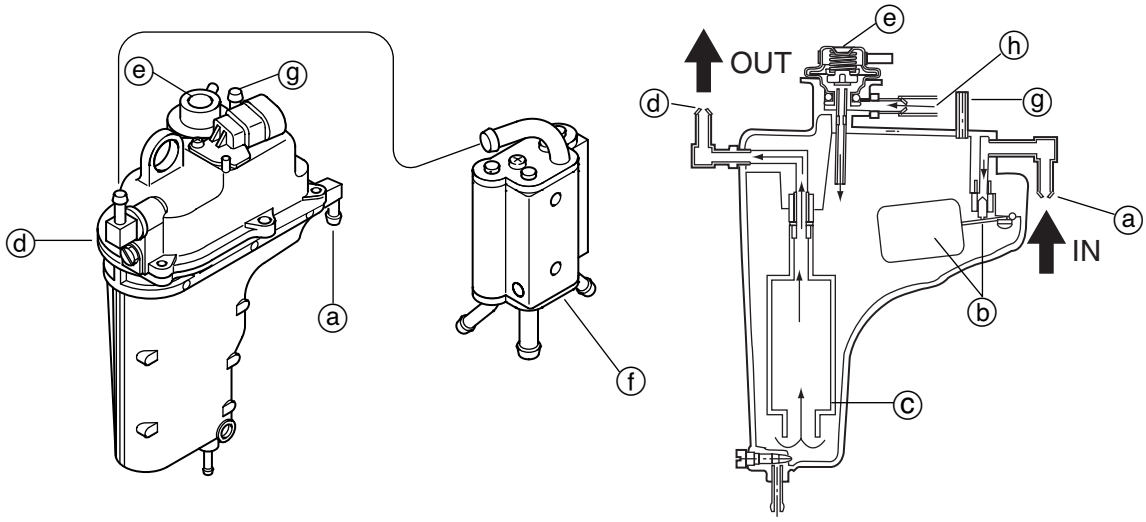

ⓐ Fuel from Fuel Pump

ⓑ Needle Valve and Float

ⓒ Fuel Feed Pump (FFP)

ⓓ Fuel to Fuel Cooler

ⓔ Fuel Regulator

ⓕ Fuel Cooler

ⓖ Air to Air Vent

ⓗ Excessive Fuel from T Nipple

3) Fuel Regulator

Fuel regulator located on the upper section of vapor separator serves to keep regular fuel pressure.

Fuel regulator consists of diaphragm with built in spring that actuates valve/seat, and returns (pressurized) excessive fuel to vapor separator when the pressure exceeds certain value.

Excessive fuel is returned to vapor separator through internal pipe below fuel level to prevent it from bubbling.

Spring side ⓐ of diaphragm is open to air so that change of atmospheric pressure is applied to diaphragm.

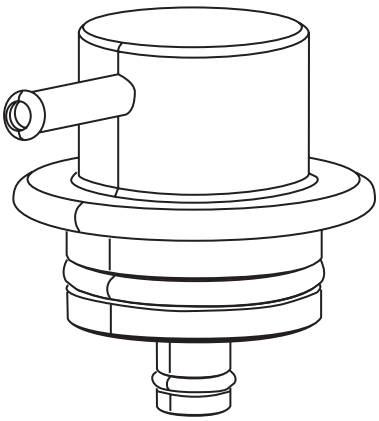

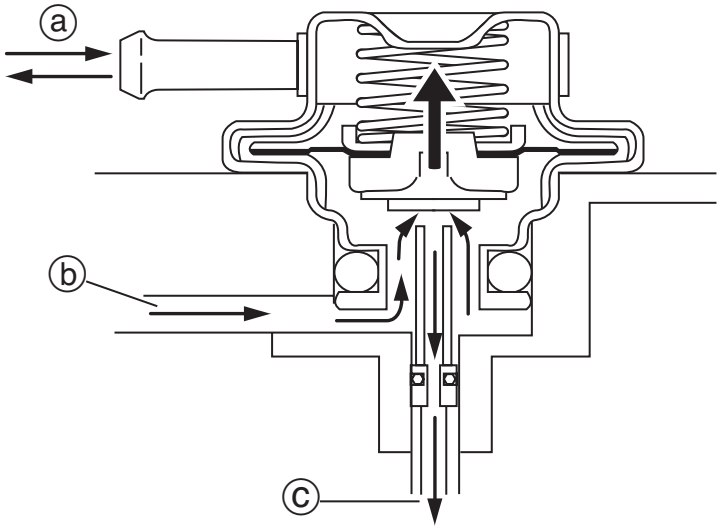

ⓐ To Bottom Cowl (open to air)

ⓑ High Pressure Fuel from Fuel Cooler

ⓒ Excessive fuel returns to vapor separator.

4) Fuel Cooler

Fuel cooler (heat exchanger) is connected between vapor separator and high pressure fuel filter, and uses engine cooling water to cool high pressure fuel to fuel injector and excessive fuel to vapor separator. It serves to prevent fuel vapor lock and fuel feed pump (FFP) from wear by removing heat from circulating excessive (high pressure) fuel.

ⓐ Fuel from Vapor Separator/FFP

ⓑ Fuel to High Pressure Fuel Filter

ⓒ Cooling Water from Cylinder Block

ⓓ Cooling Water to Check Port

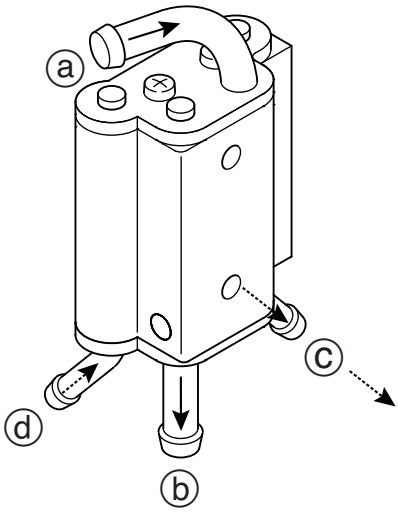

7. Outline of Fuel Injection System

1) Air Intake System

Air intake system consists of components including intake manifold ① (passage to cylinders that is coupled with common air chamber), throttle position sensor ③, throttle body/shutter ②, ISC (idle speed control) valve ④, MAP (manifold pressure) sensor ⑤, and MAT (manifold temperature) sensor ⑥.

Intake manifold ① is provided with fuel rail and fuel injectors.

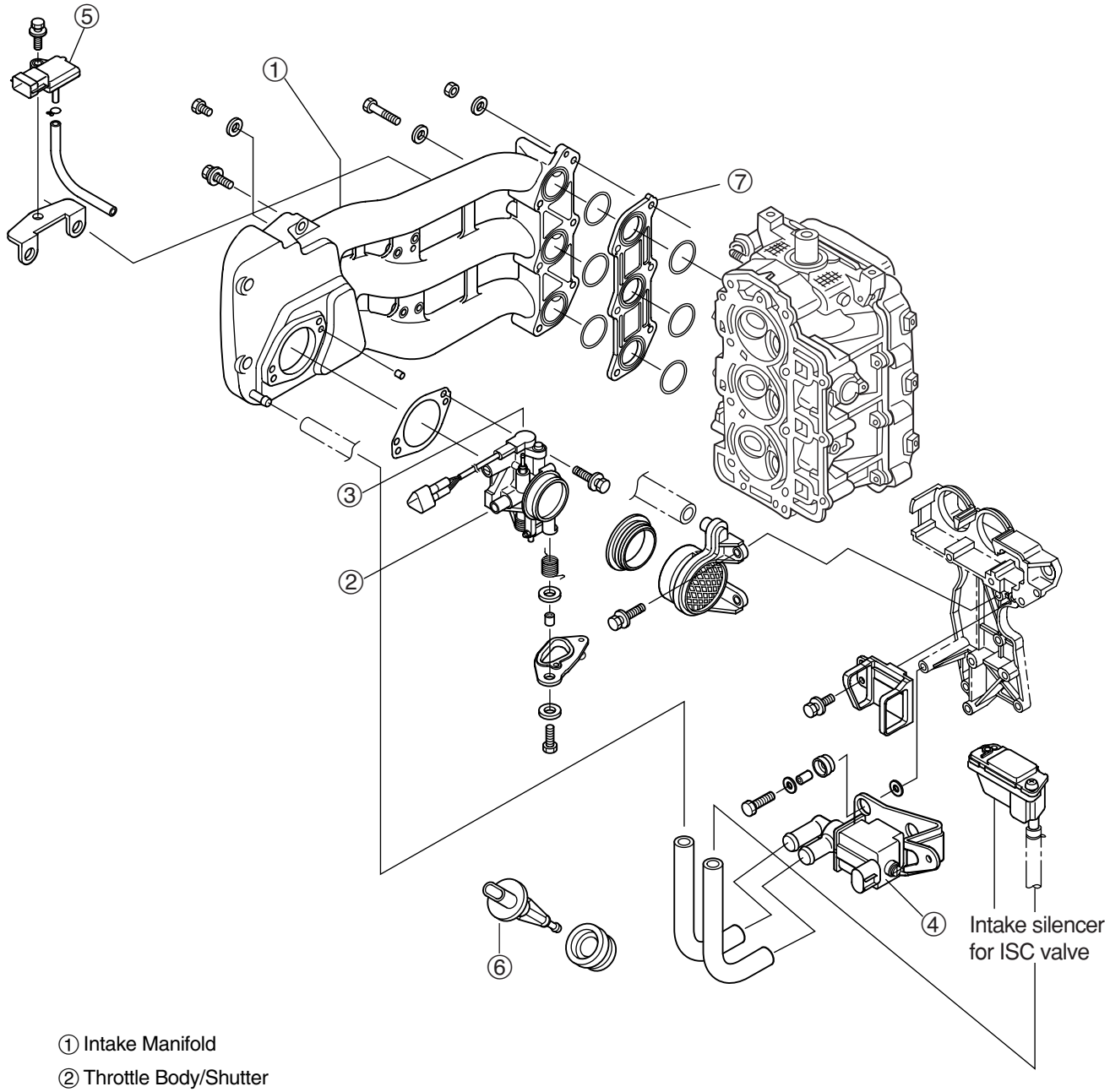

① Intake Manifold
② Throttle Body/Shutter
③ Throttle Position Sensor
④ ISC (Idle Speed Control) Valve
⑤ MAP (Manifold Pressure) Sensor
⑥ MAT (Manifold Temperature) Sensor
⑦ Insulator (head shield panel)

8. Inspection Items

1) Inspection of Fuel Supply System Piping

Check the fuel system piping for fuel leak, dirt, deterioration and damage, and replace or clear parts if necessary.

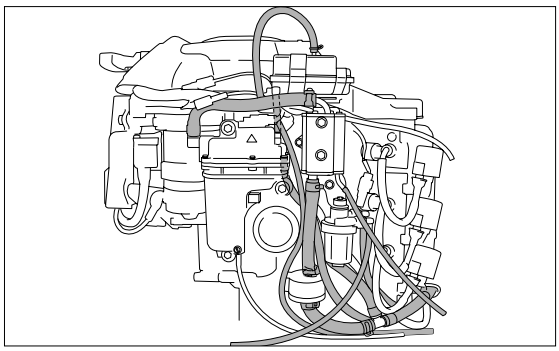

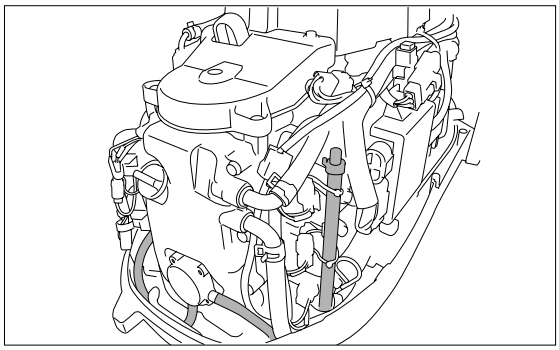

2) Inspection of Filter

1. Check filter for dirt, build up of fuel slag, and fuel filter cup ② for invasion of foreign matters and crack. Clean fuel filter cup ② with gasoline, and replace fuel filter ① if necessary.

> When removing fuel filter cup, do not spill fuel by absorbing it with rag.

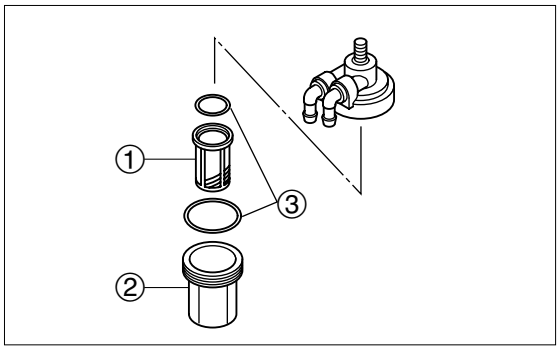

③ O Ring **Do not reuse.**

2. Cleaning Fuel Tank Filter
   Remove fuel pick up elbow ⑤ of fuel tank ④ counterclockwise to remove the part, and clean the filter ⑥.

3. Cleaning Fuel Filter
   Remove dirt and water from fuel tank ④ if any.

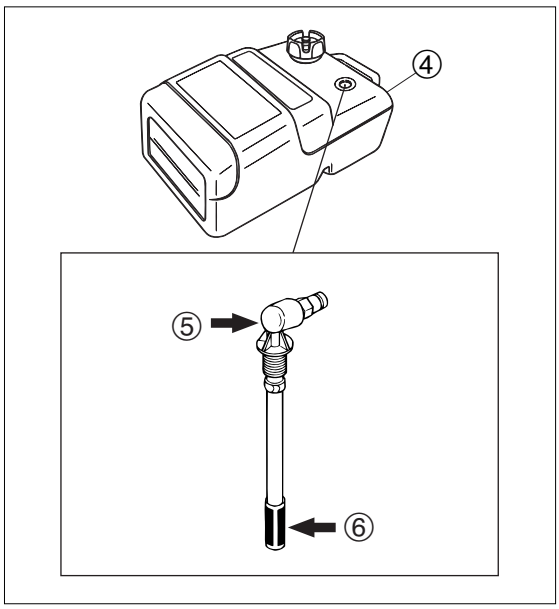

④ Fuel Tank ⑤ Fuel Pick Up Elbow
⑥ Filter

4. Replacement of High Pressure Fuel Filter

This filter cannot be disassembed.

Replace every 200 hours or 2 years.

- Disconnect fuel connector when performing this replacement work.
- Attach filter in proper direction.
- Be sure to use hose clip.

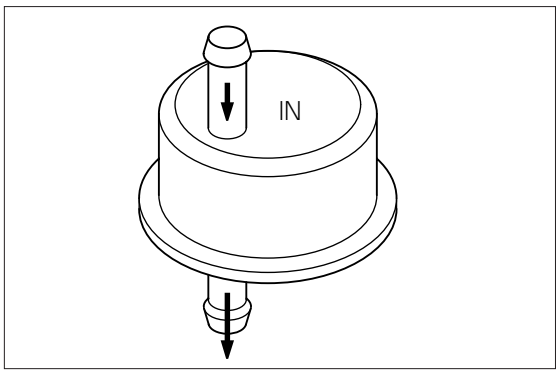

5. Cleaning Fuel Feed Pump (FFP) Filter

Remove filter ⑦ from fuel feed pump (FFP) located in the vapor separator, and clean filter ⑦.

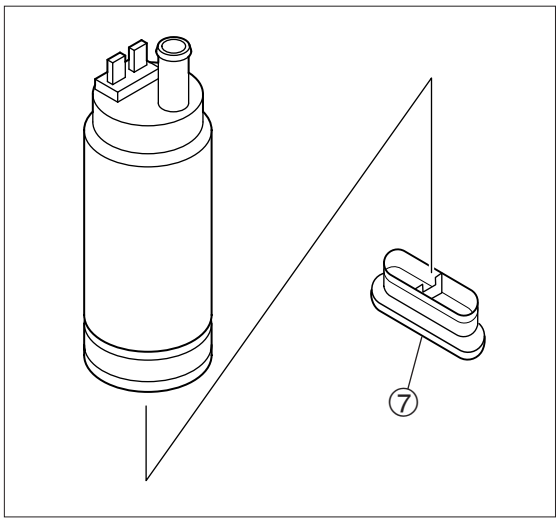

4

3) Inspection of Fuel Pump

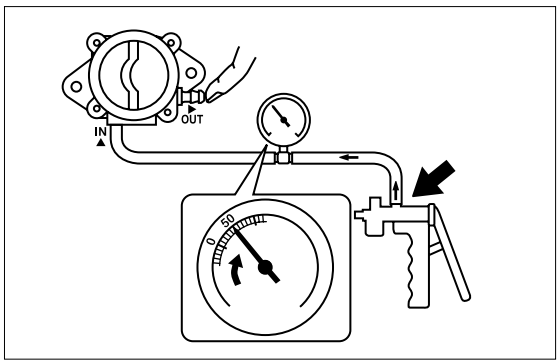

1. Remove fuel hoses (2) from fuel pump.

2. Connect vacuum/pressure gauge to inlet of fuel pump.

3. Close fuel pump outlet with a finger and apply specified pressure. Check if no air leaks.

Vacuum/Pressure Gauge :
P/N. 3AC-99020-0

Specified Pressure :
0.049 MPa (7 psi) [0.5 kgf/cm^2]

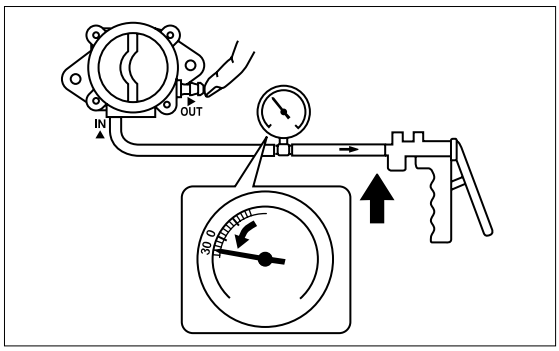

4. With the outlet closed, apply specified vacuum pressure to check that no air leaks.

Specified Pressure :
−0.029MPa (−4 psi) [−0.3 kgf/cm^2]

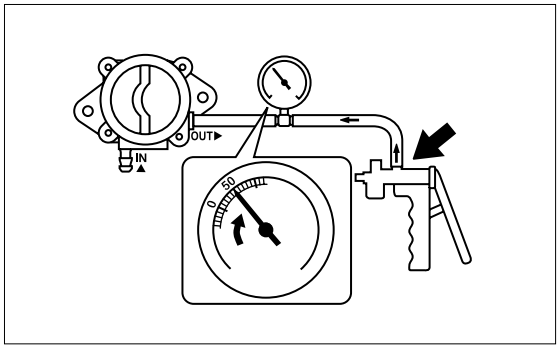

5. Connect vacuum/pressure gauge to outlet of fuel pump.

6. Apply specified pressure to check if no air leaks. Replace if necessary.

Air-tightness of fuel pump can be increased by making the interior wet with gasoline.

Specified Pressure :
0.029 MPa (4 psi) [0.3 kgf/cm^2]

4) Inspection of Fuel Connector

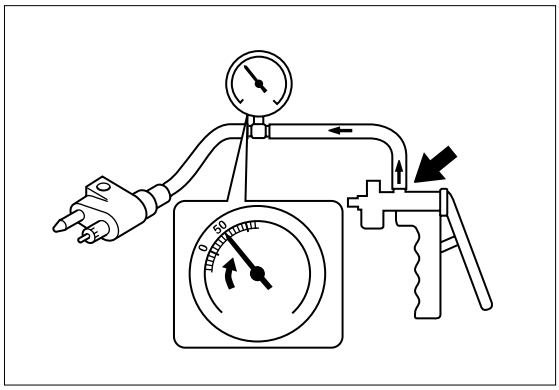

1. Check fuel connector for crack and damage.

2. Connect vacuum/pressure gauge to outlet of fuel connector.

3. Apply specified pressure, and check if the pressure is maintained for 10 seconds. Replace if necessary.

Vacuum/Pressure Gauge :
P/N. 3AC-99020-0

Specified Pressure :
0.029 MPa (4 psi) [0.3 kgf/cm^2]

5) Measuring fuel pressure

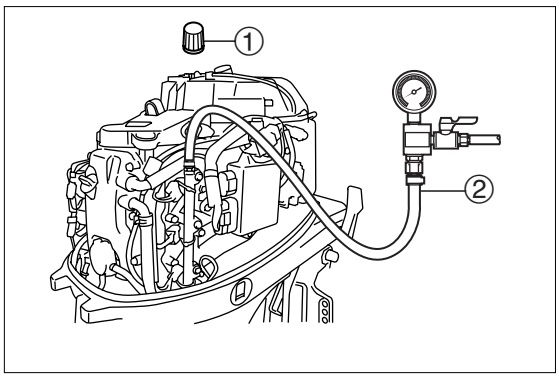

1. Remove cap ①.

2. Connect pressure gauge ② as shown.

⚠ WARNING

- **Before connecting pressure gauge, cover connection between pressure gauge and valve with clean and dry cloth to prevent fuel from releasing.**
- **Connect pressure gauge securely.**

Pressure Gauge Ass'y :
P/N. 3T5-72880-0

⚠ WARNING

Before measurement, check that pressure relief valve is fully closed.

3. Start engine run 5 minutes to warm up, and then measure fuel pressure. If the pressure is below specified value, check high pressure fuel passage and vapor separator.

⚠ WARNING

- **Before measurement, be sure to check that pressure relief valve is fully closed.**
- **Do not open pressure relief valve during measurement. Opening the valve allows fuel to spew out, possibly causing fire.**
- **After measurement, cover hose tip with rag, and open pressure relief valve to drain fuel from discharge hose and the instrument.**
- **Before storing pressure gage, fully close pressure relief valve.**

Fuel Pressure (Reference) :
0.29 MPa (43 psi) [3.0 kgf/cm^2] ±10%

- Use 3AC diagnosis system when measuring fuel pressure without operating engine.
- If engine cannot be started, crank 4 to 5 revolutions by using starting motor or recoil starter to measure fuel pressure.

4

6) Inspection of Fuel Regulator

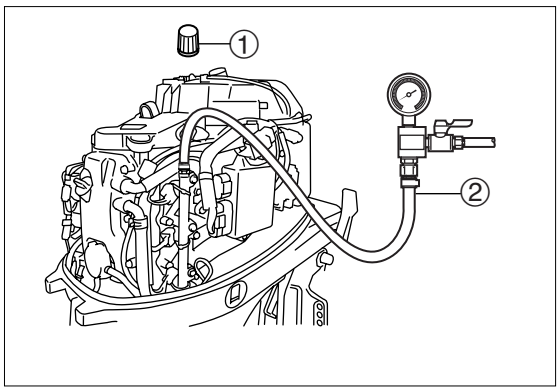

1. Remove cap ①.

2. Connect pressure gauge ② as shown.

⚠ WARNING

- **Before connecting pressure gauge, cover connection between pressure gauge and valve with clean and dry cloth to prevent fuel from releasing.**
- **Connect pressure gauge ass'y securely.**

Pressure Gauge Ass'y :
P/N. 3T5-72880-0

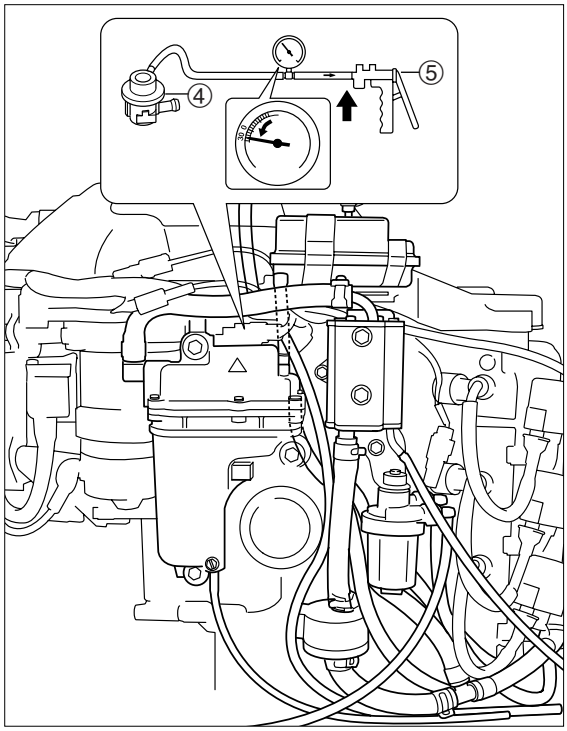

3. Disconnect thin vent hose from fuel regulator, and connect vacuum/pressure gauge ④ to fuel regulator ⑤.

Vacuum/Pressure Gauge :
P/N. 3AC-99020-0

4. Start engine and keep running at idle revolution speed.

Fuel Pressure (Reference) :
0.29 MPa (43 psi) [3.0 kgf/cm^2] ±10%

5. Apply vacuum pressure to fuel regulator ④ to check if fuel pressure is reduced. If fuel pressure is not reduced, replace fuel regulator ⑤.

⚠ WARNING

- **Before measurement, be sure to check that pressure relief valve is fully closed.**
- **Do not open pressure relief valve during measurement. Opening the valve allows fuel to spew out, possibly causing fire.**
- **After measurement, cover hose tip with rag, and open pressure relief valve to drain fuel from discharge hose and the instrument.**
- **Before storing pressure gage, fully close pressure relief valve.**

7) Draining Fuel

1. Remove cap ①.

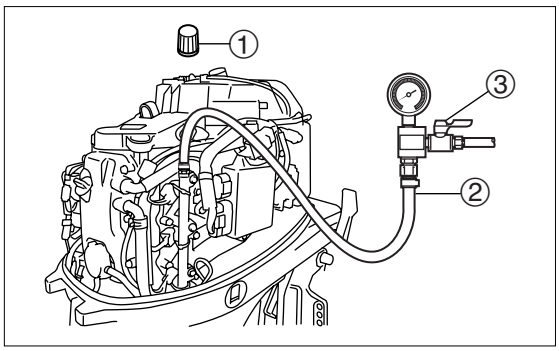

2. Connect pressure gauge ass'y as shown, place a vessel below pressure relief hose, and open pressure relief valve to release fuel pressure.

> **⚠ WARNING**
> **Be sure to reduce fuel pressure in high pressure fuel passage before servicing fuel passage and/or vapor separator. Performing the service without releasing pressure allows compressed fuel to blast out, possibly causing hazard.**

3. Place a vessel below vapor separator drain hose, and loosen drain screw ③ to drain fuel from vapor separator drain hose.

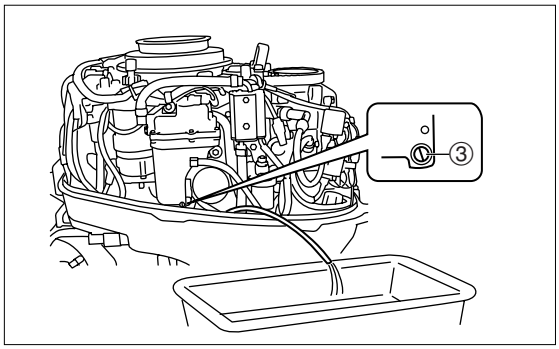

8) Disassembly of Vapor Separator

> **⚠ WARNING**
> **Be sure to reduce fuel pressure in high pressure fuel passage before servicing fuel passage and/or vapor separator. Performing the service without releasing pressure allows compressed fuel to blast out, possibly causing hazard.**

1. Remove float chamber of vapor separator.

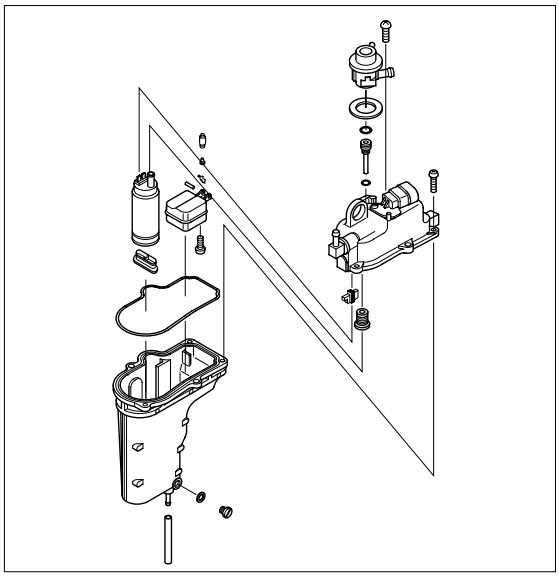

2. Remove needle valve, float pin and float.

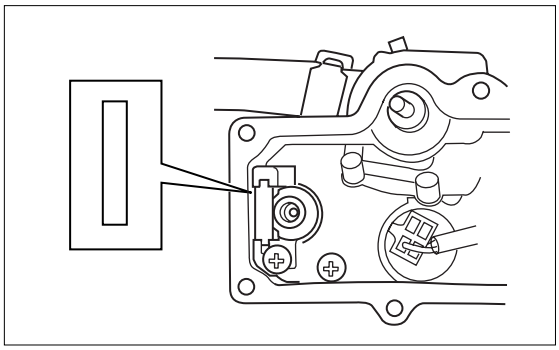

9) Inspection of Vapor Separator

1. Check needle valve for bend and wear. Replace if necessary.

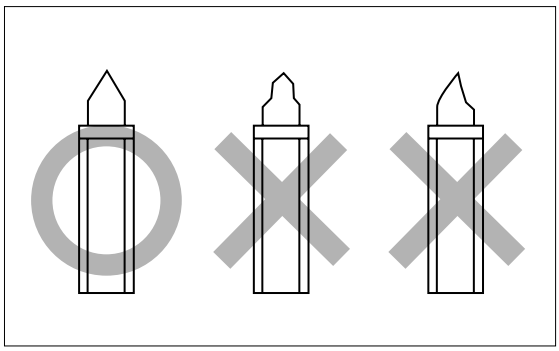

2. Check float for deformation. Replace if necessary.

3. Check filter for dirt and clogging. Clean if necessary.

4. Reinstall needle valve, float and float pin, and check that the parts moves smoothly.

5. Check float drop ⓐ as shown.

Float Drop (Reference) ⓐ :
30.0 mm (1.181 in)

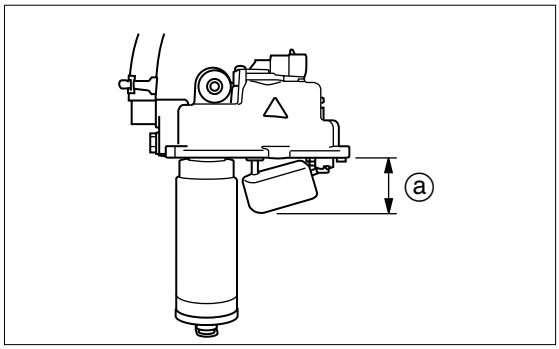

6. Check float height ⓑ as shown. Replace float or needle valve if the height is out of the specified range.

Do not press needle valve with float.

Float Height ⓑ :
20.0 to 23.0 mm (0.787 to 0.906 in)

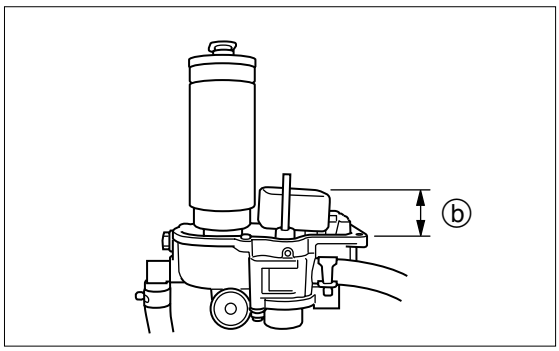

10) Reassembly of Vapor Separator

1. Attach float chamber to vapor separator.

2. Reassemble all parts that were removed.

Check that hose is reconnected correctly.

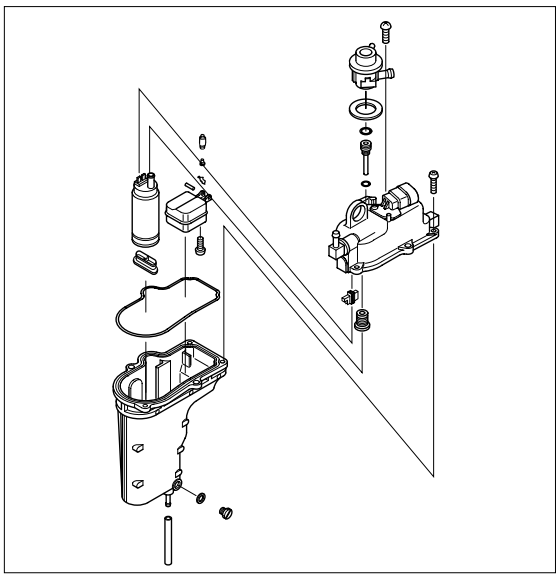

11) Inspection of ISC (Idle Speed Control)

1. Use diagnosis system to check operation of ISC (Idle Speed Control) valve.

2. Disconnect hose at intake silencer side of ISC valve, close the hole from which the hose was disconnected with a finger to check if engine speed is reduced. Replace ISC valve if not.

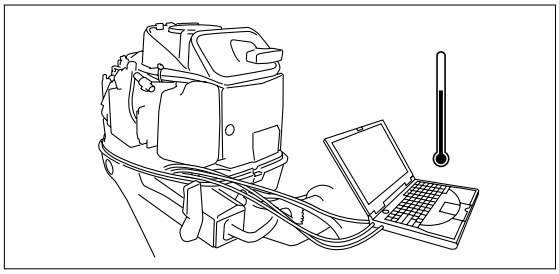

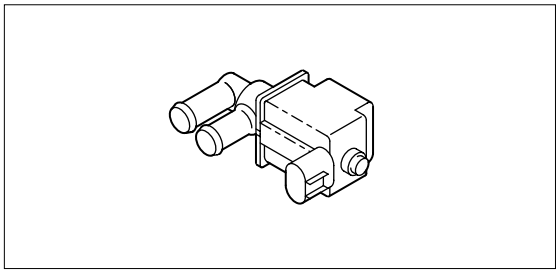

12) Inspection of Idle Speed

1. Start engine and run for 5 minutes to warm up.

2. Attach tachometer to high tension cord ① to check idle speed.

More accurate and stable reading can be obtained when tachometer lead is connected with high tension cords of individual cylinders linked with each other.

Tachometer :
P/N. 3AC-99010-0

Idle Speed :
850 ± 30 r/min

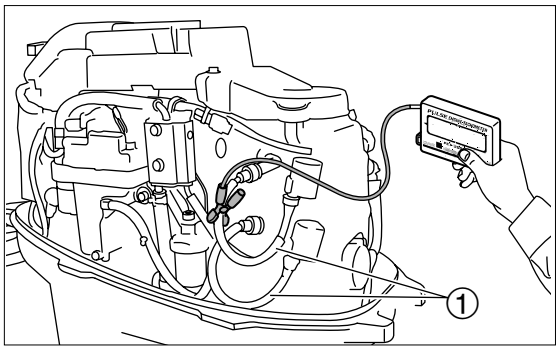

5

Power Unit

1 Special Tools ····· 5-2
2 Parts Layout ····· 5-3
Engine ····· 5-3
Recoil Starter ····· 5-4
Magneto & ECU ····· 5-5
Electric Parts ····· 5-6
Fuel Pump, Fuel Rail, Vapor Separator ····· 5-8
Intake Manifold ····· 5-11
Cam Shaft & Oil Pump ····· 5-12
Cylinder Head ····· 5-13
Intake Valve & Exhaust Valve ····· 5-14
Cylinder ····· 5-15
Piston & Crankshaft ····· 5-16
Top Cowl ····· 5-17
3 Inspection Items ····· 5-18
1) Inspection of Compression Pressure ····· 5-18
2) Inspection of Oil Pressure ····· 5-19
3) Inspection of Valve Clearance ····· 5-20
4) Removing Power Unit ····· 5-22
5) Removing Timing Belt and Pulley ····· 5-25
6) Inspection of Timing Belt ····· 5-26
7) Installation of Pulley and Timing Belt ····· 5-27
8) Removing Cylinder Head ····· 5-30
9) Inspection of Valve Spring ····· 5-32
10) Inspection of Valve ····· 5-33
11) Inspection of Valve Guide ····· 5-33
12) Inspection of Valve Seat ····· 5-34
13) Correction of Valve Seat ····· 5-35
14) Inspection of Rocker Arm and Rocker Arm Shaft ····· 5-37
15) Inspection of Cam Shaft ····· 5-38
16) Inspection of Cylinder Head ····· 5-39
17) Inspection of Oil Pump ····· 5-40
18) Installation of Valves ····· 5-41
19) Installation of Cam Shaft ····· 5-42
20) Installation of Rocker Arm Shaft ····· 5-42
21) Installation of Oil Pump ····· 5-43
22) Installation of Cylinder Head ····· 5-44
23) Disassembly of Cylinder Block ····· 5-45
24) Inspection of Piston Outer Diameter ····· 5-46
25) Inspection of Cylinder Inner Diameter ····· 5-46
26) Inspection of Piston Clearance ····· 5-46
27) Inspection of Piston Ring Side Clearance ····· 5-47
28) Inspection of Piston Rings ····· 5-47
29) Inspection of Piston Pins ····· 5-48
30) Inspection of Connecting Rod Small End Inner Diameter 5-48
31) Inspection of Connecting Rod Big End Side Clearance 5-48
32) Inspection of Crankshaft ····· 5-49
33) Inspection of Crank Pin Oil Clearance ····· 5-50
34) Inspection of Crankshaft Main Journal Oil Clearance ····· 5-51
35) Inner Diameter of Cylinder/Crank Case Bearing Holder (Inner Diameter Code) ····· 5-52
36) Thickness of Bearing (Color of Inner Diameter Code) ····· 5-52
37) Assembling Piston and Connecting Rod ····· 5-53
38) Installation of Power Unit ····· 5-57
39) Removing Recoil Starter ····· 5-59
40) Disassembly of Recoil Starter ····· 5-59
41) Inspection of Recoil Starter ····· 5-60
42) Installation of Recoil Starter ····· 5-61

1.Special Tools

	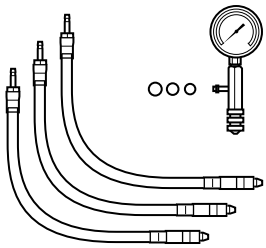	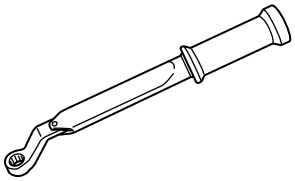	
Piston Slider P/N. 3AC-72871-0	Compression Gauge P/N. 3AC-99030-0	Torque Wrench P/N. 3AC-99070-0	Valve Clearance Driver P/N. 3AC-99071-0
Installing piston	Measuring compression pressure	Adjusting valve clearance	Adjusting valve clearance
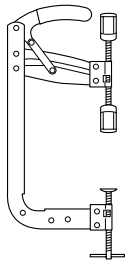	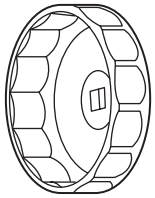	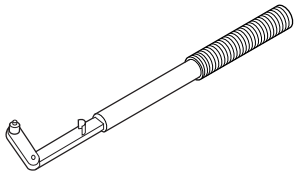	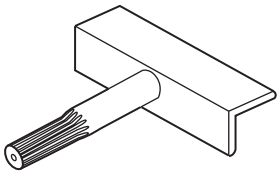
Valve Spring Compressor P/N. 3AC-99075-0	Oil Filter Wrench P/N. 3AC-99090-0	Flywheel Holder P/N. 3AC-99200-0	Crankshaft Holder 2 P/N. 3AC-99815-0
Removing/installing valve spring	Removing/installing oil filter	Removing/installing flywheel nut	Holding crankshaft
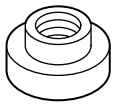	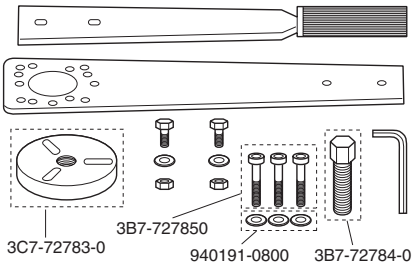		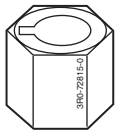
Oil Seal Attachment P/N. 3AC-99820-0	Flywheel Puller Kit P/N. 3C7-72211-1		Crank Shaft Holder P/N. 3R0-72815-0
Installing oil seal	Removing/installing flywheel		Holding crank shaft

2. Parts Layout

Engine

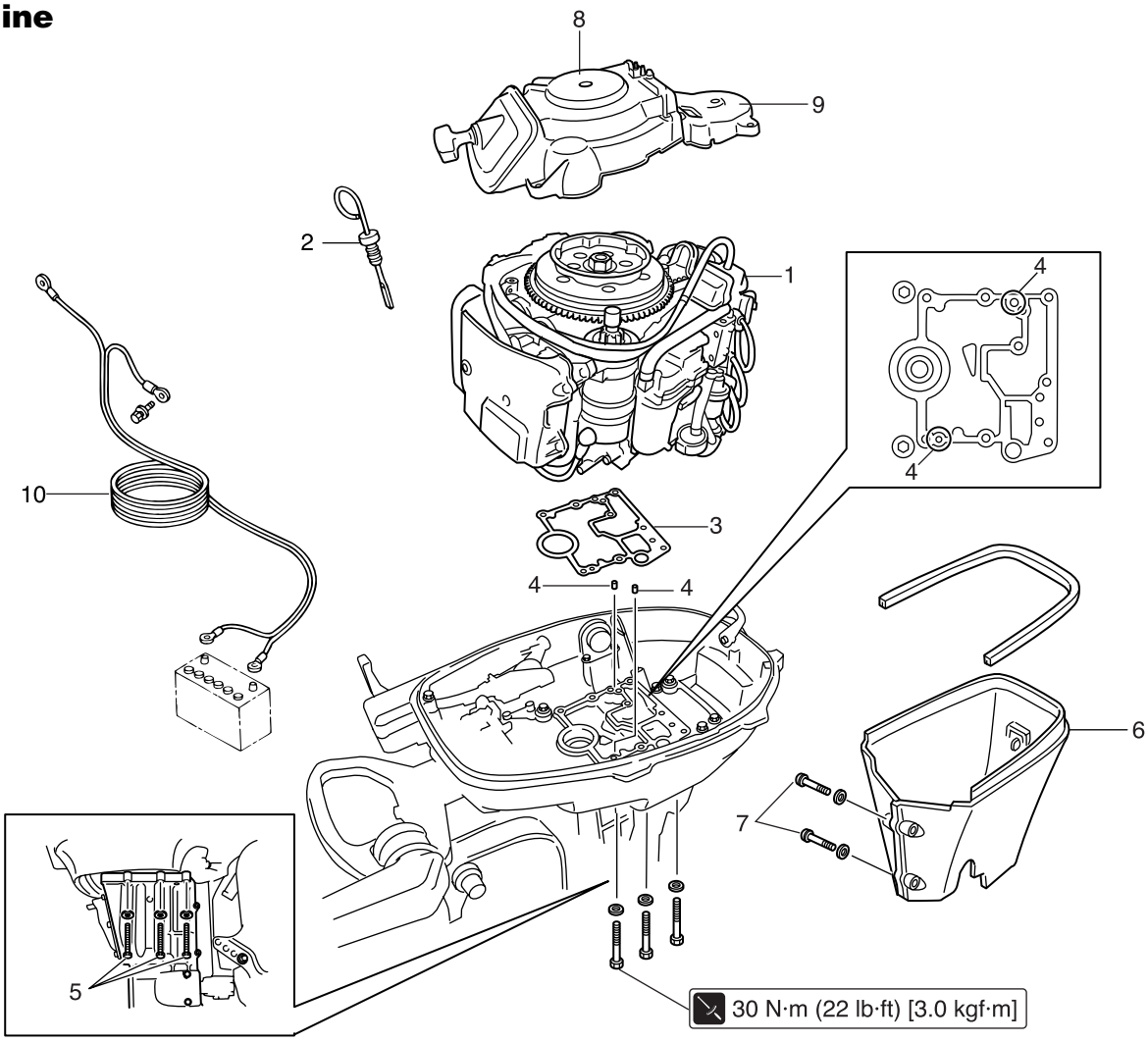

Ref. No.	Description	Q'ty	Remarks
1	Power Unit	1	
2	Oil Level Gauge	1	
3	Gasket	1	**Do not reuse.**
4	Dowel Pin	2	
5	Bolt	6	M8 L=105mm
6	Apron	1	
7	Screw	2	M6 L=60mm
8	Recoil Starter	1	
9	Belt Cover	1	
10	Battery Cable	1	

Recoil Starter

P/L Fig. 11

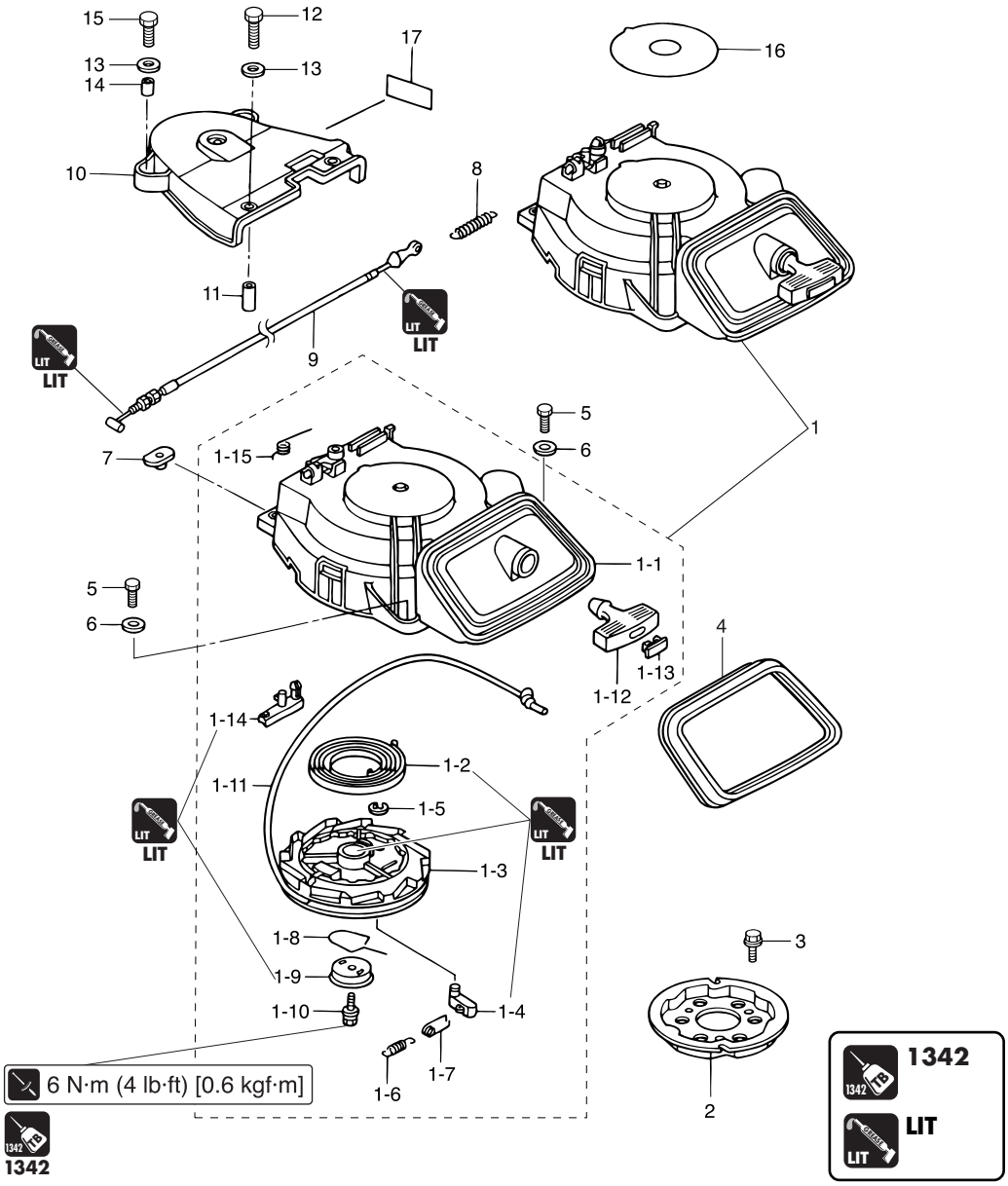

Ref. No.	Description	Q'ty	Remarks
1	Recoil Starter	1	
1-1	Starter Case	1	
1-2	Starter Spring	1	
1-3	Reel	1	
1-4	Ratchet	1	
1-5	E-Ring	1	
1-6	Return Spring	1	
1-7	Ratchet Guide	1	
1-8	Friction Spring	1	
1-9	Friction Plate	1	
1-10	Starter Shaft Bolt	1	
1-11	Starter Rope	1	ø5-L=1800
1-12	Starter Handle	1	
1-13	Starter Handle Cap	1	
1-14	Starter Lock	1	
1-15	Starter Lock Spring	1	
2	Starter Pulley	1	
3	Bolt	3	M6 L=16mm
4	Starter Seal	1	
5	Bolt	3	M6 L=20mm
6	Washer, 6.5-16-1.5	3	
7	Nut	2	
8	Starter Lock Cam Spring	1	
9	Starter Lock Cable	1	

Ref. No.	Description	Q'ty	Remarks
10	Belt Cover	1	
11	Collar, 6.2-9-12.3	2	
12	Bolt	2	M6 L=25mm
13	Washer, 6.5-16-1.5	4	
14	Collar, 6.2-9-7.4	2	
15	Bolt	2	M6 L=20mm
16	Caution Decal "B"	1	
17	Spark Plug Decal (with Resistance)	1	

Magneto & ECU

P/L Fig. 8

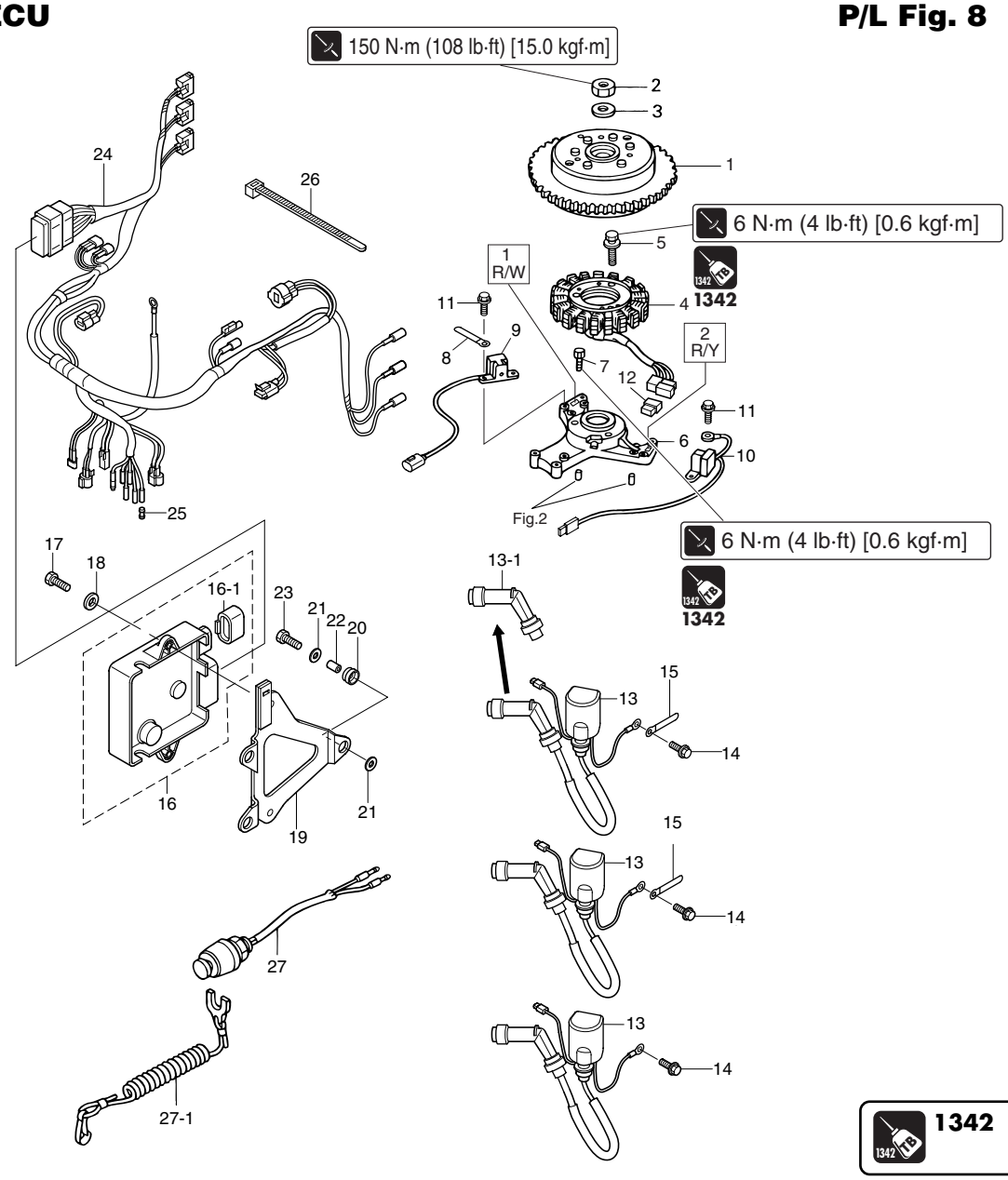

Ref. No.	Description	Q'ty	Remarks
1	Flywheel Cup	1	with FF 90 Ring Gear
2	Nut, M18-P1.5	1	
3	Washer, 19-34-3	1	
4	Alternator	1	
5	Bolt	3	M6 L=25mm
6	Coil Bracket	1	
7	Bolt	3	M6 L=30mm
8	Clamp, 6.5-47.5P	1	
9	Pulser Coil # 1	1	
10	Pulser Coil # 2	1	
11	Bolt	4	M5 L=12mm
12	Plug (Alternator Coupler)	1	Recoil Start Model
13	Ignition Coil	3	
13-1	Plug Cap (Resistance)	3	
14	Bolt	3	M6 L=20mm
15	Clamp, 6.5-47.5P	2	
16	ECU, 30	1	
	ECU, 30	1	for EU
	ECU, 25	1	
	ECU, 25	1	for EU
16-1	Plug (ECU)	1	
17	Bolt	2	M6 L=16mm
18	Washer, 6-16-1.5	2	
19	ECU Bracket	1	

Ref. No.	Description	Q'ty	Remarks
20	Rubber Mount	3	
21	Washer	6	
22	Collar, 6.2-9-7.4	3	
23	Bolt	3	M6 L=20mm
24	ECU Cord	1	※
	ECU Cord	1	▲
25	Cable Terminal Plug	3	※
26	Lead Wire Band, L=150	4	
27	Stop Watch	1	
27-1	Stop Switch Lanyard	1	

※ Tiller Handle Model

▲ Remote Control Model

Electric Parts

P/L Fig. 9

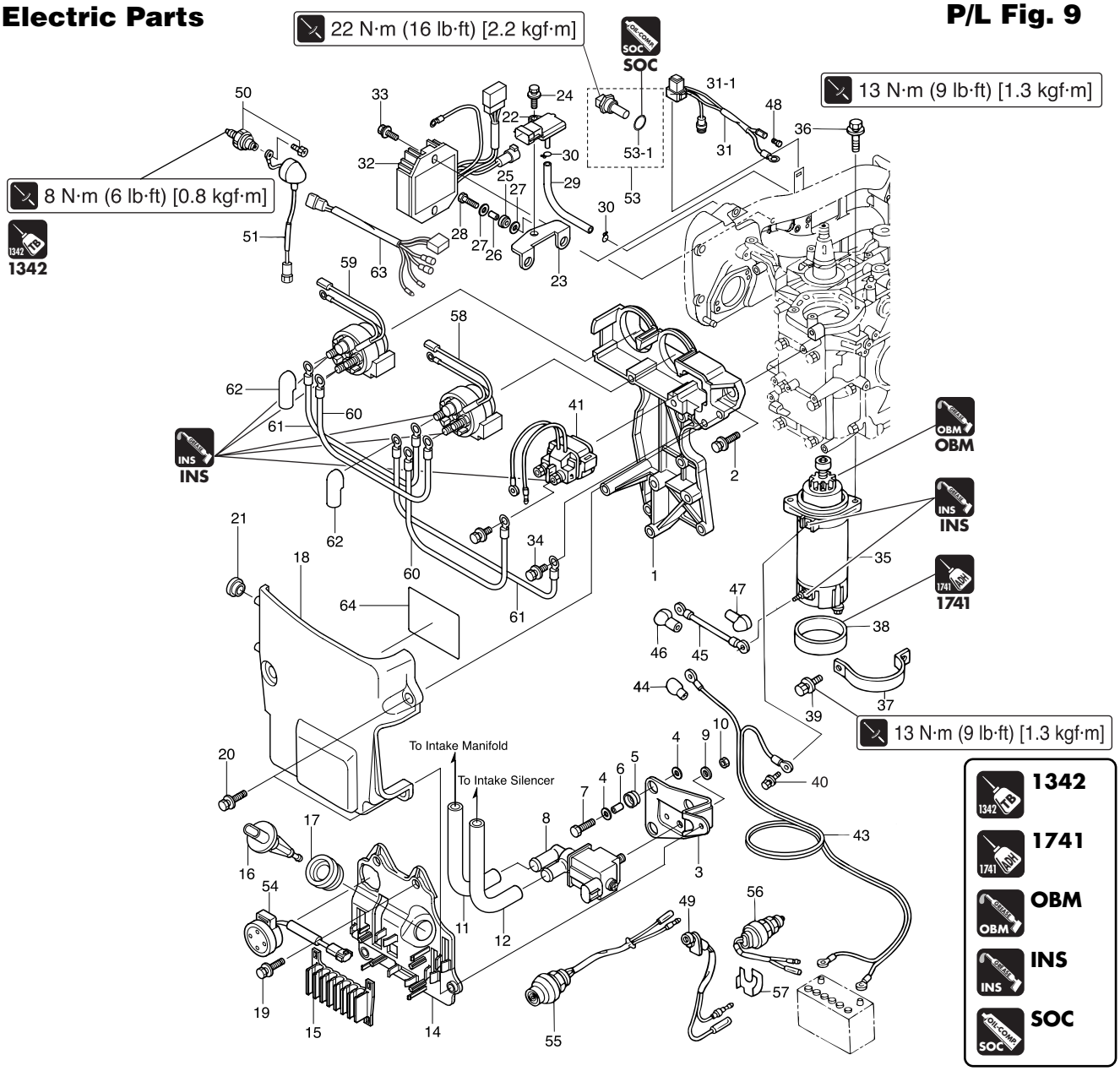

Ref. No.	Description	Q'ty	Remarks
1	Electric Bracket	1	
2	Bolt	5	M6 L=25mm
3	Plate	1	
4	Washer, 6-16-1.5	6	
5	Rubber Mount	3	
6	Collar, 6.2-9-7.4	3	
7	Bolt	3	M6 L=20mm
8	ISC Valve	1	
9	Washer	1	
10	Nut	1	
11	Fuel Hose	1	ISC Valve to Intake Manifold
12	Fuel Hose	1	Intake Silencer to ISC Valve
14	Cord Holder	1	
15	Holder	1	
16	Mat Sensor	1	
17	Mat Sensor Grommet	1	
18	Electric Bracket Cover	1	
19	Bolt	3	M6 L=25mm
20	Bolt	2	M6 L=20mm
21	Grommet, 17-2.7	1	
22	Map Sensor	1	
23	Map Sensor Plate	1	
24	Bolt	1	M6 L=16mm
25	Rubber Mount	2	

Ref. No.	Description	Q'ty	Remarks
26	Collar, 6.2-9-7.4	2	
27	Washer, 6-16-1.5	4	
28	Bolt	2	M6 L=20mm
29	Hose, L=110	1	Map Sensor to I/Manifold
30	Clip, ø7	2	
31	Fuse Cable	1	※
31-1	Fuse (20A)	2	※
32	Rectifier	1	※
33	Bolt	2	※ M6 L=25mm
34	Bolt	1	※ M6 L=12mm
35	Starter Motor	1	※
36	Bolt	2	※ M8 L=30mm
37	Starter Motor Bank	1	※
38	Starter Motor Damper	1	※
39	Bolt	2	※ M8 L=20mm
40	Bolt	1	※ M6 L=12mm
41	Starter Solenoid	1	※ with two Bolts
43	Battery Cable	1	※ L=2500
44	Terminal Cap	1	※
45	Starter Cable	1	※ L=270
46	Terminal Cap	1	※ Starter Solenoid (Red)
47	Terminal Cap	1	※ Starter Motor (Red)
48	Cable Terminal Plug	1	※
49	Warning Lamp	1	

※ Electric Start Model

Electric Parts

P/L Fig. 9

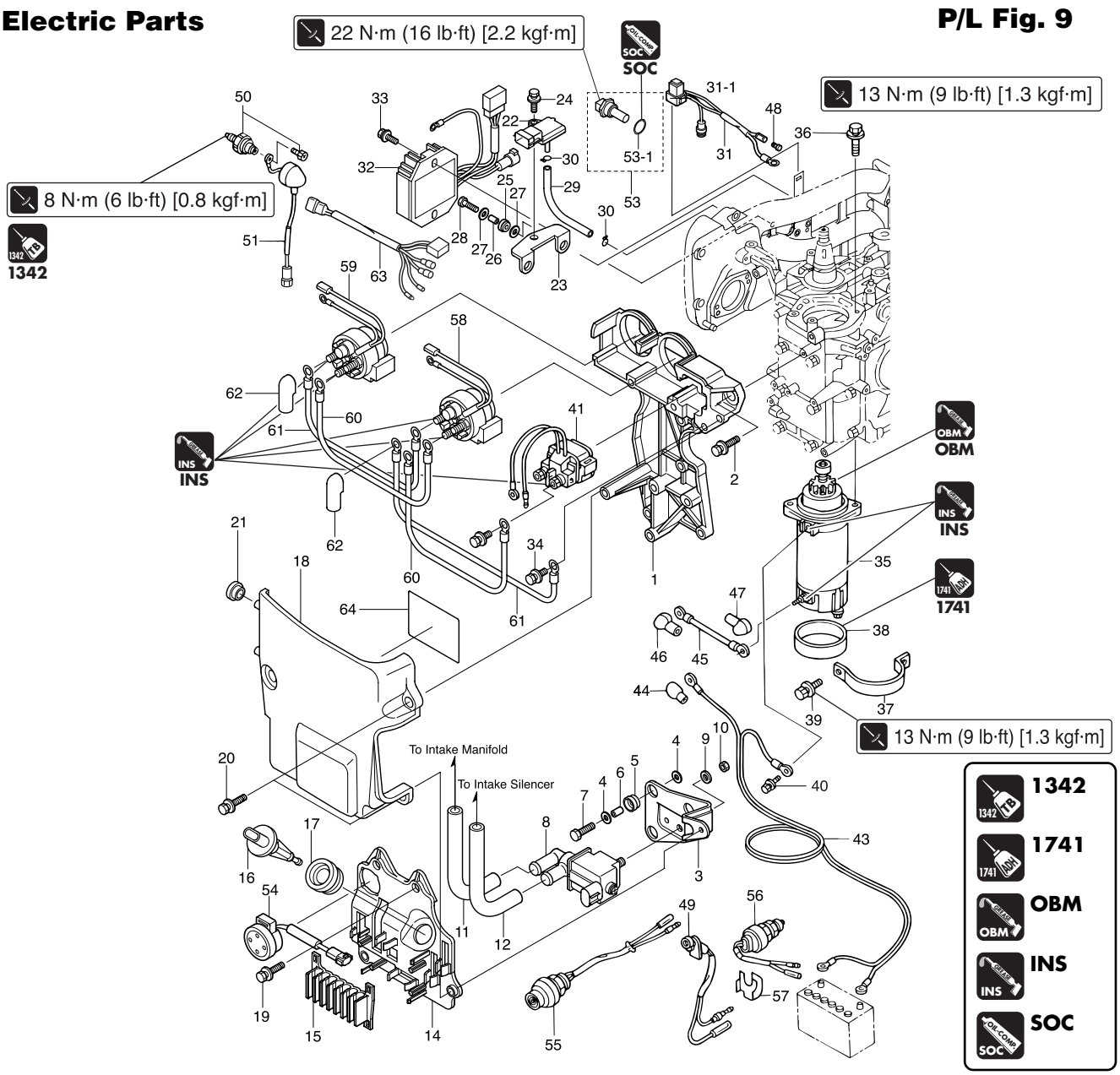

Ref. No.	Description	Q'ty	Remarks
50	Oil Pressure Switch	1	
51	Pressure Switch Lead Cable	1	L=170, with Grommet
53	Water Temperature Sensor	1	
53-1	O Ring, 2-10	1	**Do not reuse.**
54	Over-Heat Buzzer	1	●
55	Main Switch	1	▲
56	Neutral Swtich	1	▲
57	Neutral Switch Actuator	1	▲
58	PTT Solenoid Switch A	1	■ for tilt up
59	PTT Solenoid Switch B	1	■ for tilt down
60	Solenoid Switch cord "B"	2	■ L=150, Red (+)
61	Solenoid Switch cord "B"	2	■ L=130, Black (−)
62	Terminal Cap	2	■
63	PTT Extension Cord	1	■
64	Wiring Diagram Decal	1	

● Tiller Handle Model
▲ Electric Start Model with Tiller Handle
■ PTT Model

Fuel Pump, Fuel Rail, Vapor Separator

P/L Fig. 5

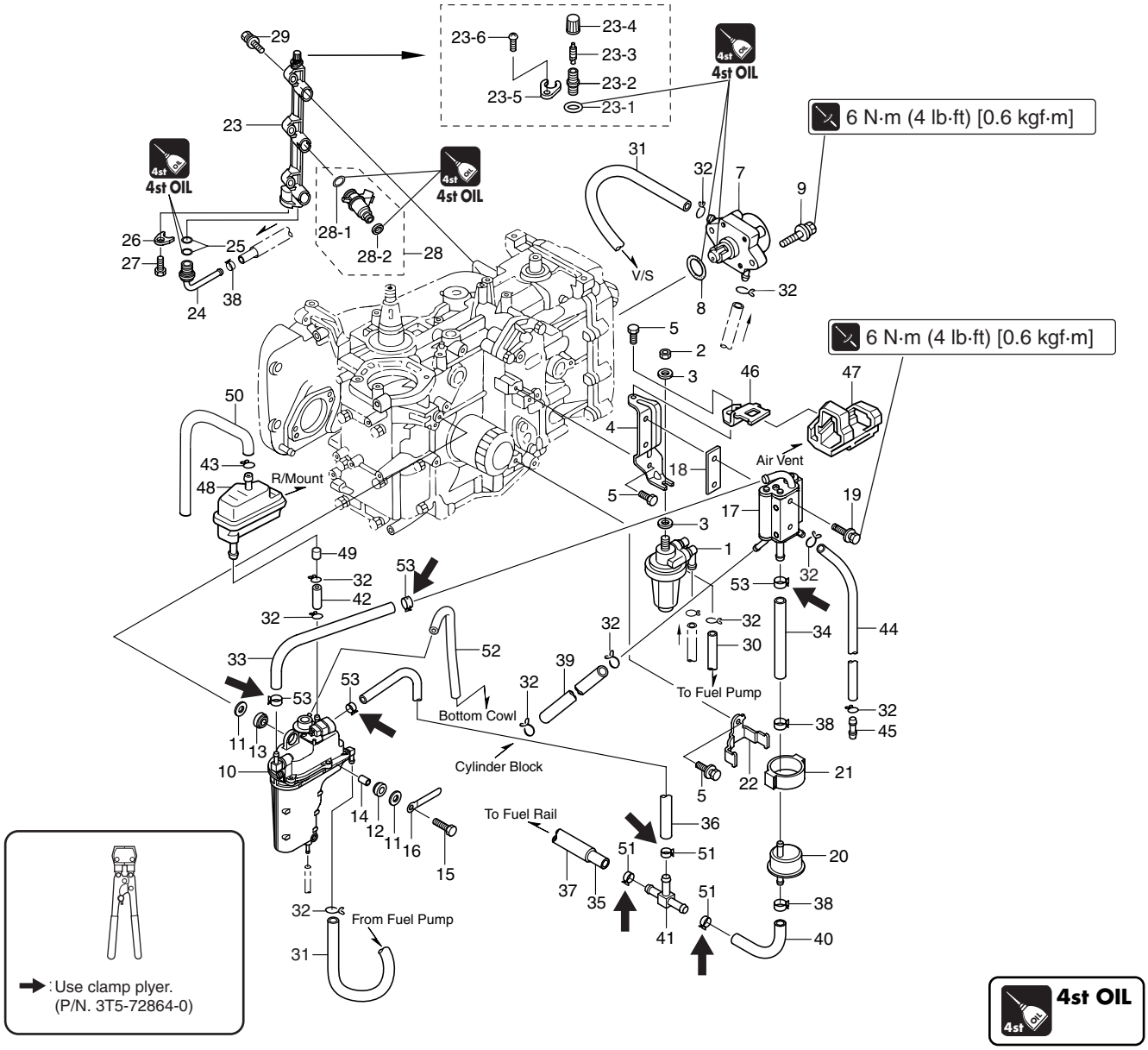

Ref. No.	Description	Q'ty	Remarks
1	Fuel Filter	1	
2	Nut	1	
3	Washer	2	
4	Plate	1	
5	Bolt	3	M6 L=16mm
7	Fuel Pump	1	
8	O Ring, 3.5-25.7	1	Do not reuse.
9	Bolt	2	M6 L=25mm
10	Vapor Separator	1	
11	Washer, 6.5-21-1	6	
12	Rubber Mount, 8.5-14-2.5	3	
13	Rubber Mount, 8.5-14-2.5	3	
14	Spacer, 6.2-9-15.7	3	
15	Bolt	3	M6 L=30mm
16	Clamp, 6.5-87P	1	
17	Fuel Cooler	1	
18	Fuel Cooler Gasket	1	
19	Bolt	2	M6 L=35mm
20	High Pressure Fuel Filter	1	Replace every 200 hours or two years.
21	Fuel Filter Rubber Mount	1	
22	Fuel Filter Band	1	
23	Fuel Rail	1	
23-1	O Ring, 1.9-4.8	1	Do not reuse.
23-2	Joint	1	

Ref. No.	Description	Q'ty	Remarks
23-3	Valve Ass'y	1	
23-4	Cap	1	
23-5	Plate	1	
23-6	Screw	1	M4 L=10mm
24	Nipple	1	
25	O Ring, 1.9-9.8	2	Do not reuse.
26	Holding Plate	1	
27	Bolt	1	M6 L=16mm
28	Fuel Injector	3	
28-1	O Ring, 3.6-6.5	3	Do not reuse.
28-2	O Ring	3	Do not reuse.
29	Bolt	3	M6 L=25mm
30	Rubber Hose, L=370	1	F/Filter to F/Pump
31	Rubber Hose, L=600	1	F/Pump to Vapor Separator
32	Clip, ø10	10	
33	Fuel Hose	1	Vapor Separator to F/Cooler
34	Fuel Hose	1	F/Cooler to High Pressure F/Filter
35	Fuel Hose	1	T Nipple to Fuel Rail
36	Fuel Hose	1	Vapor Separator to T Nipple
37	Hose Protector	1	L=240
38	Clip, ø13.5	3	
39	Rubber Hose	1	Cylinder to F/Cooler
40	Fuel Hose, L=600	1	High Pressure F/Filter to T Nipple
41	T Nipple	1	

Fuel Pump, Fuel Rail, Vapor Separator P/L Fig. 5

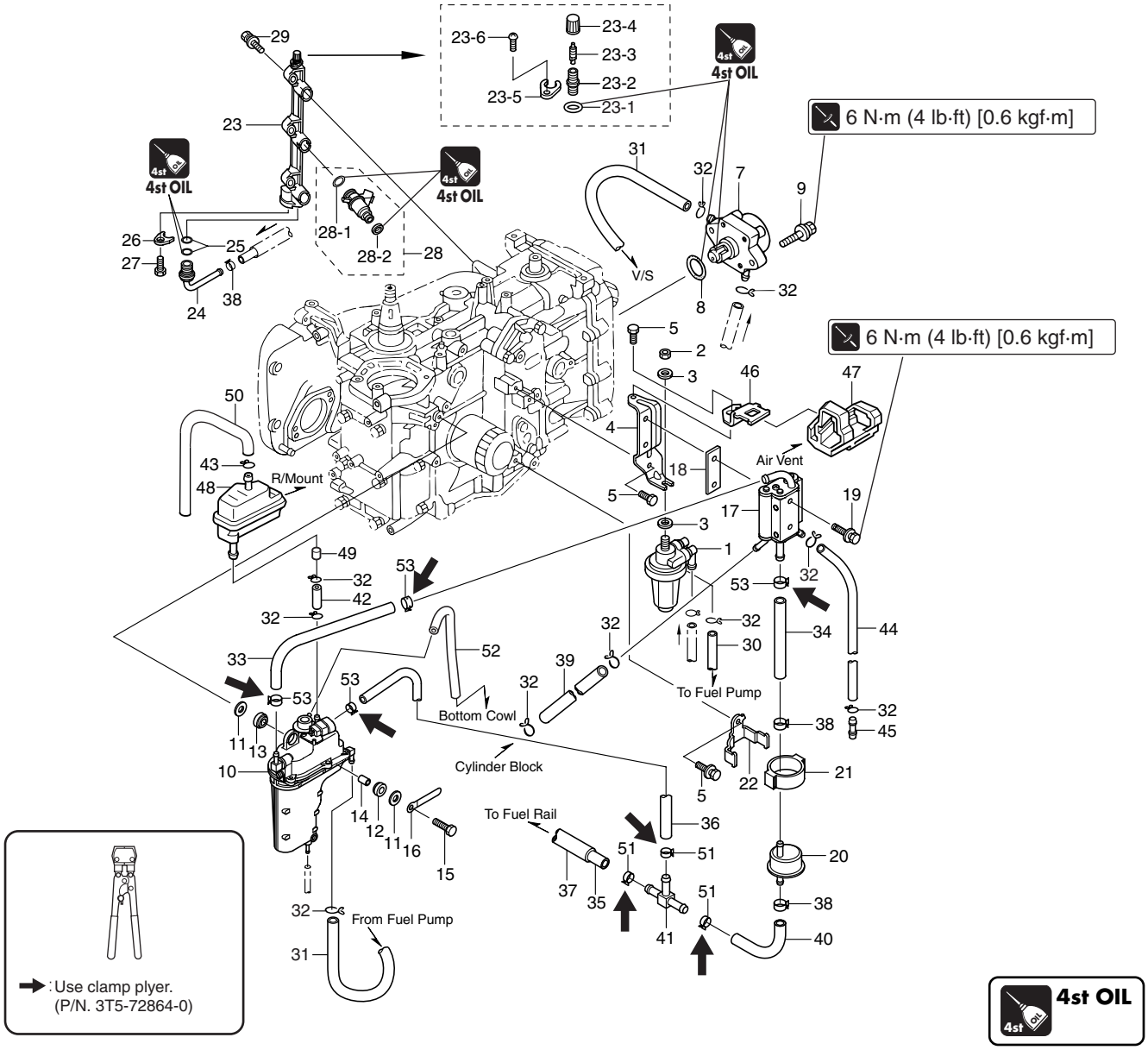

Ref. No.	Description	Q'ty	Remarks
42	Rubber Hose	1	Air Vent to Vapor Separator
43	Clip, ø7	5	
44	Rubber Hose, L=600	1	Fuel Cooler to Water Nipple (Cooling Water Check Port)+
45	Water Nipple	1	Bottom Cowl
46	Air Vent Stay	1	
47	Rubber Mount (Air Vent)	1	
48	Air Vent Ass'y	1	
49	Orifice	1	
50	Rubber Hose	1	Air Vent to Bottom Cowl
51	Clamp	3	
52	Rubber Hose, LL=540	1	Vapor Separator to Bottom Cowl
53	Clamp, 16.8	4	**Do not reuse.**

Fuel Pump, Fuel Rail, Vapor Separator

P/L Fig. 5

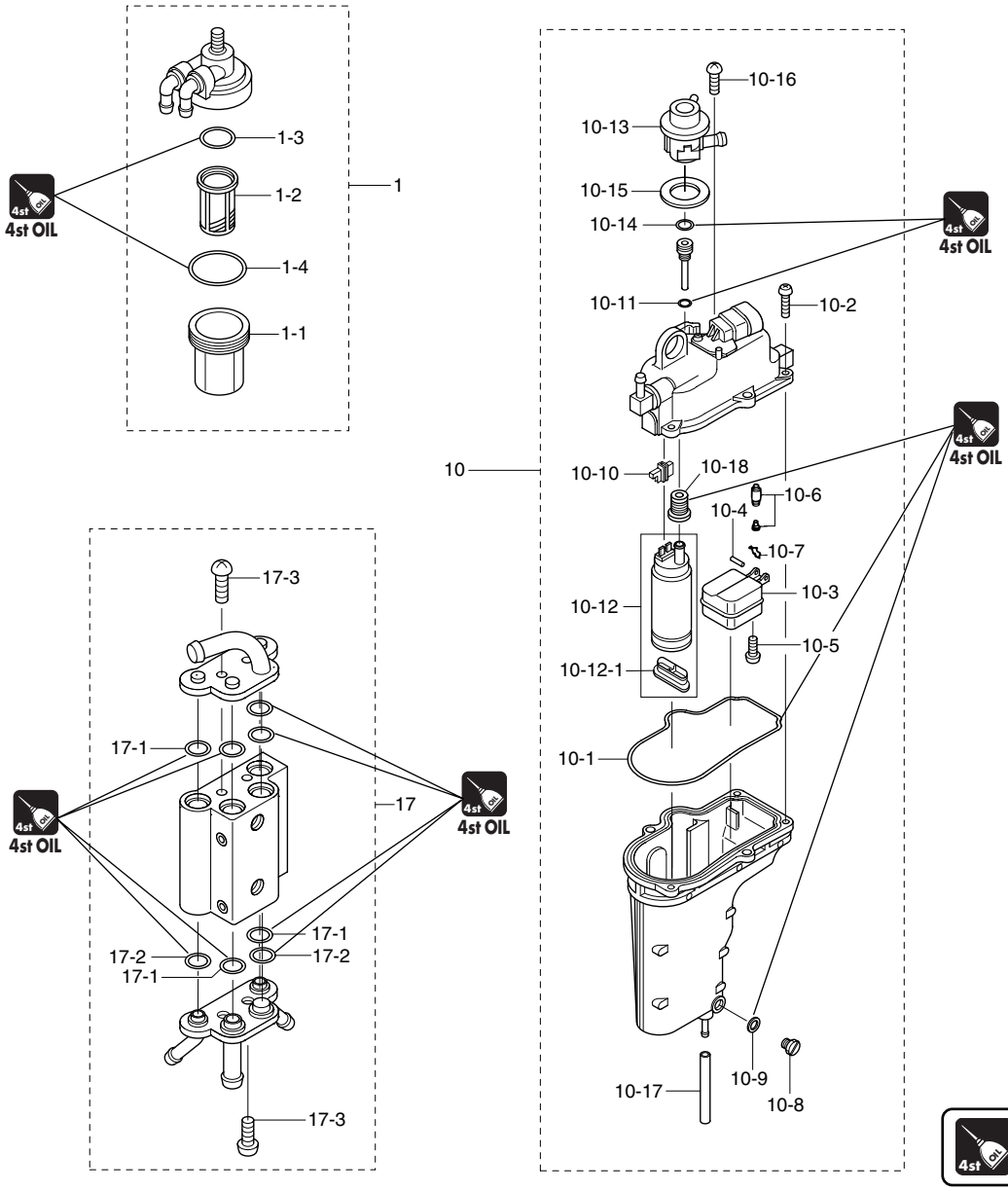

4st OIL

Ref. No.	Description	Q'ty	Remarks
1	Fuel Filter	1	
1-1	Cup	1	
1-2	Filter	1	
1-3	O Ring	1	Do not reuse.
1-4	O Ring A	1	Do not reuse.
10	Vapor Separator	1	
10-1	O Ring	1	Do not reuse.
10-2	Screw	5	M4 L=16mm
10-3	Float	1	
10-4	Float Arm Pin	1	
10-5	Screw	1	M4 L=8mm
10-6	Float Valve	1	with Needle Valve
10-7	Clip	1	
10-8	Drain Screw	1	
10-9	Drain Screw O Ring	1	Do not reuse.
10-10	Terminal Holder	1	
10-11	O Ring	1	Do not reuse.
10-12	Fuel Feed Pump	1	
10-12-1	Filter	1	
10-13	Fuel Regulator	1	
10-14	O Ring	1	Do not reuse.
10-15	Grommet	1	
10-16	Screw	2	
10-17	Rubber Hose	1	for draining

Ref. No.	Description	Q'ty	Remarks
10-18	Grommet	1	
17	Fuel Cooler	1	
17-1	O Ring, 1.9-7.8	6	Do not reuse.
17-2	O Ring, 1.9-6.8	2	Do not reuse.
17-3	Screw	4	M4 L=10mm

Intake Manifold

P/L Fig. 4

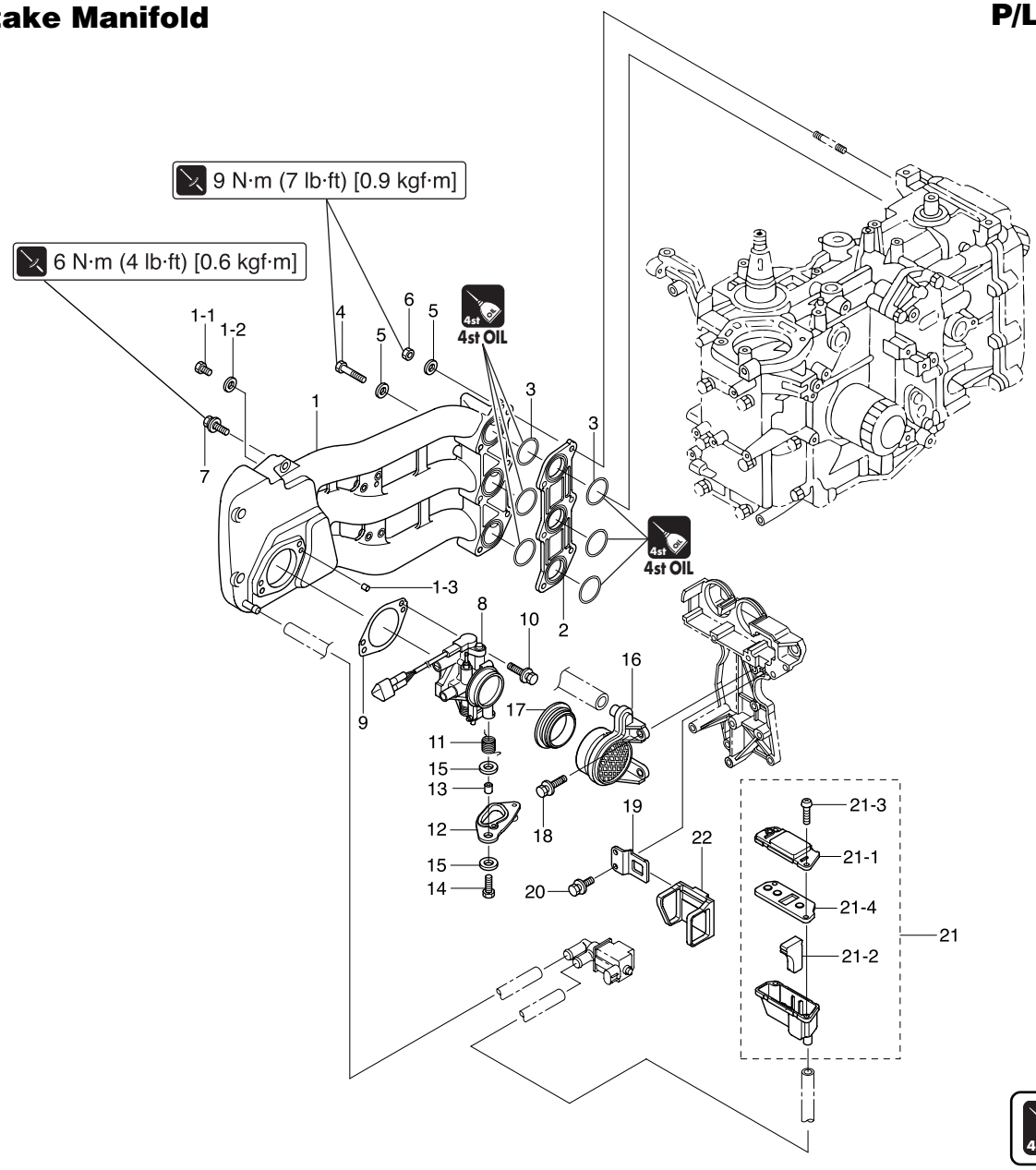

4st OIL

Ref. No.	Description	Q'ty	Remarks
1	Intake Manifold	1	
1-1	Bolt, 5-10	1	
1-2	Washer, 5.3-12-1	1	
1-3	Dowel Pin, 6-12	2	
2	Insulator	1	
3	O Ring, 1.9-31.2	6	Do not reuse.
4	Bolt	3	M6 L=35mm
5	Washer	6	
6	Nut	3	
7	Bolt	3	M6 L=25mm
8	Throttle Body Ass'y	1	30PS, with TPS
	Throttle Body Ass'y	1	25PS, with TPS
9	Throttle Body Gasket	1	Do not reuse.
10	Bolt	2	M6 L=25mm
11	Spring	1	
12	Throttle Cam	1	30PS (Black)
	Throttle Cam	1	25PS (White)
13	Collar, 6.2-9-9.3	1	
14	Bolt	1	M6 L=25mm
15	Washer, 6.5-21-1	2	
16	Intake Silencer Ass'y	1	for Throttle Body
17	Gasket	1	
18	Bolt	2	M6 L=20mm
19	Stay	1	

Ref. No.	Description	Q'ty	Remarks
20	Bolt	2	M6 L=12mm
21	Intake Silencer Ass'y	1	for ISC Valve
21-1	Intake Silencer Cover	1	
21-2	Air Filter	1	
21-3	Tapping Screw, 5-16	2	
21-4	Intake Silencer Gasket	1	Do not reuse.
22	Grommet	1	

Cam Shaft & Oil Pump

P/L Fig. 6

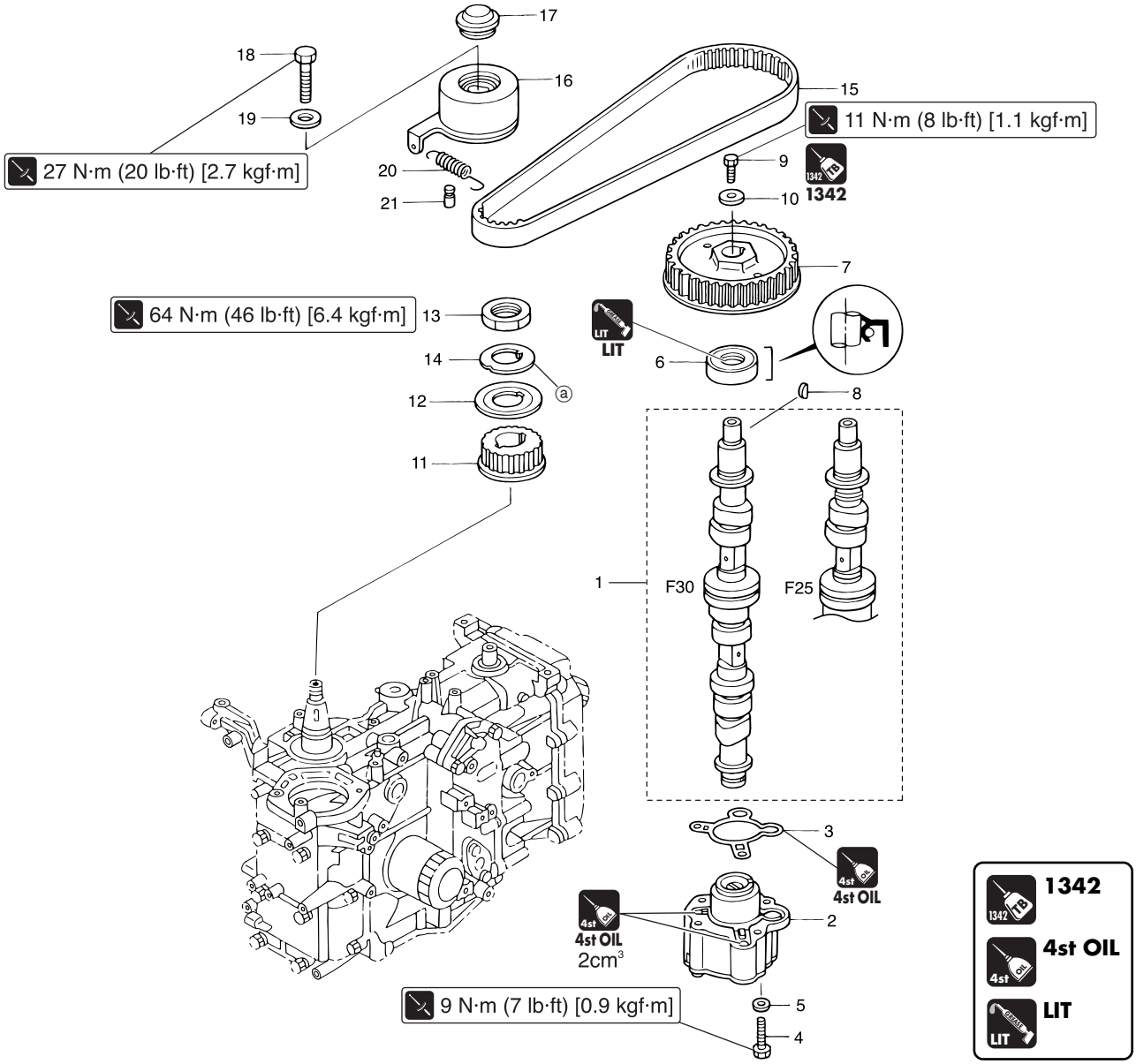

Ref. No.	Description	Q'ty	Remarks
1	Cam Shaft	1	30PS, with Pin
	Cam Shaft	1	25PS, with Pin
2	Oil Pump	1	
3	Oil Pump O-Ring (Outer)	1	**Do not reuse.**
4	Bolt	3	M6 L=45mm
5	Washer	3	
6	Oil Seal, 18-35-8	1	
7	Cam Shaft Pulley	1	Black
8	Key	1	
9	Bolt, 6-20 Pre-coated	1	M6 L=20
10	Washer, 6.5-19-3.2	1	
11	Timing Pulley	1	
12	Belt Guide	1	
13	Nut M32-P1.0	1	Width between two sides : 40mm
14	Lock Washer	1	
15	Timing Belt	1	
16	Timing Belt Tensioner	1	
17	Tensioner Cover	1	
18	Bolt	1	M10 L=40mm
19	Washer	1	
20	Tensioner Spring	1	
21	Tensioner Spring Hook	1	

Cylinder Head

P/L Fig. 1

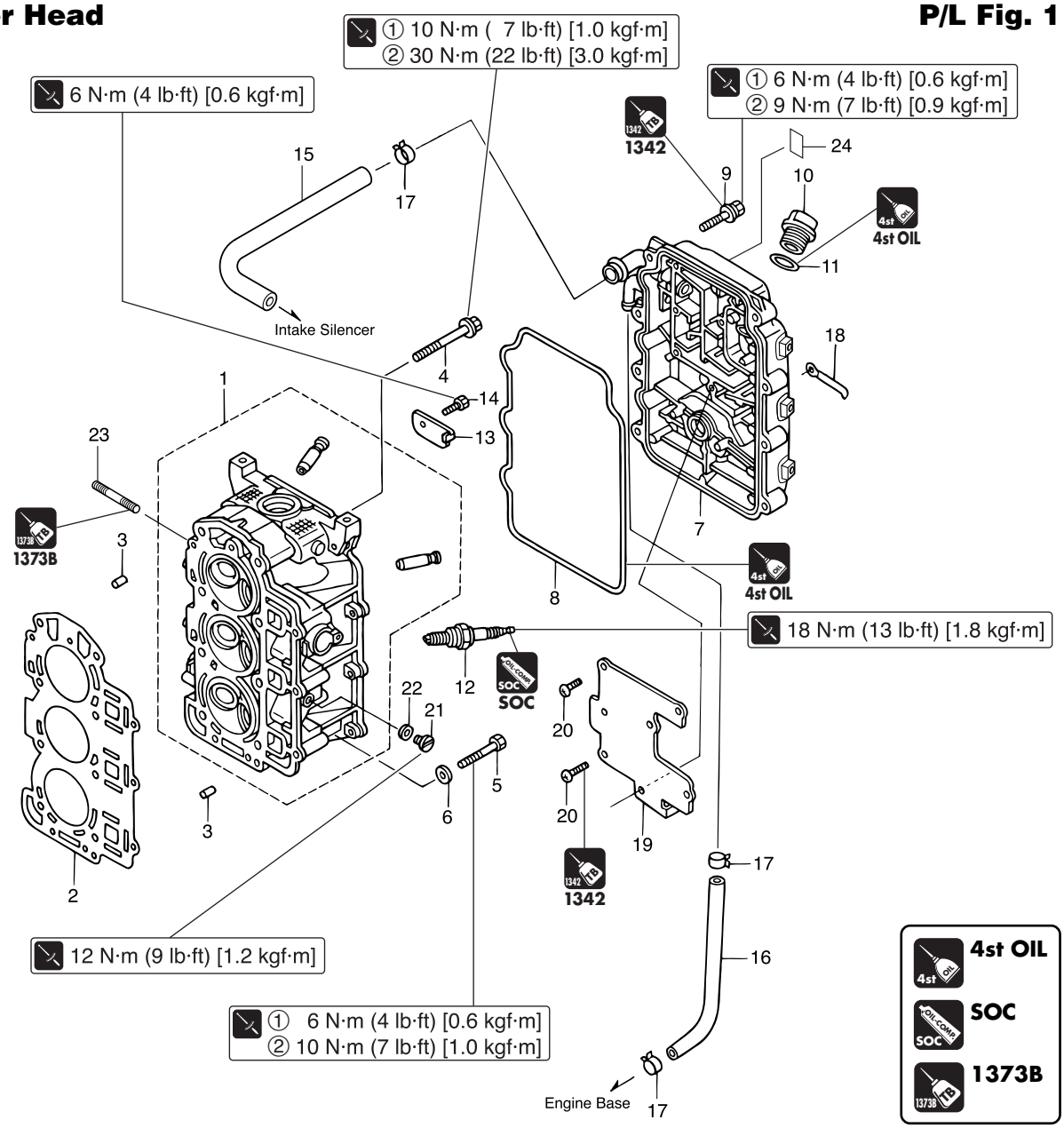

Ref. No.	Description	Q'ty	Remarks
1	Cylinder Head	1	
2	Cylinder Head Gasket	1	
3	Dowel Pin, 6-12	2	
4	Cylinder Head Bolt, 8-60	8	M8 L=60mm
5	Bolt, 6-53	3	M6 L=53mm
6	Washer	3	
7	Cylinder Head Cover	1	
8	Cylinder Head Cover Gasket	1	
9	Bolt	8	M6 L=30mm
10	Engine Oil Filler Cap	1	
11	O Ring, 3.21-4.4	1	**Do not reuse.**
12	Spark Plug, M12-P1.25	3	DCPR6E [NGK]
13	Cylinder Head Plate	1	
14	Bolt	1	M6 L=12mm
15	Breather Hose	1	C/head cover-I/silencer
16	Rubber Hose	1	L=290
17	Clip, ø15.5	3	
18	Clamp, 6.5-87P	2	
19	Breather Chamber Cover	1	
20	Screw	7	
21	Plug, M8	1	Water Plug
22	Gasket, 8.15-1	1	Water Plug
23	Stud Bolt	3	C/head-intake manifold
24	Engine Oil Decal	1	

Intake Valve & Exhaust Valve

P/L Fig. 7

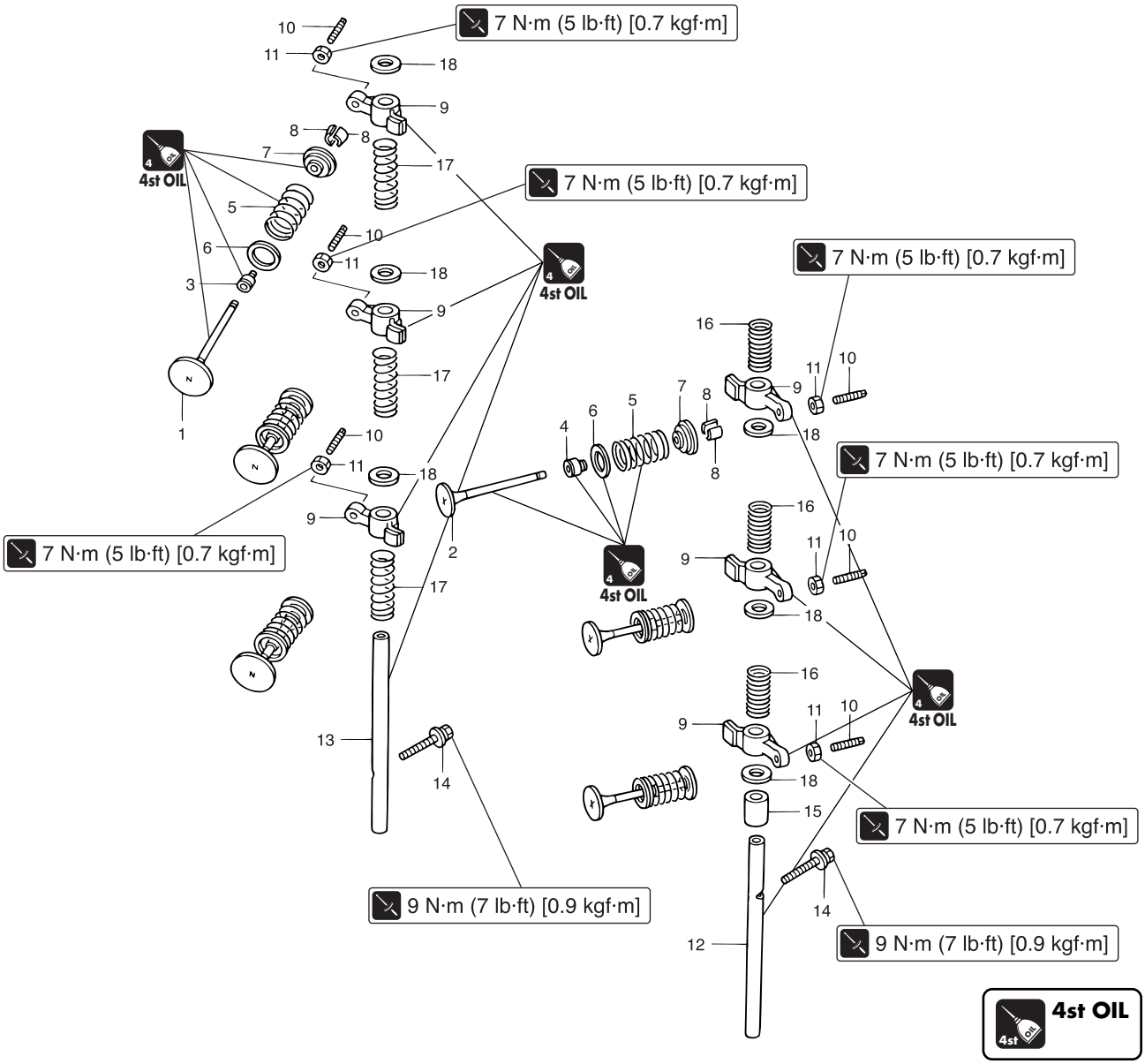

Ref. No.	Description	Q'ty	Remarks
1	Intake Valve	3	N mark : Valve Diameter 25mm
2	Exhaust Valve	3	X mark : Valve Diameter 24mm
3	Intake Valve Stem Seal	3	Black
4	Exhaust Valve Stem Seal	3	Green
5	Valve Spring	6	
6	Valve Spring Seat	6	
7	Retainer	6	
8	Cotter	12	
9	Rocker Arm	6	
10	Adjusting Screw, M6-P0.75	6	
11	Lock Nut, M6-P0.75	6	
12	Rocker Arm Shaft (Exhaust)	1	Threaded part downward, Bolt location (Upper)
13	Rocker Arm Shaft (Intake)	1	Threaded part downward, Bolt location (Lower)
14	Bolt	2	M6 L=35mm
15	Collar, 13.1-15.9-22.5	1	
16	Rocker Shaft Spring	3	L=30
17	Rocker Shaft Spring	3	L=51
18	Washer, 13.2-21.7-2	6	

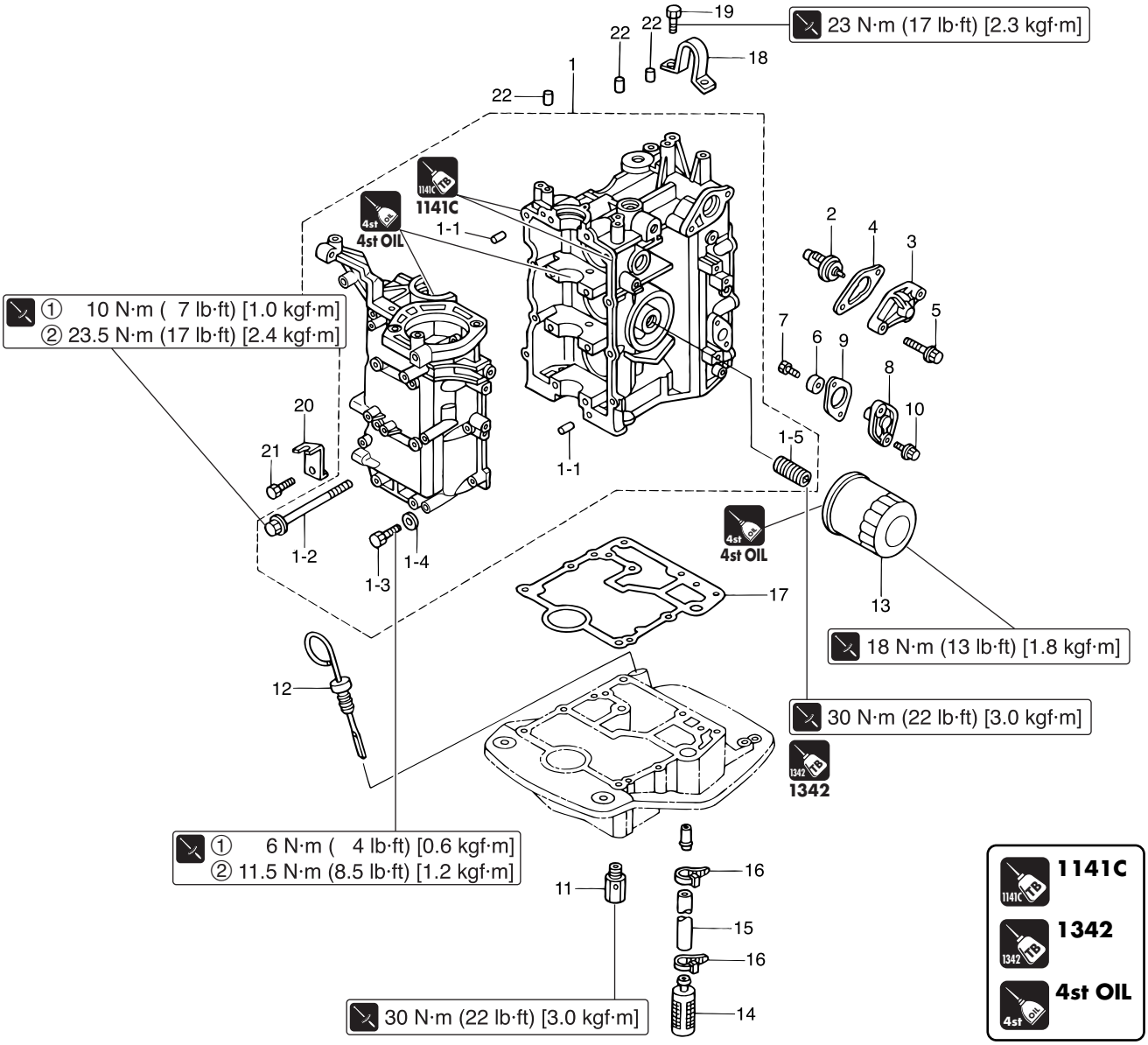

Ref. No.	Description	Q'ty	Remarks
1	Cylinder-Crank Case	1	
1-1	Dowel Pin, 6-12	2	
1-2	Bolt, 8-90	8	M8 L=90mm
1-3	Bolt	8	M6 L=40mm
1-4	Washer	8	
1-5	Oil Filter Bolt	1	
2	Thermostat	1	
3	Thermostat Cap	1	
4	Thermostat Cap Gasket	1	Do not reuse.
5	Bolt	2	M6 L=30mm
6	Anode	1	
7	Bolt	1	M6 L=16mm
8	Anode Cap	1	
9	Anode Cap Gasket	1	Do not reuse.
10	Bolt	2	M6 L=20mm
11	Plunger, M16P1.5	1	
12	Oil Level Gauge	1	
13	Oil Filter	1	
14	Oil Strainer	1	
15	Hose	1	
16	Lead Wire Band, L= 150	2	
17	Engine Base Gasket	1	
18	Hanger	1	
19	Bolt	2	M8 L=20mm

Ref. No..	Description	Q'ty	Remarks
20	Starter Lock Cable Bracket	1	
21	Bolt	1	M6 L=12mm
22	Dowel Pin, 6-12	3	

Piston & Crankshaft

P/L Fig. 3

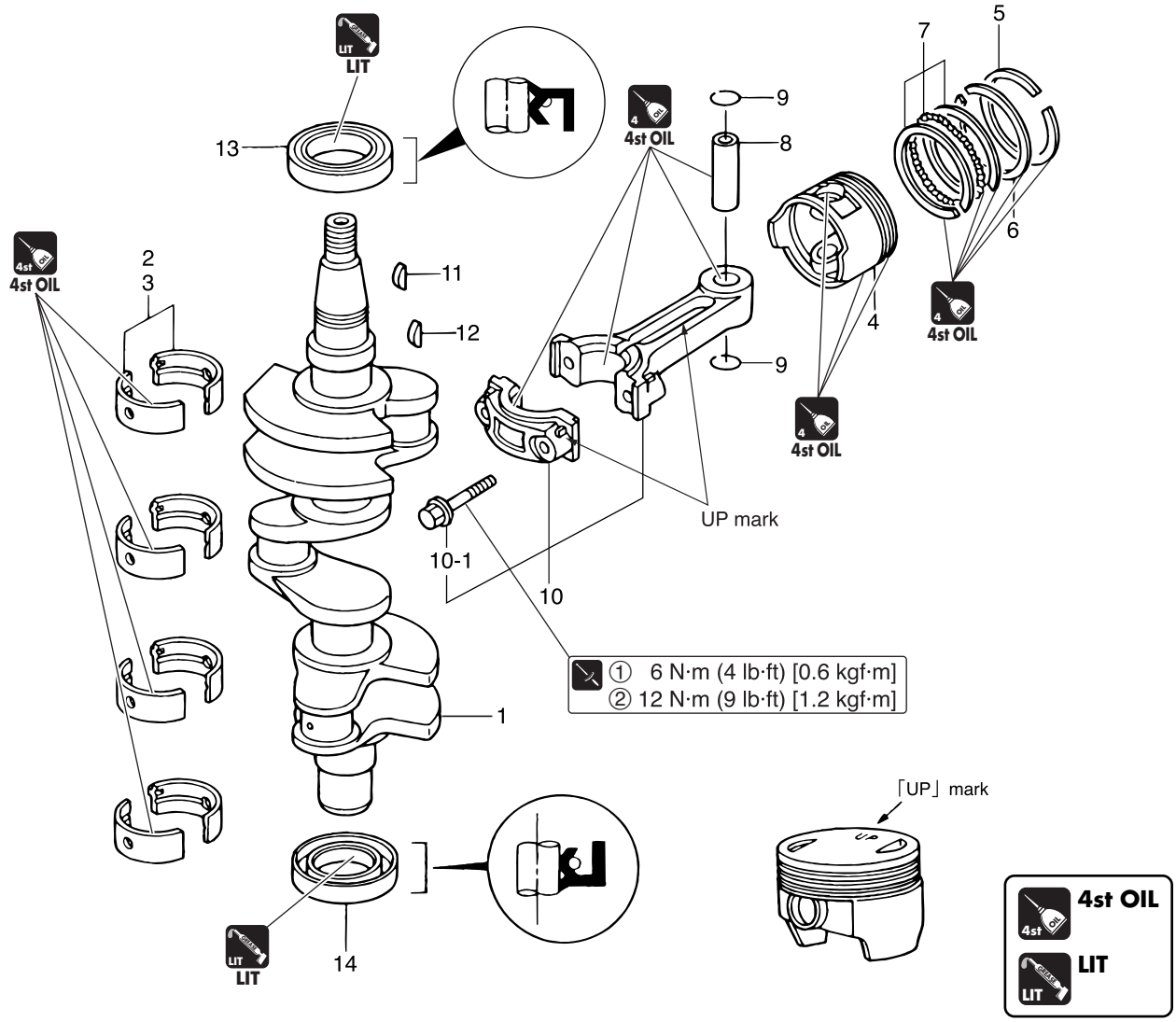

Ref. No.	Description	Q'ty	Remarks
1	Crankshaft Ass'y	1	
2	Metal (Red)	8	
3	Metal (Blue)	8	
4	Piston	3	
5	Piston Ring Tol	3	
6	Piston Ring 2nd	3	
7	Piston Ring Oil	3	
8	Piston Pin	3	
9	Piston Pin Clip	6	Do not reuse.
10	Connecting Rod	3	
10-1	Connecting Rod Bolt, M7-P1.0	6	
11	Magneto Key	1	
12	Timing Pulley Key	1	
13	Oil Seal, 38-50-8	1	Upper
14	Oil Seal, 35-50-8	1	Lower

Top Cowl

P/L Fig. 23

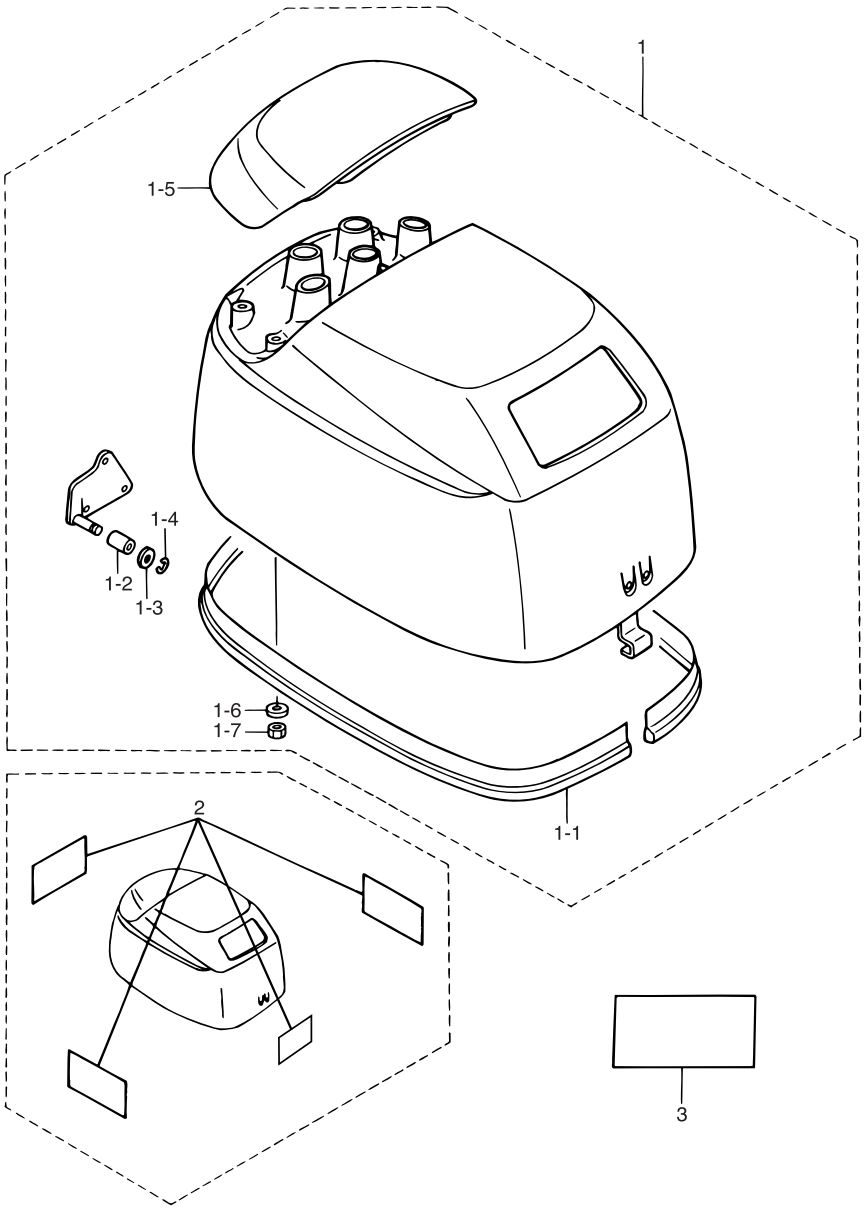

Ref. No.	Description	Q'ty	Remarks
1	Top Cowl	1	Motor Cover (Upper)
1-1	Top Cowl Seal	1	
1-2	Roller, 6.1-14.7-14	1	
1-3	Washer, 6-16-1.5	1	
1-4	E-Ring, d=5	1	
1-5	Tilt Handle	1	
1-6	Washer, 6-16-1.5	4	
1-7	Nut	4	
2	Decal Set	1	
3	Caution Decal "A"	1	

3. Inspection Items

1) Inspection of Compression Pressure

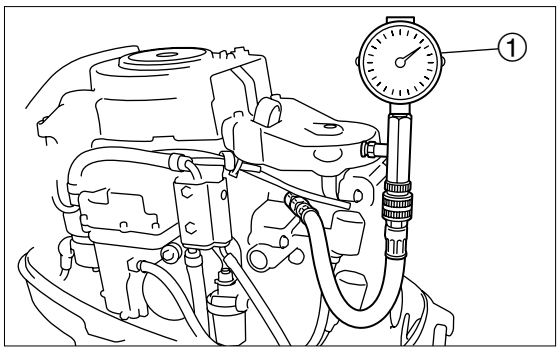

1. Run engine 5 minutes to warm up, and then stop.

2. Shift gear into neutral (N).

3. Remove lock plate from stop switch.

⚠ CAUTION

Remove lock plate from stop switch before measuring compression pressure. This will prevent engine from accidental starting.

4. Remove all plug caps and then all spark plugs.

⚠ CAUTION

Clean areas around spark plugs on the cylinder before removing spark plugs to prevent dirt from entering cylinder.

5. Install compression gauge to plug hole.

Compression Gauge ① :
P/N. 3AC-99030-0

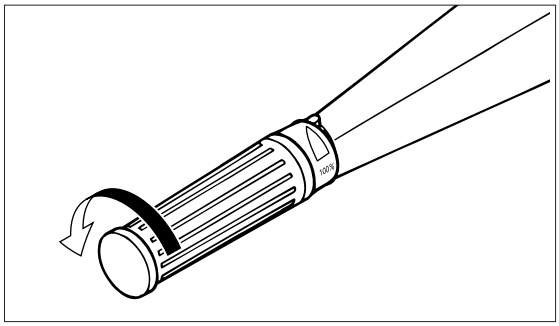

6. Fully open throttle, crank engine until compression gauge indication stabilizes, and then measure compression pressure.

Compression Pressure (Reference) :
1.13 MPa (164 PSI) [11.5 kgf/cm^2] ±10 %

Compression pressure is affected much by cranking speed, and normally changes approximately 10%.

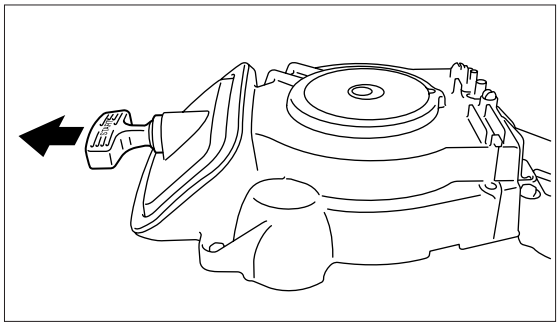

7. If compression pressure is below specified value or varies among cylinders, put small amount of engine oil into cylinders, and perform the test again.

- If compression pressure of a cylinder increases after the above measure, check pistons and piston rings of the cylinder for wear. Replace if necessary.
- If compression pressure does not increase after the above measure, check valve clearances, valves, valve seats, cylinder sleeves, cylinder head gaskets and cylinder head. Adjust or replace if necessary.

2) Inspection of Oil Pressure

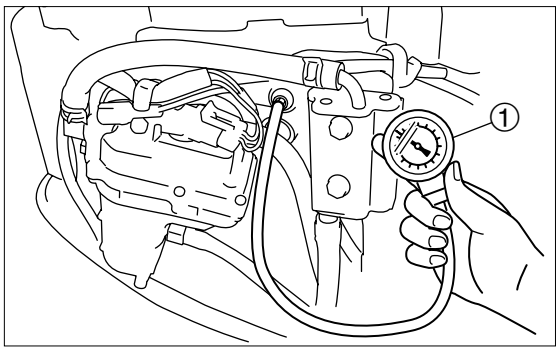

1. Spread rag below oil pressure switch.

2. Remove oil pressure switch and connect oil pressure gauge ① to switch hole.

   Use commercially available oil pressure gauge. Use the instrument applicable to 1 Mpa (142 PSI) [10 kgf/cm^2].

3. Start engine and run 5 minutes to warm up at idling revolution speed.

4. Measure hydraulic pressure. If the pressure is below specified value, check oil pump for oil leak, and oil strainer and plunger.

   Hydraulic Pressure (Reference) : Oil Temperature 60°(140°F)
   0.14 MPa (21 PSI) [1.5 kgf/cm^2] or higher at 850 r/min
   0.29 MPa (43 PSI) [3.0 kgf/cm^2] or higher at 5750 r/min

5

3) Inspection of Valve Clearance

1. Remove upper starter lock cable, and then recoil starter and belt cover.

2. Disconnect breather hoses ① (2).

3. Remove fuel pump ②.

4. Disconnect cooling water (fuel cooler) hoses (2).

5. Disconnect spark plug caps and ignition coils, and remove spark plugs and cylinder head cover ③.

> When removing or installing cylinder head cover, use 10mm ring wrench with large offset angle.

6. Rotate flywheel ④ clockwise to bring "●I" mark ⓐ of cam shaft pulley ⑤ to "▲" mark ⓑ of cylinder head.

> No.1 piston is to be at top dead center of compression stroke.

7. Check and adjust No. 1 cylinder's intake and exhaust valve clearances. Adjust gap if it is out of specified range.

> **Valve Clearance (when engine is cold)**
> (IN) Intake valve ⓓ : 0.15±0.02 mm (0.006±0.001 in)
> (EX) Exhaust valve ⓔ : 0.20±0.02 mm (0.008±0.001 in)

8. Rotate flywheel ④ clockwise to bring "Ⅲ" mark ⓒ of cam shaft pulley ⑤ to "▲" mark ⓑ of cylinder head.

9. Check and adjust No. 3 cylinder's intake and exhaust valve clearances. Adjust gap if it is out of specified range.

10. In a similar way, bring "Ⅱ" mark ⓓ of cam shaft pulley ⑤ to "▲" mark ⓑ and check and adjust No. 2 cylinder.

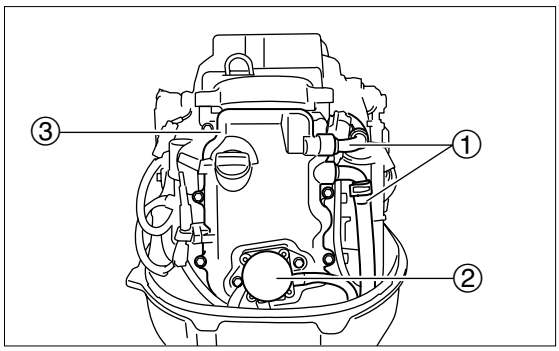

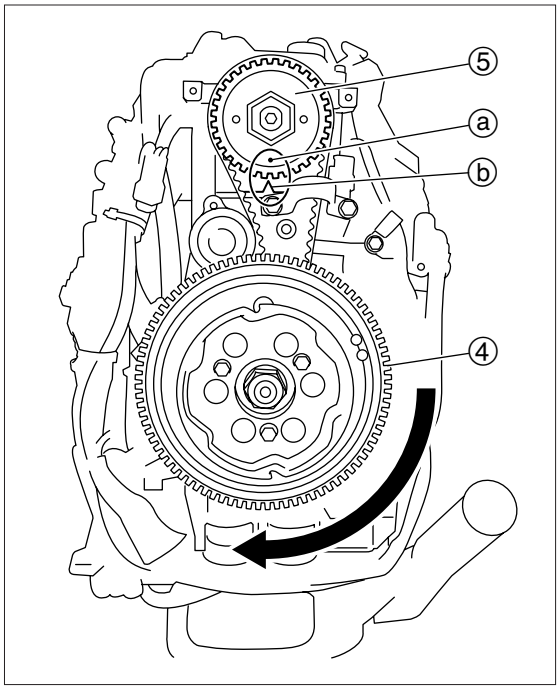

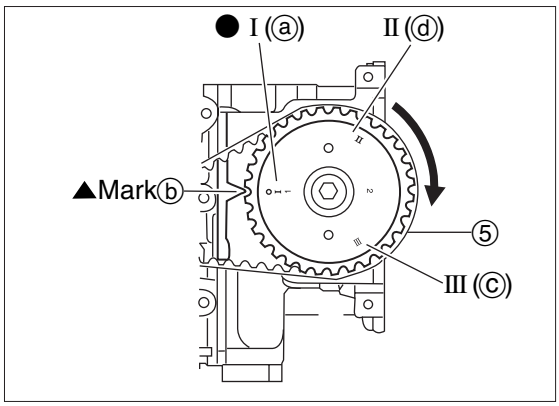

⑤ cam shaft pulley

11. Loosen rocker arm lock nut ⑥, and turn adjusting screw ⑦ to set valve clearance to specified value.

- Turning adjust screw ⑦ clockwise makes valve clearance smaller.
- Turning adjust screw ⑦ counterclockwise makes valve clearance larger.

Valve Clearance Driver ⑧ :
P/N. 3AC-99030-0
Torque Wrench ⑨ :
P/N. 3AC-99070-0
Thickness Gauge ⑩ :
Use commercially available item.

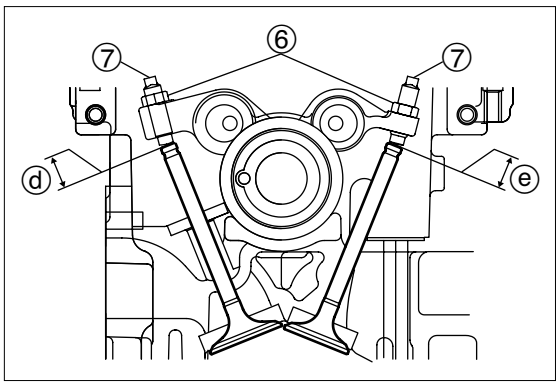

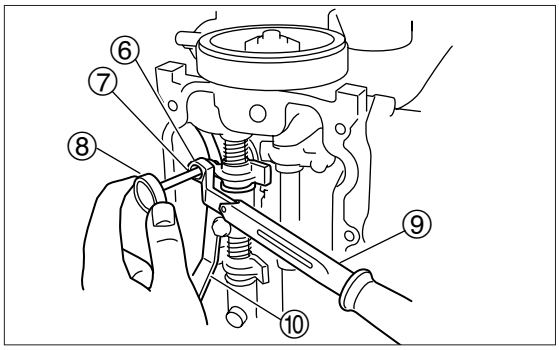

12. Tighten rocker arm lock nut ⑥ to specified torque, and check valve clearance again. Readjust if necessary.

Rocker Arm Lock Nut ⑤ :
7 N·m (5 lb·ft) [0.7 kgf·m]

Perform adjustment of valve clearances when engine is cold.

Valve Clearance (when engine is cold) :
(IN) Intake valve ⓓ : 0.15±0.02 mm (0.006±0.001 in)
(EX) Exhaust valve ⓔ : 0.20±0.02 mm (0.008±0.001 in)

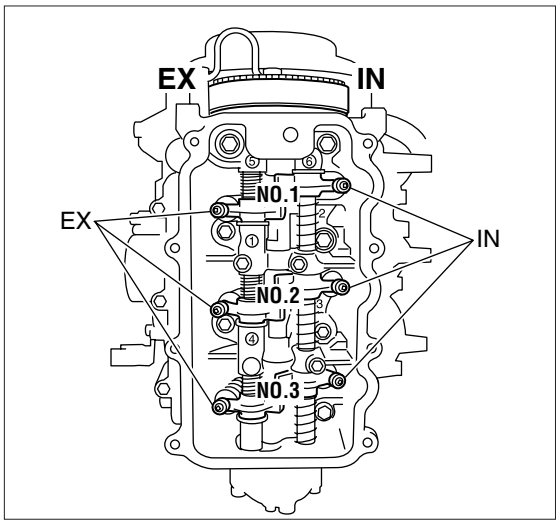

13. Install cylinder head cover, fuel pump, spark plugs, recoil starter and belt cover.

When removing or installing cylinder head cover, use 10mm ring wrench with large offset angle.

14. Reconnect spark plug caps and ignition coils.

15. Reconnect breather hoses (2) and cooling water (fuel cooler) hoses (2).

16. Reconnect upper starter lock cable.

5

4) Removing Power Unit

1. Disconnect upper and lower starter lock cables.

2. Remove recoil starter, belt cover and starter pulley.

3. Loosen flywheel nut.

Loosen flywheel nut before removing power unit to make the work easier.

A **Flywheel Holder :**
P/N. 3AC-99200-0
B **Flywheel puller kit :**
P/N. 3C7-72211-1

⚠ CAUTION

Apply forces to tools toward directions as shown, and perform work taking care not to allow flywheel holder to remove.

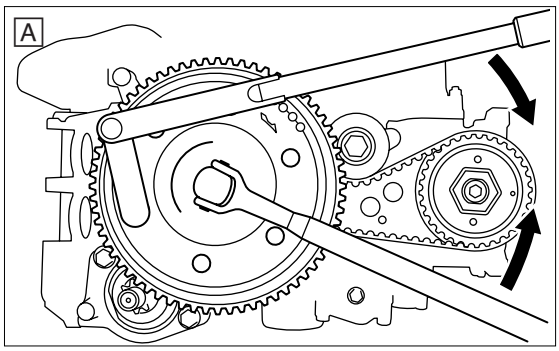

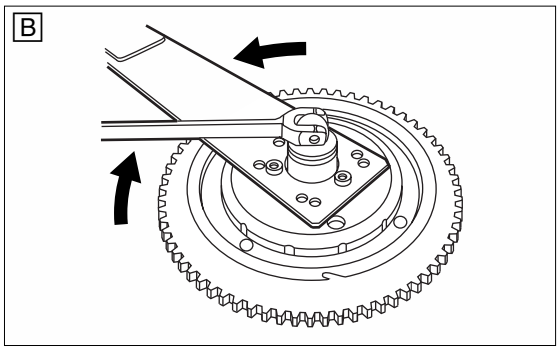

4. Disconnect battery cables ① (2) and PTT motor leads ② (2). (Electric start model and PTT model)

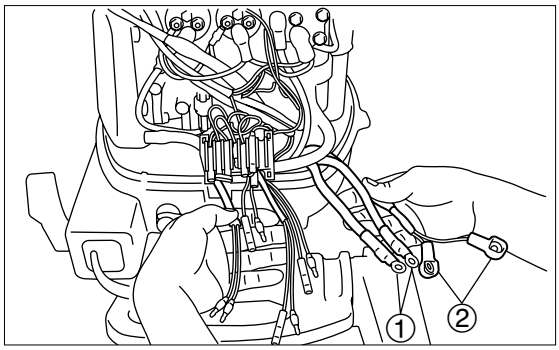

5. Disconnect warning lamp, starter switch and stop switch. (Tiller Handle Model)

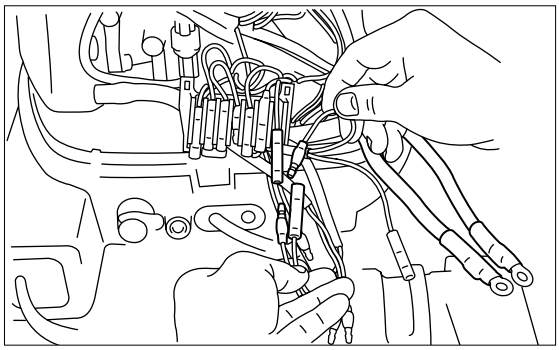

6. Disconnect remote control harness coupler ③ and connectors. (Remote Control Model)

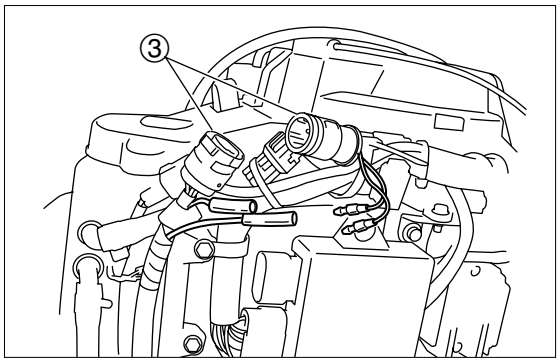

7. Disconnect PTT switch coupler ④ . (PTT Model)

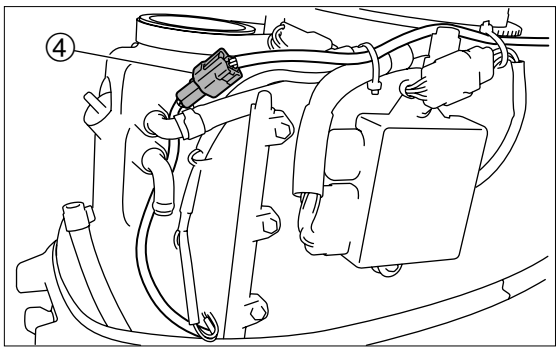

8. Disconnect throttle link rod ⑤.

9. Remove oil level gauge ⑥.

10. Disconnect lower breather hose ⑦.

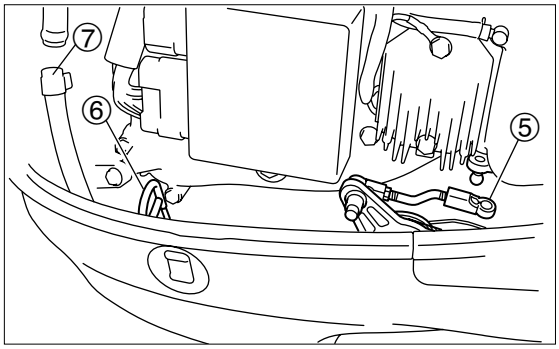

11. Disconnect cooling water (fuel cooler) hose ⑧ and fuel hose ⑨.

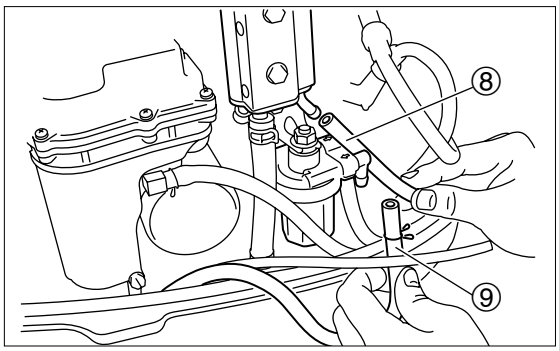

12. Remove apron ⑪ by removing bolts ⑩ (2).

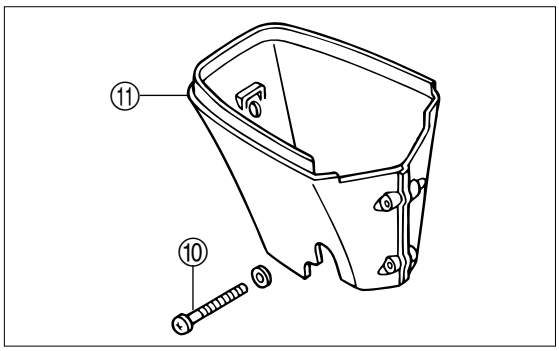

13. Remove power unit by removing bolts ⑫ (6) and then lifting it.

When lifting power unit, perform the work carefully, checking if wires and hoses are caught by other parts.

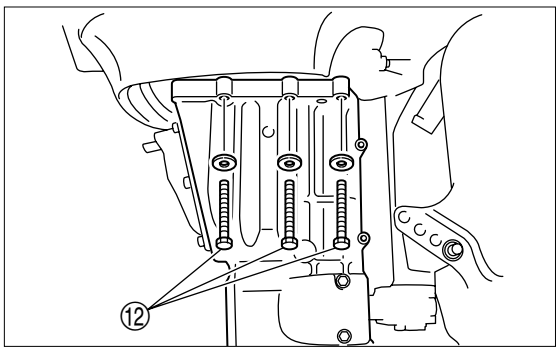

14. Remove flywheel and key.

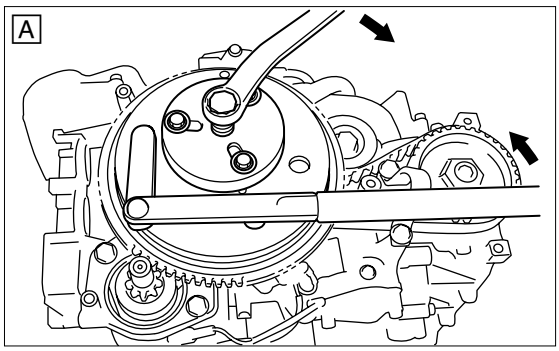

A **Flywheel Holder :**
P/N. 3AC-99200-0
A **Flywheel puller :**
Use puller contained in the following puller kit.
B **Flywheel puller kit :**
P/N. 3C7-72211-1

⚠ CAUTION

Apply forces to tools toward directions as shown, and perform work taking care not to allow flywheel holder to remove.

Screw puller onto crankshaft end until flywheel is disengaged from tapered section of crankshaft.

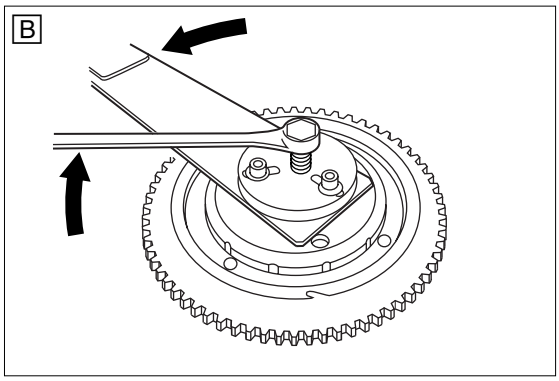

⚠ CAUTION

To prevent damages to engine and special tools, tighten flywheel puller set bolts evenly and keep flywheel puller parallel to flywheel while working.

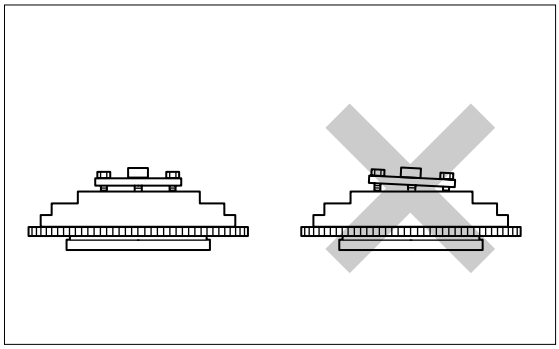

15. Disconnect alternator and pulser coil.

16. Remove bolts of alternator ⑬ and coil bracket ⑭, and remove alternator and coil bracket.

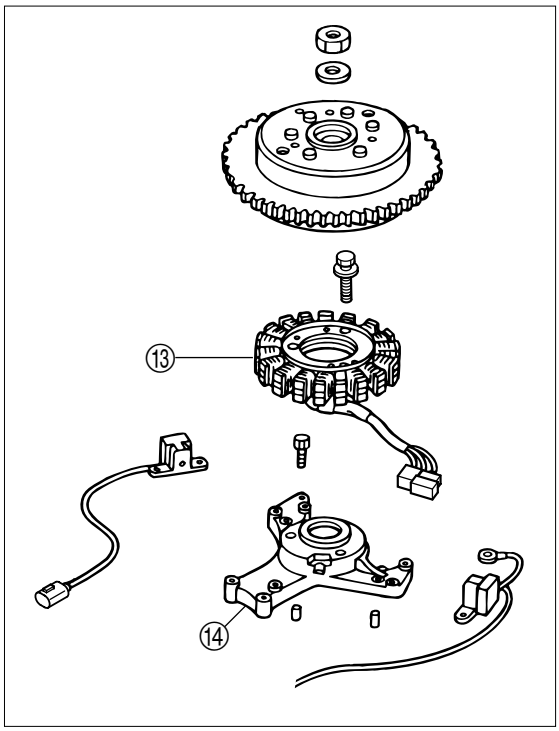

5) Removing Timing Belt and Pulley

1. Turn timing pulley ① clockwise to bring "●" mark ⓐ of belt guide to "●" mark ⓑ of cylinder block, and check that "●I" mark ⓒ of cam shaft pulley ② and "▲" mark ⓓ of cylinder head are aligned with each other.

   No.1 piston is to be at top dead center of compression stroke.

2. Loosen tensioner bolt ③ to remove tension of the belt, and then tighten the bolt temporarily.

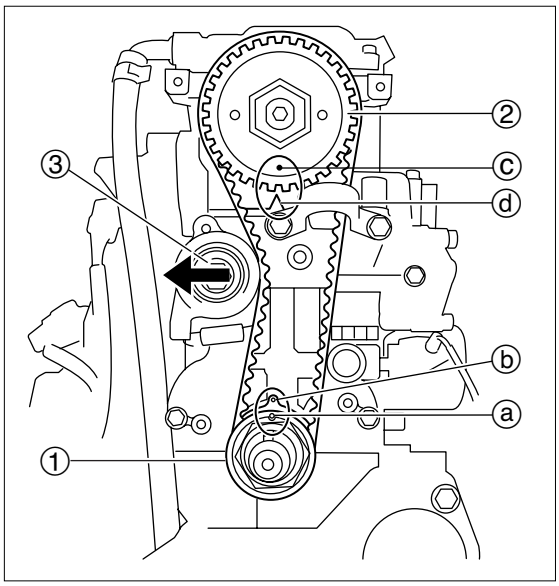

3. Lay down timing pulley nut ④ lock washer's tab.

4. Use vice to fix power unit at crank shaft holder 2 ⑥.

5. Loosen timing pulley nut ④.

   - Use 40mm deep socket wrench ⑤ or ring wrench for this step.
   - Do not turn cam shaft pulley ② when tightening timing pulley ① nut ④.
   - Keep timing belt ⑦ engaged as a means of precaution.

   A Crankshaft Holder 2 ⑥ :
   P/N. 3AC-99815-0
   B Crankshaft Holder :
   P/N. 3R0-72815-0

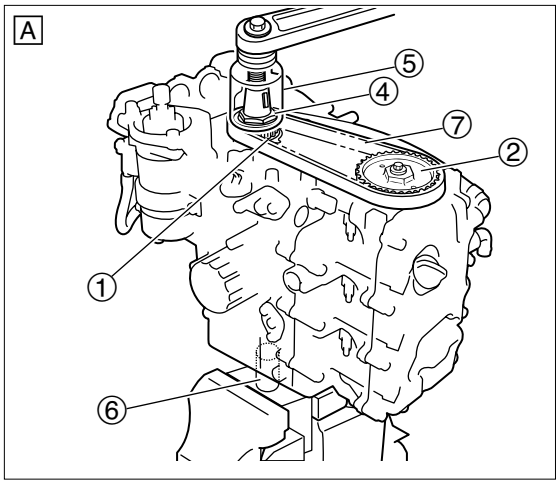

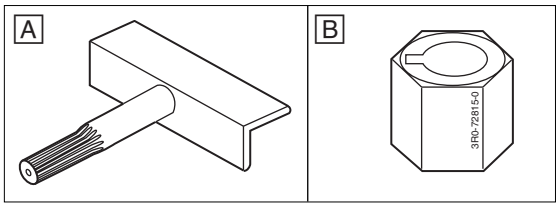

6. Remove bolt ③ and remove belt tensioner.

7. Remove hanger.

8. Remove timing belt ⑦ from cam shaft pulley ② side, and then, from timing pulley side.

⚠ CAUTION

Do not turn timing pulley (crank shaft) or cam shaft pulley with timing belt removed. Doing so can make pistons and valves interfere with each other, resulting in damages to these parts.

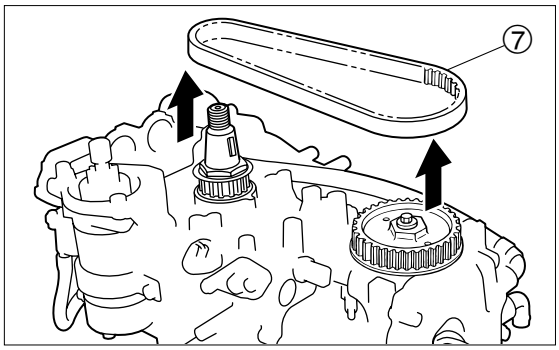

8. Remove cam shaft pulley ⑧ bolt ⑨, and then, remove cam shaft pulley ⑧.

When loosening cam shaft pulley bolt, be careful not to turn cam shaft pulley.

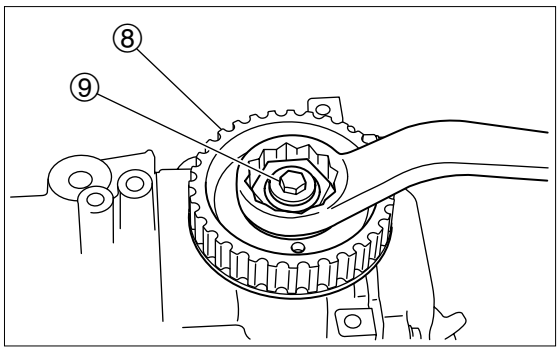

9. Remove nut ⑩, lock washer ⑪, belt guide ⑫, timing pulley ⑬ and key ⑭.

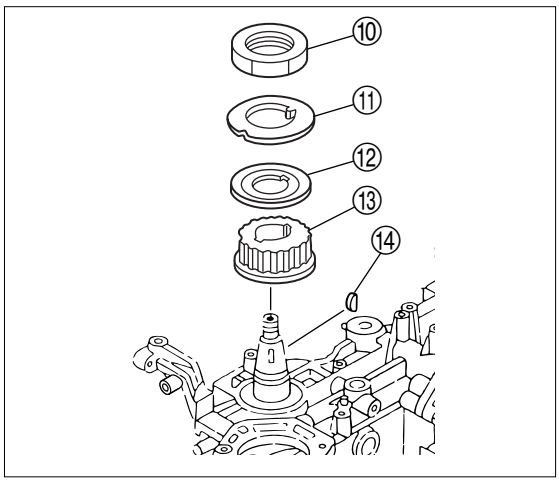

6) Inspection of Timing Belt

1. Check timing belt for crack, damage and wear on both faces. Replace if necessary.

2. Check timing pulley and cam shaft pulley for crack, damage and wear. Replace if necessary.

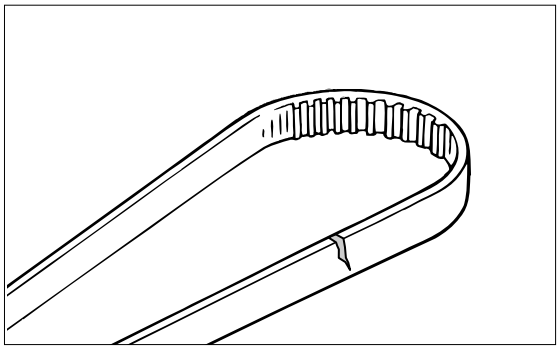

7) Installation of Pulley and Timing Belt

1. Install cam shaft pulley, bring "●I" mark ⓐ of cam shaft pulley ① to "▲" mark of cylinder head, and then, tighten bolt ② to specified torque.

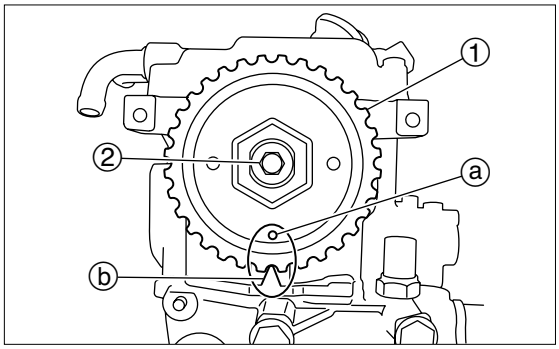

No.1 piston is to be at top dead center of compression stroke.

Cam Shaft Pulley Bolt ② :
11 N·m (8 lb·ft) [1.1 kgf·m]

⚠ CAUTION

Do not turn timing pulley or cam shaft pulley with timing belt removed. Doing so can make pistons and valves interfere with each other, resulting in damages to these parts.

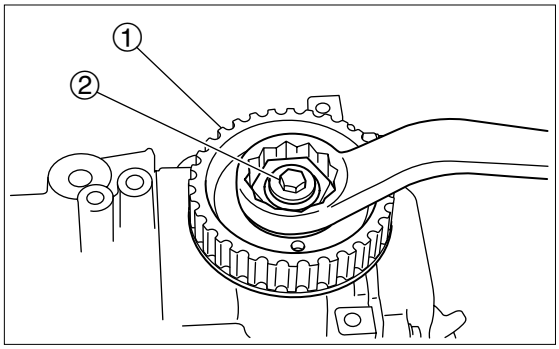

2. Install key ③, timing pulley ④, belt guide ⑤, lock washer ⑥ and nut ⑦ in this order. Tightening to specified torque is performed later.

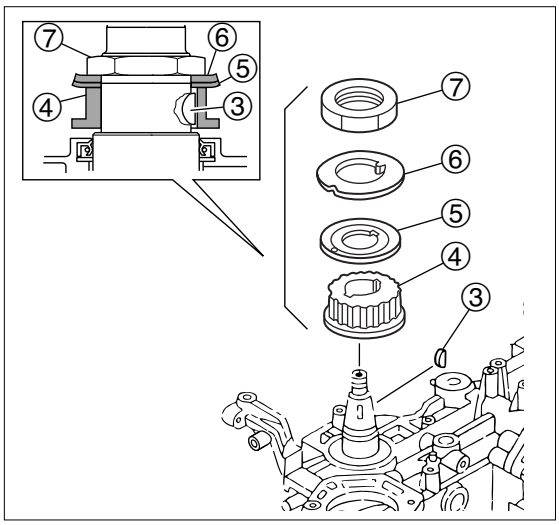

3. Check that "●" mark ⓒ of belt guide ⑧ and "●" mark ⓓ of cylinder block are aligned with each other.

No.1 piston is to be at top dead center of compression stroke.

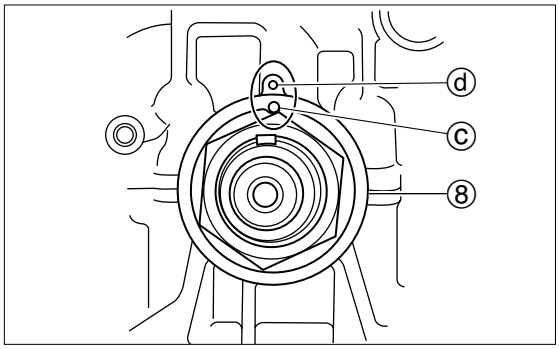

4. Face part number side of timing belt ⑨ up, align locating lines ⓐ of the belt as shown, and engage belt with timing pulley and then with cam shaft pulley.

⚠ CAUTION

- **Be careful not give damage to timing belt when installing.**
- **Do not twist timing belt, bring inside out, or bend sharp, or it may be damaged.**
- **Be careful not to allow oil or grease to adhere to timing belt.**

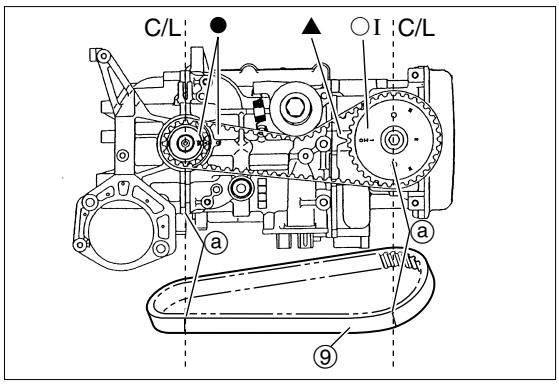

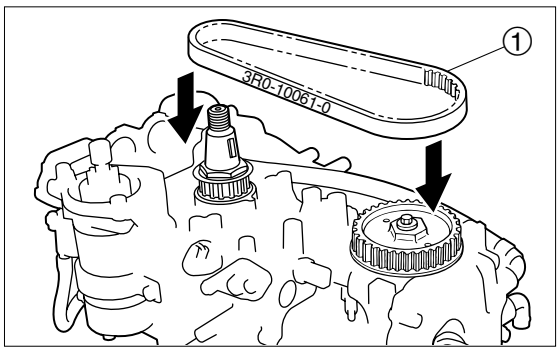

5. Install tensioner bolt ⑩, reduce tension of the belt, and then tighten the bolt temporarily.

6. Reinstall hanger ⑪ and tighten bolt to specified torque.

Hanger bolt :
23 N·m (17 lb·ft) [2.3 kgf·m]

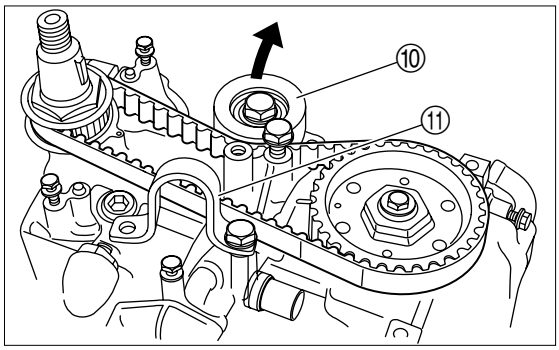

7. Tighten timing pulley nut ⑫ to specified torque.

Use 40mm deep socket wrench ⑬ or ring wrench for this step.

A Crankshaft Holder 2 ⑭ :
P/N. 3AC-99815-0
B Crankshaft Holder :
P/N. 3R0-72815-0

Timing Pulley Nut :
64 N·m (46 lb·ft) [6.4 kgf·m]

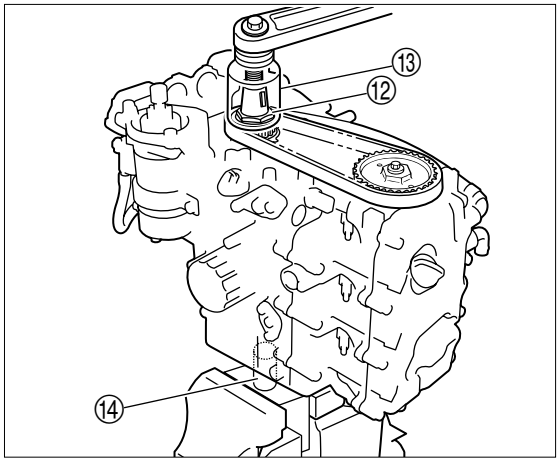

⑬ Deep Socket Wrench, 40mm
⑭ Crankshaft Holder

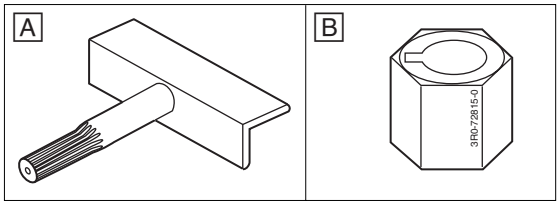

8. Turn timing pulley ⑮ clockwise twice, and check that locating marks ⓐ and ⓑ, and ⓒ and ⓓ of pulleys ⑮ and ⑯ are aligned with each other respectively.

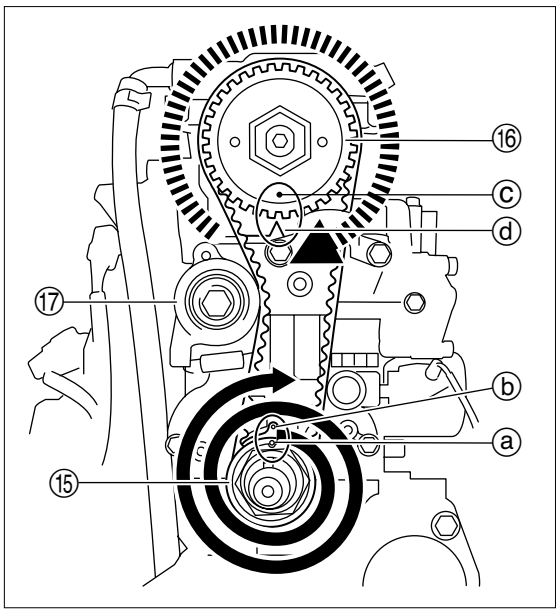

9. Loosen belt tensioner ⑰ bolt.

10. Turn timing pulley ⑮ approximately 25 degrees counterclockwise to move belt tensioner ⑰ until cam shaft pulley ⑯ shifts one tooth (approximately 11 degrees). (Belt gets soft at port side.)

> The above step prevents excessive tensioning of belt tensioner and allows fixing of the component to a properly adjusted position.

11. Tighten belt tensioner ⑰ bolt to specified torque.

> **Belt Tensioner Bolt :**
> 27 N·m (20 lb·ft) [2.7 kg]

12. Attach cap to belt tensioner ⑰.

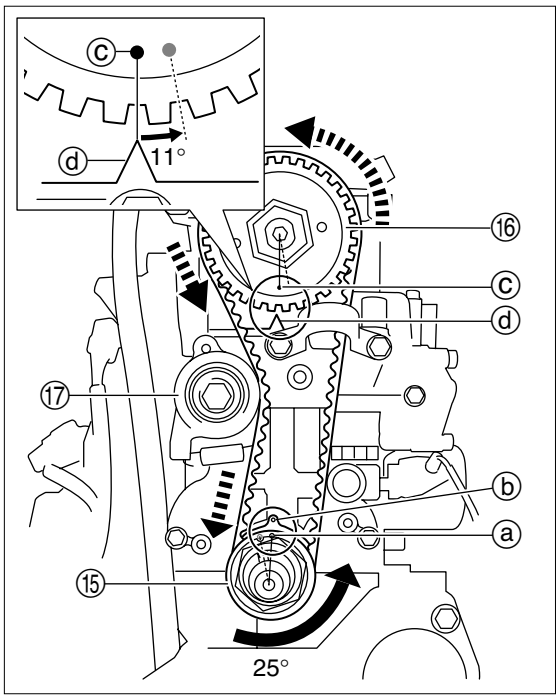

5

8) Removing Cylinder Head

- No.1 piston is to be at top dead center of compression stroke.
- Removal or installation of parts can be made easier when some of them are assembled together.

1. Remove power unit. (Refer to the section for removing power unit.)
2. Remove fuel system parts from power unit.
3. Remove electrical system parts from power unit.
4. Remove intake manifold ass'y.

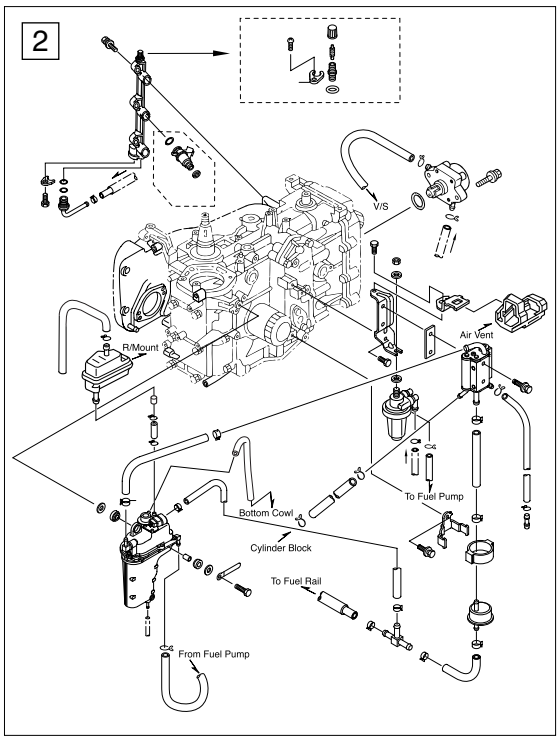

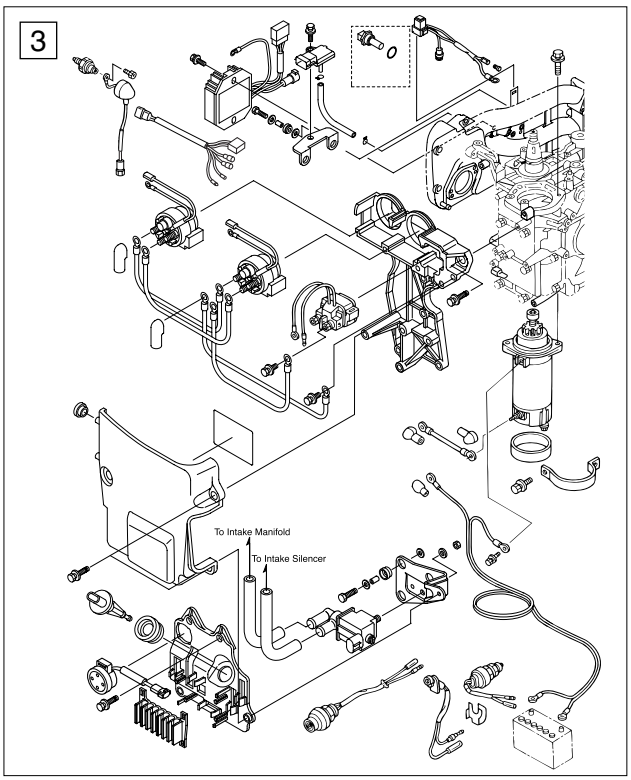

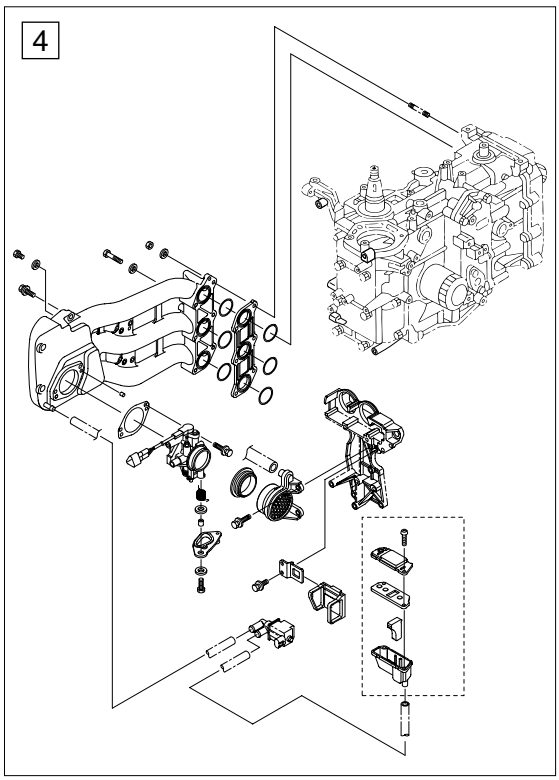

5. Remove cylinder head bolts in the reverse sequence of order shown, and remove cylinder head.

⚠ CAUTION

Do not scratch or give damage to mating surfaces of cylinder head and cylinder block.

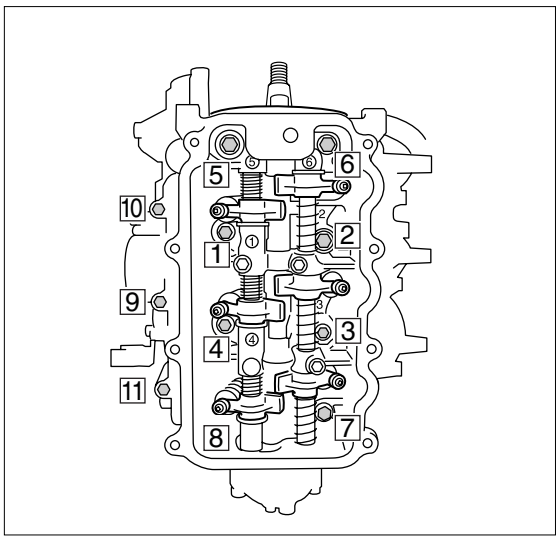

6. Remove oil pump ass'y ①.

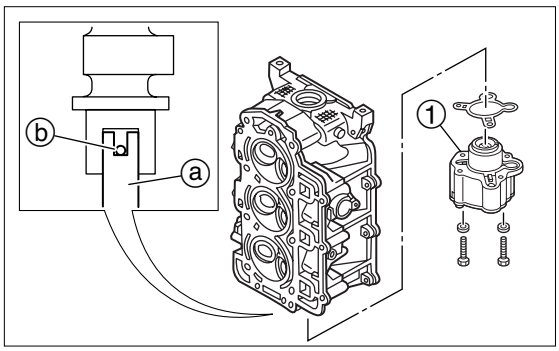

7. Loosen rocker arm lock nut, and loosen adjusting screw as much as possible. Remove rocker arm , spring, washer and rocker arm shaft .

- The work can be made easier when cam shaft is brought to a position of low valve spring force.
- Since rocker arm shaft is threaded on the lower end, put a bolt on this end and pull the shaft downward by using the bolt.
- Pull the shaft while holding other parts with a hand.

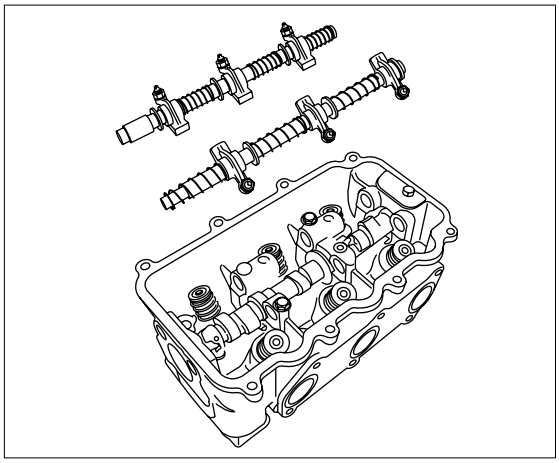

8. Remove cam shaft pulley ② and cam shaft ③.

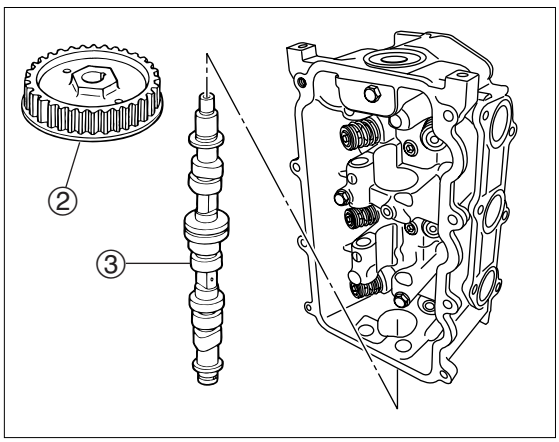

5

9. Compress valve spring ④ by using compressor ⑥, remove cotter, and then, spring and valve.

Valves, springs and other related parts should be arranged in the order they are removed.

Valve Spring Compressor ⑥ :
P/N. 3AC-99075-0

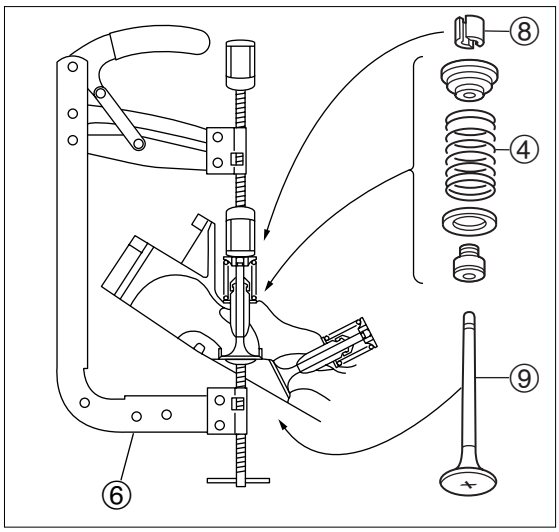

9) Inspection of Valve Spring

1. Measure valve spring free length ⓐ. Replace if the length is less than specified value.

Valve Spring Free Length ⓐ : Standard Value
35.0 mm (1.38 in)

Functional Limit :
33.5 mm (1.32 in)

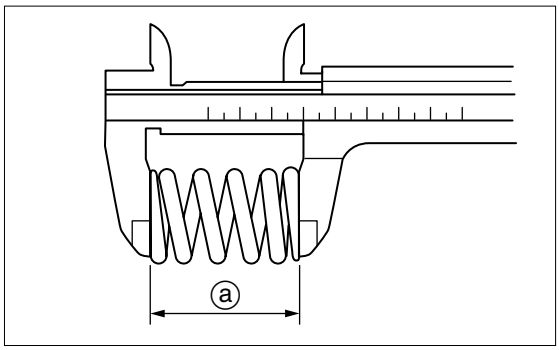

2. Measure valve spring inclination ⓑ. Replace if the angle is over specified value.

Valve Spring Inclination Limit ⓑ :
2.0 mm (0.08 in)

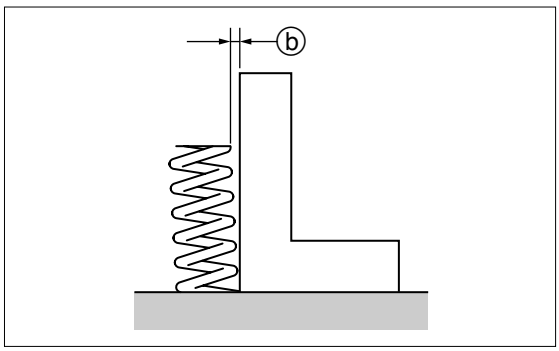

10) Inspection of Valve

1. Check valve for dent and wear on the face. Replace if necessary.

2. Measure valve stem outer diameter ⓑ. Replace if the diameter is less than specified value.

Valve Stem Outer Diameter ⓑ : Standard Value Intake Side : 5.48 mm (0.216 in) Exhaust Side : 5.46 mm (0.215 in)
Functional Limit : Intake Side : 5.46 mm (0.215 in) Exhaust Side : 5.44 mm (0.214 in)

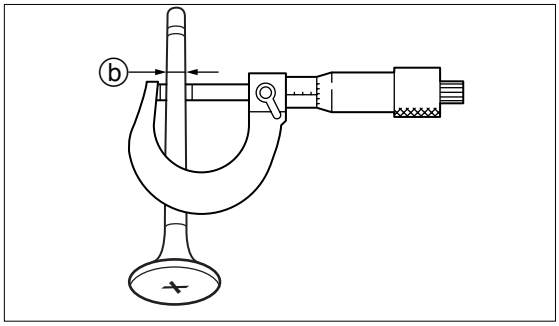

3. Measure valve stem runout. Replace if the runout is over specified value.

Valve Stem Runout Limit : Intake Side : 0.07 mm (0.0028 in) Exhaust Side : 0.05 mm (0.0020 in)

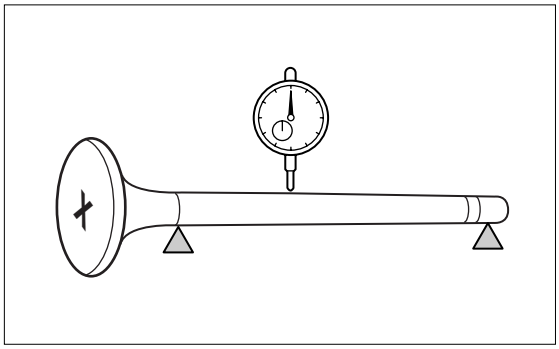

11) Inspection of Valve Guide

Before inspecting valve guide, check that valve stem outer diameter is within specified range.

1. Measure valve guide inner diameter ⓐ. Replace cylinder head if the inner diameter is over specified value.

Valve Guide Inner Diameter ⓐ : Standard Value Intake/Exhaust Side : 5.51 mm (0.217 in)
Functional Limit : Intake Side : 5.55 mm (0.0218 in) Exhaust Side : 5.57 mm (0.0219 in)

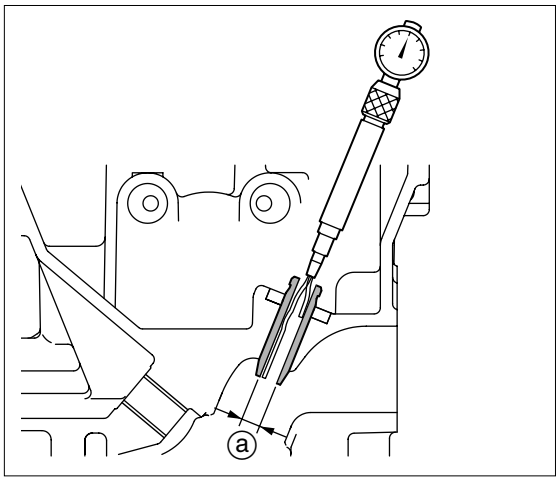

2. Obtain clearance between valve guide and valve stem by calculating as described below. Replace cylinder head and/or valve if the clearance is over specified value.

Clearance between Valve Guide and Valve Stem = **Valve Guide Inner Diameter ⓐ – Valve Stem Outer Diameter ⓑ :** Intake Side : 0.008 to 0.040 mm (0.0003 to 0.0016 in) Exhaust Side : 0.025 to 0.057 mm (0.0010 to 0.0022 in)
Functional Limit : Intake Side : 0.07 mm (0.0028 in) Exhaust Side : 0.10 mm (0.0040 in)

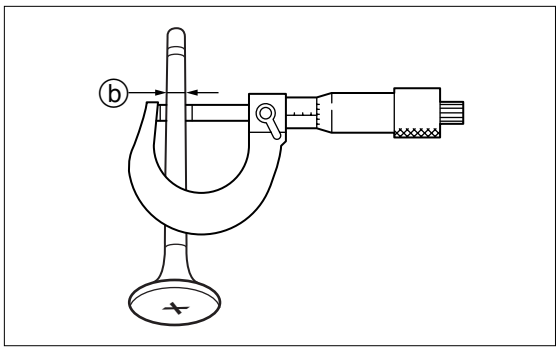

12) Inspection of Valve Seat

1. Remove carbon built up on the valve.

2. Apply thin coat of red lead on the valve seat.

3. Use valve lapper (commercially available item) as shown to push valve onto valve seat lightly.

4. Measure width of area where valve face contacted with valve seat ⓐ that can be identified with red lead adhered to valve face. Correct valve seat if contact area is above or below the center or contact area of valve seat is over specified limit.

	Valve Sear Contact Width ⓐ : Standard Value Intake/Exhaust Side : 1.0 mm (0.04 in)
	Functional Limit : Intake/Exhaust Side : 2.0 mm (0.08 in)

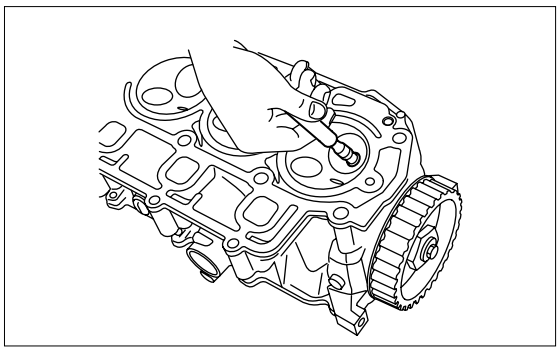

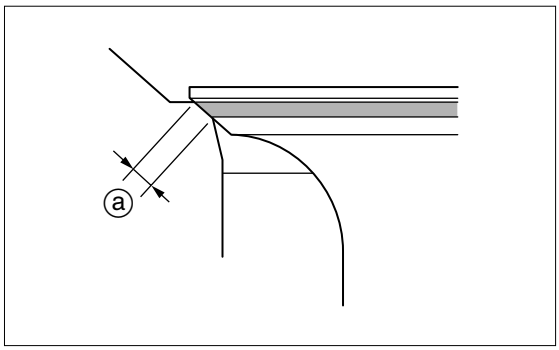

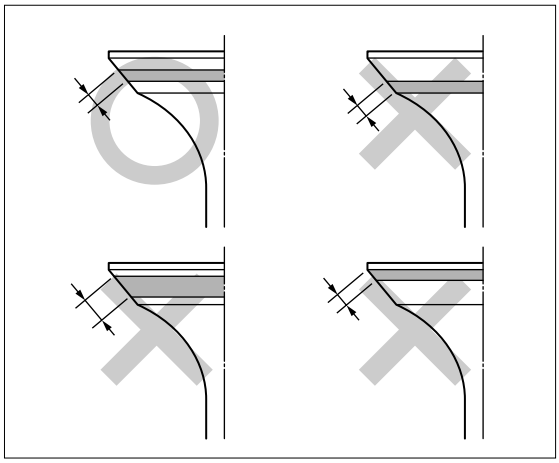

13) Correction of Valve Seat

1. Use valve seat cutter (commercially available item) to correct valve seat.

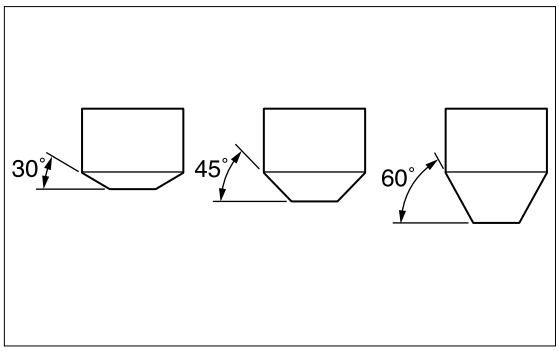

2. Turn 45 degree cutter clockwise to cut valve seat surface to make it smooth.

> Be careful not to over-cut valve seat. Turn valve seat cutter while pushing down evenly.

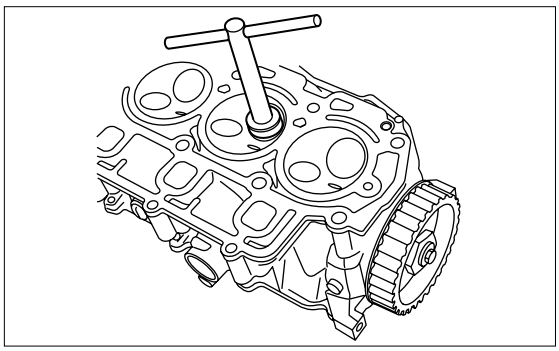

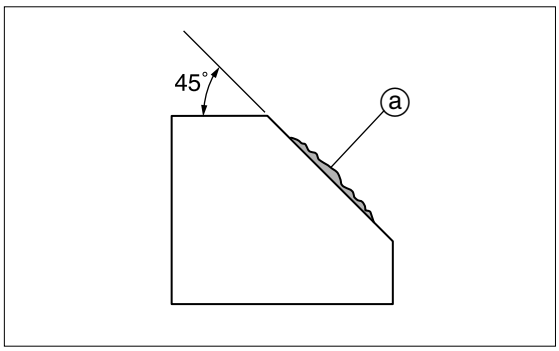

ⓐ Carbon build-up or uneven surface.

3. Use 30 degree cutter to adjust contact position of valve seat upper end.

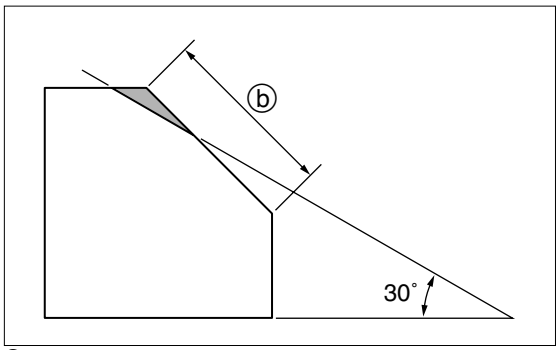

ⓑ Width before correction

4. Use 60 degree cutter to adjust contact position of valve seat lower end.

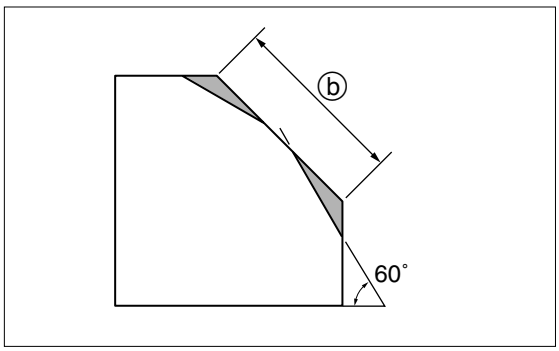

ⓑ Width before correction

5. Use 45 degree cutter to adjust contact width of valve seat ⓒ to specified value.

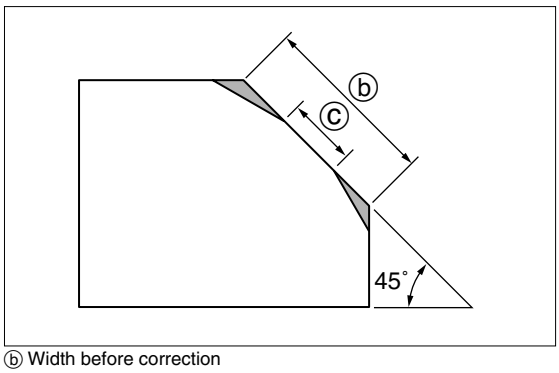

ⓑ Width before correction
ⓒ Specified width

6. Valve seat contact area is located on the center, which should be adjusted to specified value by cutting upper and lower ends by using 30 degree and 60 degree seat cutters respectively if the area is too wide.

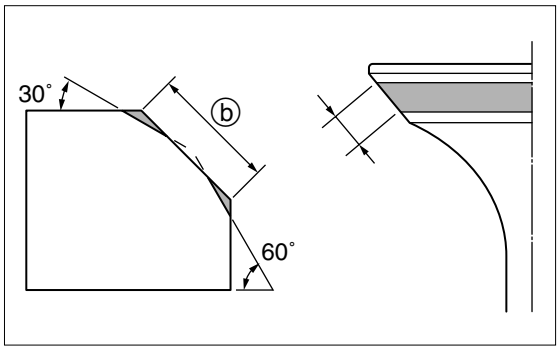

ⓑ Width before correction

7. If valve seat contact area is too narrow and is located neater to valve face upper end, use 30 degree seat cutter to cut upper end. Use 45 degree cutter to adjust contact width of valve seat to specified value.

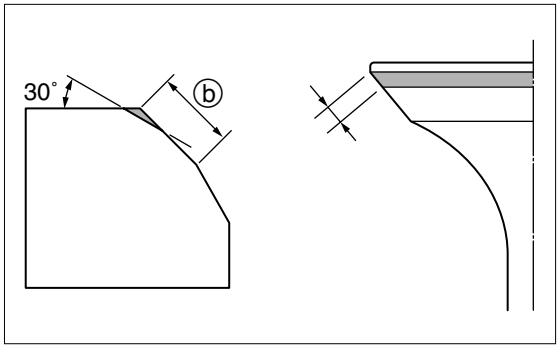

ⓑ Width before correction

8. If valve seat contact area is too narrow and is located neater to valve face lower end, use 60 degree seat cutter to cut lower end. Use 45 degree cutter to adjust contact width of valve seat to specified value.

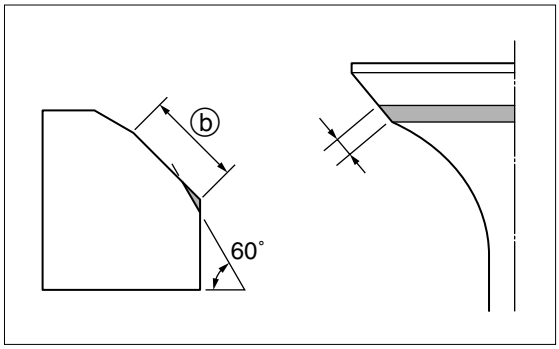

ⓑ Width before correction

9. Apply thin coat of abrasive compound on the overall valve seat contact area, and turn valve lapper (commercially available item) while tapping valve.

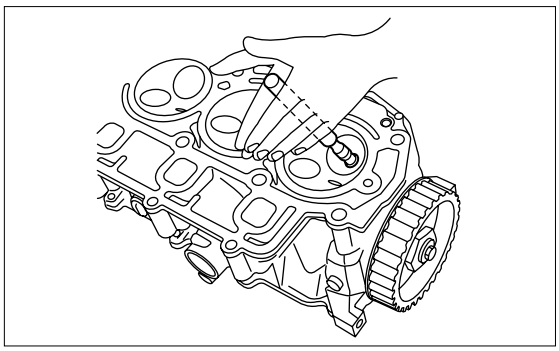

⚠ CAUTION

Perform the work by taking care not to allow abrasive compound to adhere to valve stem and valve guide.

- Use finer abrasive compound to finish.
- When changing abrasive compound to finer one, remove present one completely.
- After completion of lapping, wipe off the compound and then clean.

10. After ending the work, remove the compound completely from cylinder head and valve.

11. Check valve seat contact width ⓒ.

Valve Seat Contact Width ⓒ : Standard Value
1.0 mm (0.04 in)

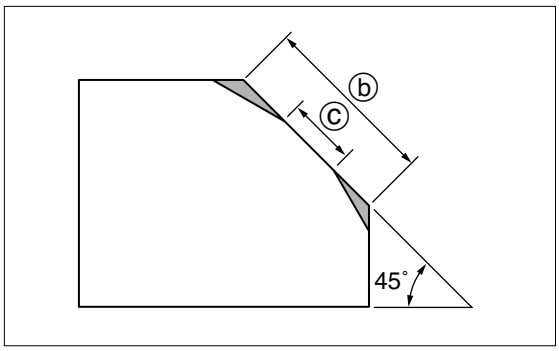

14) Inspection of Rocker Arm and Rocker Arm Shaft

1. Check rocker arm, rocker arm shaft and rocker arm contact area ⓐ for wear. Replace if necessary.

2. Measure rocker arm inner diameter ⓑ and rocker arm shaft outer diameter ⓒ. Obtain oil clearance ⓓ (ⓓ = ⓑ – ⓒ). Replace if the clearance is out of specified range.

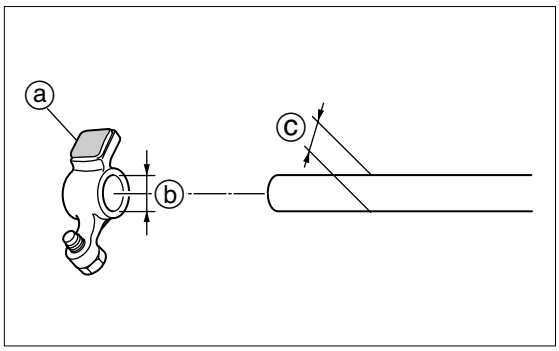

ⓓ = ⓑ – ⓒ

Rocker Arm Inner Diameter ⓑ : Standard Value
13.01 mm (0.5122 in)
Rocker Arm Shaft Outer Diameter ⓒ : Standard Value
12.99 mm (0.5114 in)
Oil Clearance Between Rocker Arm Hole and Shaft ⓓ :
0.006 to 0.035 mm (0.00024 to 0.00138 in)

Functional Limit :
Replace if ⓑ is over 13.05 mm (0.5138 in).
Replace if ⓒ is less than 12.94 mm (0.5094 in).
Replace if ⓓ is over 0.060 mm (0.00236 in).

5

15) Inspection of Cam Shaft

1. Measure cam height. Replace if the height is less than specified value.

Cam Height at Both Intake and Exhaust Sides ⓐ : Standard Value
25 : 23.87 mm (0.9498 in)
30 : 24.28 mm (0.9559 in)

Functional Limit : Cam Height at Both Intake and Exhaust Sides ⓐ
25 : 23.60 mm (0.9291 in)
30 : 24.00 mm (0.9449 in)

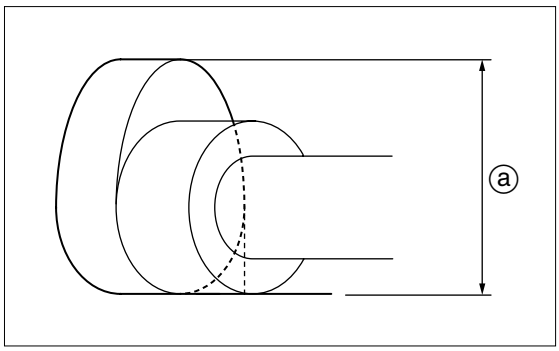

2. Measure cam shaft runout. Replace if the runout is over specified value.

Cam Shaft Runout Limit :
0.05mm (0.0020 in)

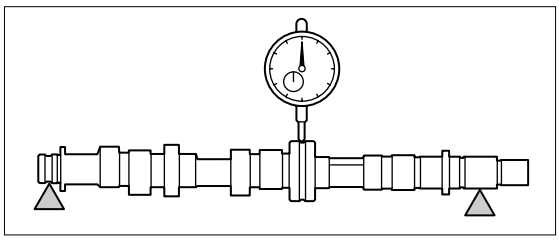

3. Measure cam shaft journal outer diameters ⓒ and ⓓ. Replace cam shaft or cylinder head if either of the diameters is less than specified value.

Cam Shaft Journal Outer Diameter ⓒ : Standard Value
17.98 mm (0.7079 in)
Cam Shaft Journal Outer Diameter ⓓ : Standard Value
15.97 mm (0.6287 in)
Cylinder Head Journal Inner Diameter ⓔ (Upper) :
18.010 to 18.025 mm (0.7091 to 0.7096 in)

Pulley Side Bearing Outer Diameter ⓒ :
17.95 mm (0.7067 in)
Oil Pump Side Bearing Outer Diameter ⓓ :
15.95 mm (0.6280 in)

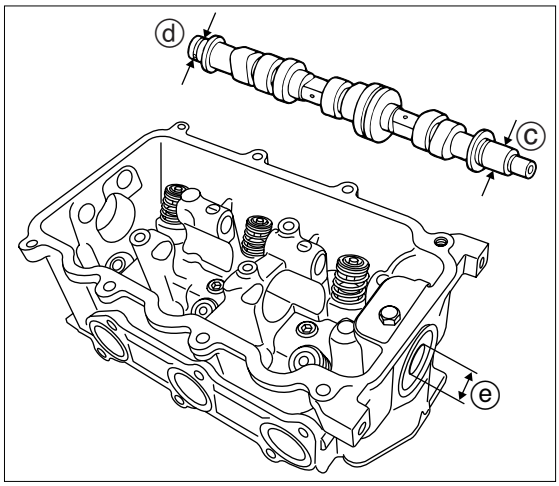

4. Measure cylinder head journal inner diameter ⓔ and oil pump journal inner diameter ⓕ. Obtain oil clearances. They are calculated as ⓔ – ⓒ and ⓕ – ⓓ respectively. Replace cam shaft, cylinder head or oil pump if either of the clearances is over specified value.

Oil Clearance : Standard Value
0.02 to 0.05 mm (0.0008 to 0.0020 in)

Functional Limit :
0.09 mm (0.0035 in)

If oil clearance is over functional limit, replace any of cylinder head, cam shaft and oil pump or all of them as a set, and check that the clearance is within specified range.

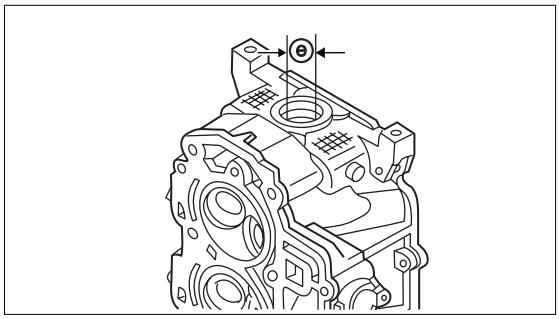

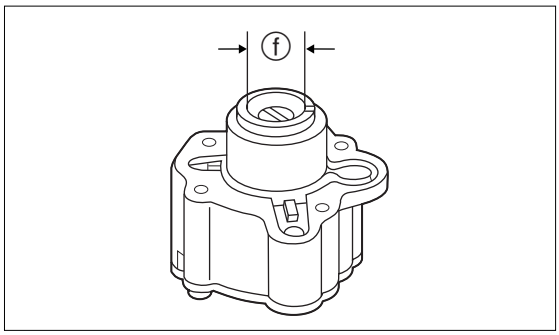

16) Inspection of Cylinder Head

1. Remove carbon build-up of combustion chamber, and check for deterioration.

2. Use straight edge ① and thickness gauge ② to check distortion of cylinder head in the directions shown. Replace if the distortion is over specified value.

Cylinder Head Distortion Limit :
0.10 mm (0.004 in)

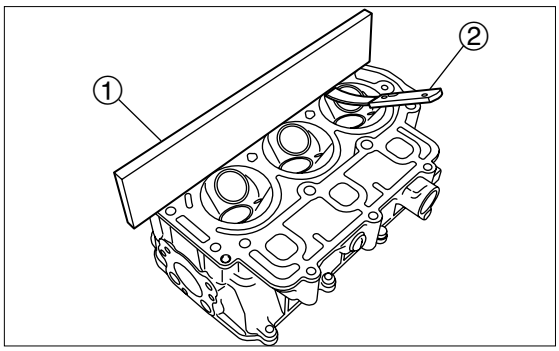

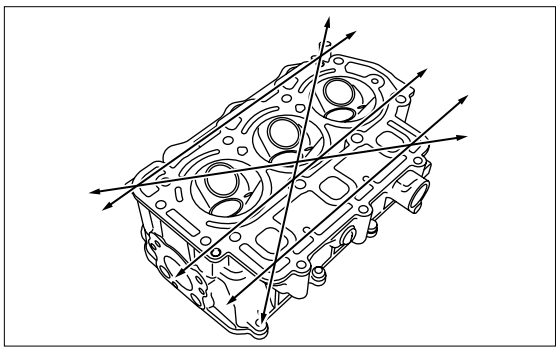

5

17) Inspection of Oil Pump

1. Use micrometer, cylinder gauge, depth gauge and thickness gauge to measure dimensions shown below. Replace oil pump if over specified value.

Functional Limit :
Clearance between Outer Rotor and Body ⓐ :
0.25 mm (0.0098 in)
Clearance between outer and inner rotors ⓑ :
0.16 mm (0.0063 in)
Clearance between sides of rotor and body ⓒ :
0.11 mm (0.0043 in) (including wear of oil pump cover)
Height of Outer Rotor ⓓ :
14.96 mm (0.5890 in)
Pump Body Inner Diameter ⓔ :
40.8 mm (1.605 in)

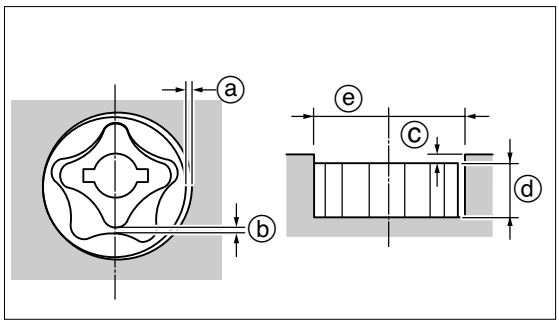

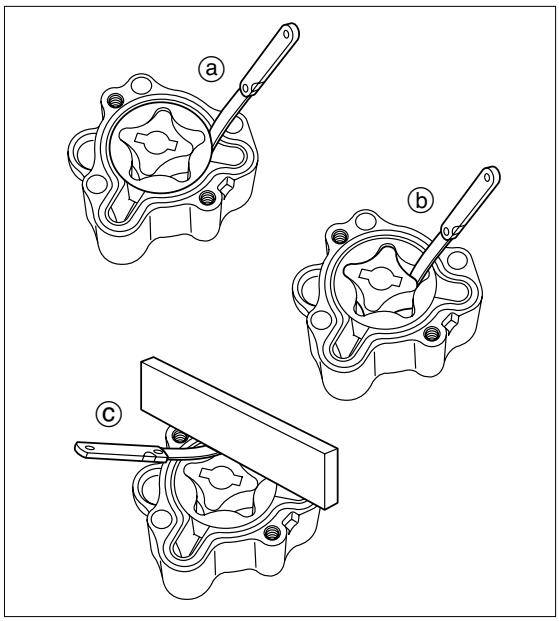

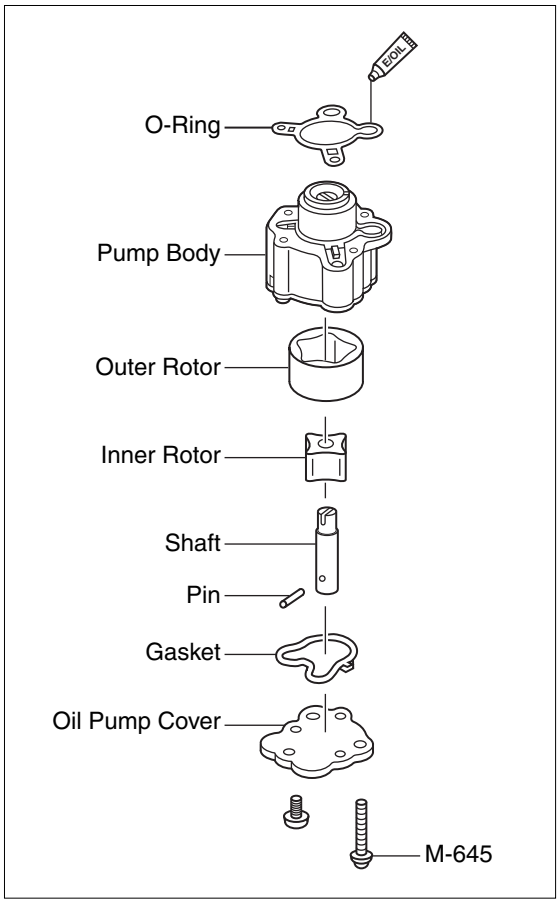

18) Installation of Valves

1. Apply oil to valve guide and attach new valve stem seal.

> Intake Side : Black
> Exhaust Side : Green

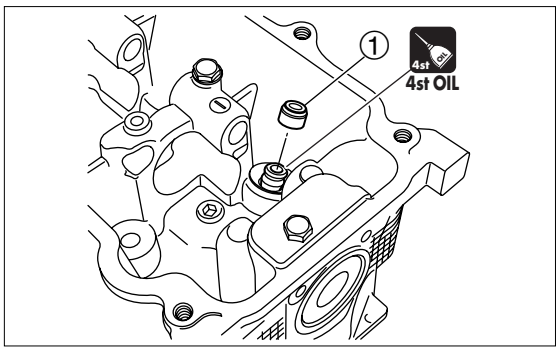

2. Install valve ②, valve spring seat ③, valve spring ④ and retainer ⑤ in the order shown, and then, attach valve spring compressor ⑥.

> **Valve Spring Compressor ⑥ :**
> P/N. 3AC-99075-0

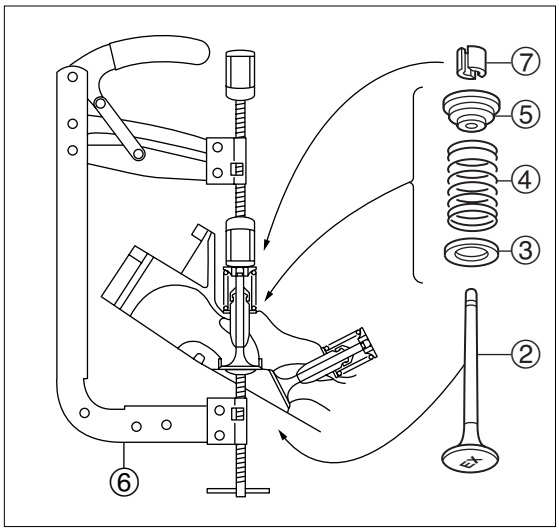

3. With valve spring ④ being compressed, use small screw driver with small amount of grease at the tip to put cotter ⑦.

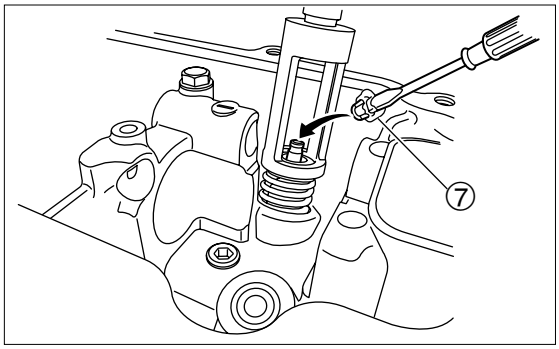

4. Tap retainer ⑤ with plastic hammer to fix cotter ⑦ securely.

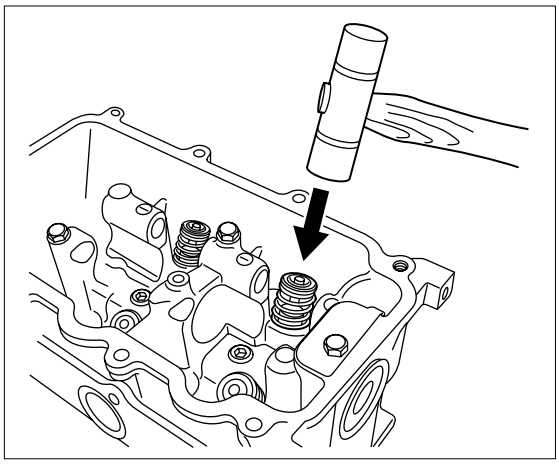

5

19) Installation of Cam Shaft

1. Apply engine oil to periphery of new oil seal and install it.

Driver Rod :
P/N. 3AC-99702-0
Oil Seal Attachment :
P/N. 3AC-99820-0

Apply grease to lip of oil seal before installing it.

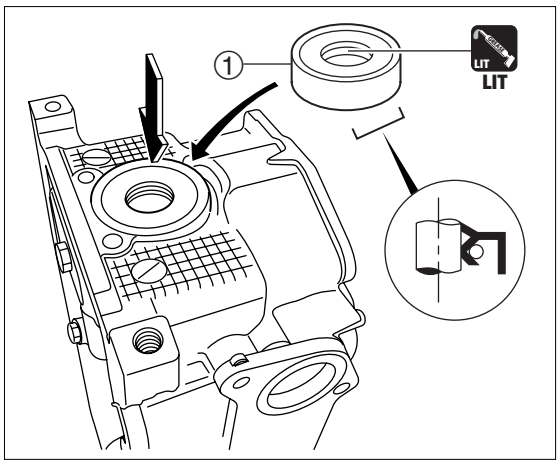

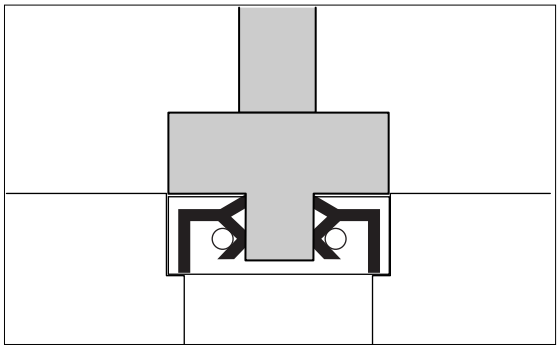

2. Install cam shaft ② from direction shown.

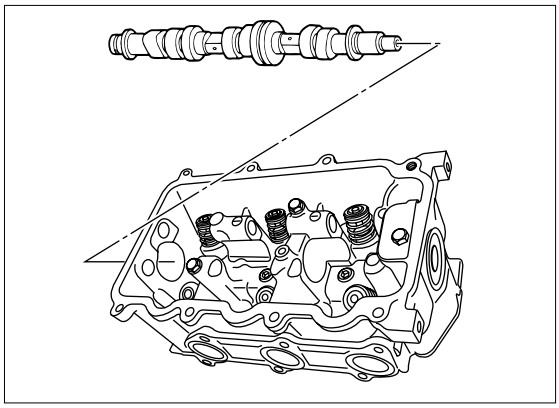

20) Installation of Rocker Arm Shaft

1. Install rocker arms ①, springs ③, washers ④ and collar ⑤ from lower side of cylinder head while installing rocker arm shaft ②.

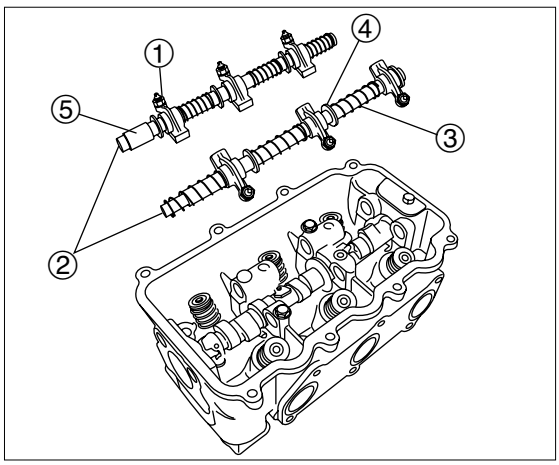

2. Tighten rocker arm shaft locating bolt ⑥ to specified torque.

Rocker Arm Shaft Bolt :
9 N·m (7 lb·ft) [0.9kgf·m]

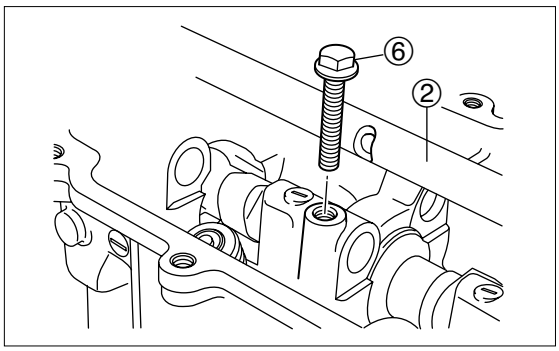

21) Installation of Oil Pump

1. Align cuts of oil pump drive shaft ⓐ and cam shaft pin ⓑ with each other to install oil pump ①.

Feed engine oil of approximately 2ml to oil passages ⓒ before installing oil pump.

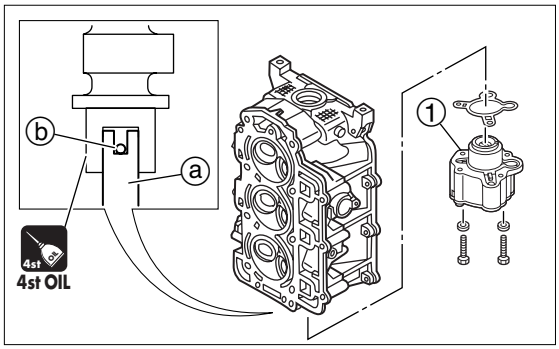

2. Apply engine oil to oil pump O-ring and cam shaft lower side journal ②, and install oil pump.

3. Secure oil pump using three M6 bolts by tightening them to specified torque in the order specified below.
Bolt tightening order : 1 → 2 → 3

Oil Pump Bolts :
9 N·m (7 lb·ft)[0.9 kg·m]

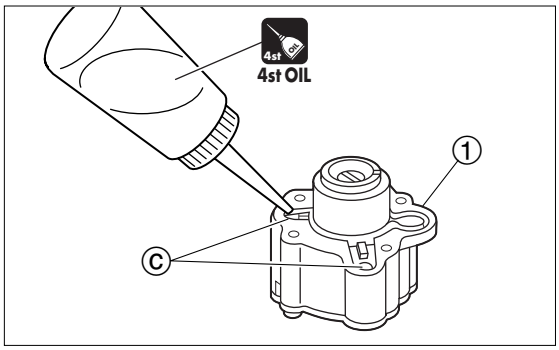

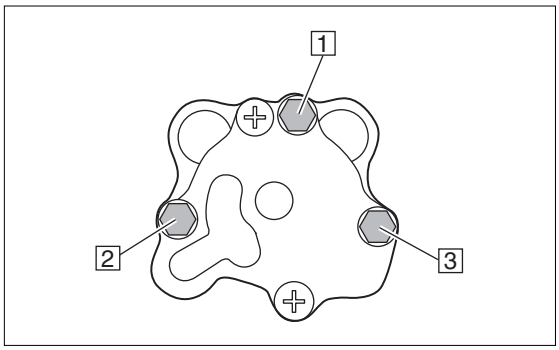

5

22) Installation of Cylinder Head

No.1 piston is to be at top dead center of compression stroke.

1. After installing cam shaft pulley, bring "●I" mark ⓐ of pulley ① to "▲" mark ⓑ of cylinder head.

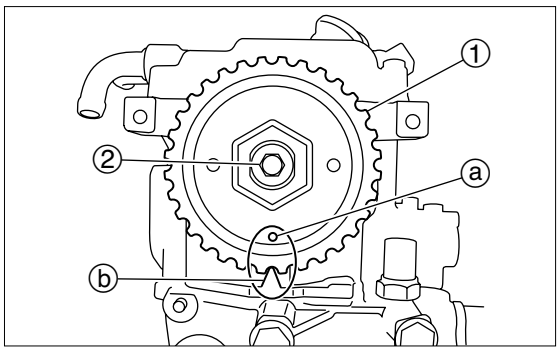

2. Check that "●" mark ⓒ of belt guide and "●" mark ⓓ of cylinder block are aligned with each other.

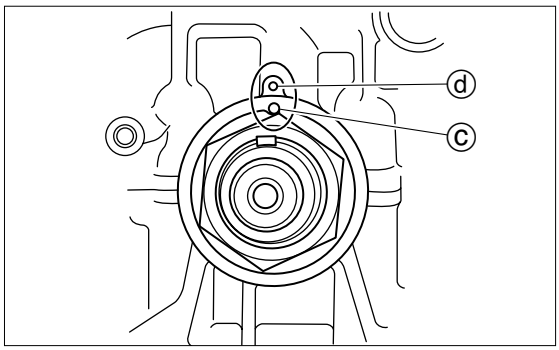

3. Install cylinder head with new gasket, and tighten bots in the order shown in two steps to specified torque.

⚠ CAUTION

- **Do not reuse cylinder head gasket. Be sure to replace with new one.**
- **Do not turn timing pulley or cam shaft pulley with timing belt removed. Doing so can make pistons and valves interfere with each other, resulting in damages to these parts.**

- First, tighten M8 bolts in two steps to specified torque.
- Then, tighten M6 bolts in two steps to specified torque.
- After installing cylinder head, install timing belt and check valve clearance. For the procedure, refer to relevant sections.

Cylinder Head Bolts (M8) 1 ~ 8
First Step : 10 N·m (7 lb·ft) [1.0 kgf·m]
Second Step : 30 N·m (22 lb·ft) [3.0 kgf·m]
Cylinder Head Bolts (M6) 9 ~ 11
First Step : 6 N·m (4 lb·ft) [0.6 kgf·m]
Second Step : 10N·m (7 lb·ft) [1.0 kgf·m]

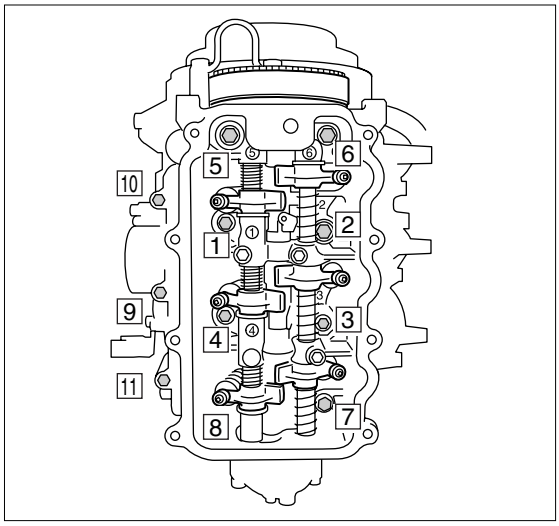

4. Install cylinder head cover, apply "Three Bond" 1342 to bolts, and tighten them to specified torque.

Cylinder Head Cover Bolts :
9 N·m (7 lb·ft) [0.9kgf·m]

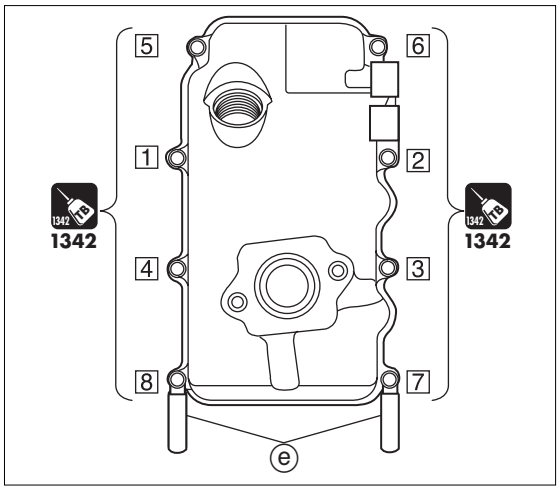

ⓔ Install downward.

23) Disassembly of Cylinder Block

1. Remove thermostat cover bolt and the cover ①.

2. Remove oil filter ②.

Wipe off spilt oil completely.

Oil Filter Wrench :
P/N. 3AC-99090-0

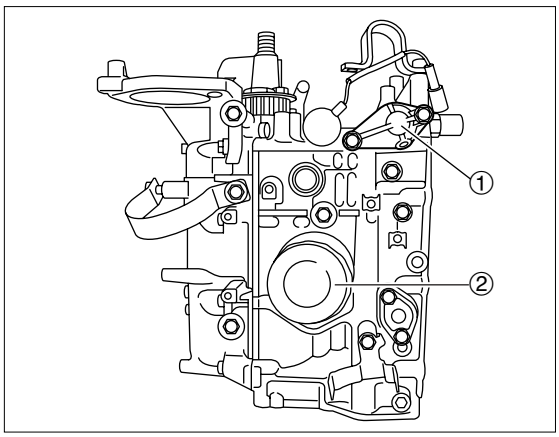

3. Loosen crank case bolts in several steps in the reverse sequence of order shown, and remove crank case. 16 ~ 1

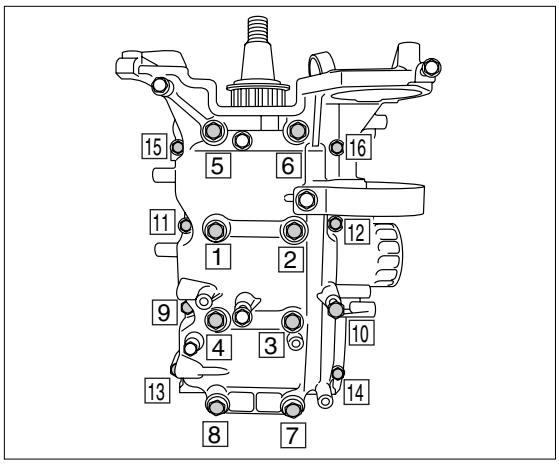

4. Remove connecting rod bolts ③ and connecting rod cap ④, and then, crankshaft ⑤ and oil seal.

5. Remove bearings from cylinder block and crank case.

6. Remove connecting rods and piston assemblies from cylinder block.

- Removed bearings should be arranged in the order they are removed.
- Mark individual pistons with number ⓐ corresponding to their cylinders.
- Connecting rods and caps should be arranged as pairs in the order they are removed. Removes parts should be arranged so that they can be reassembled in their original positions and orientations.
- Do not reuse piston pin clips. Be sure to replace with new ones.

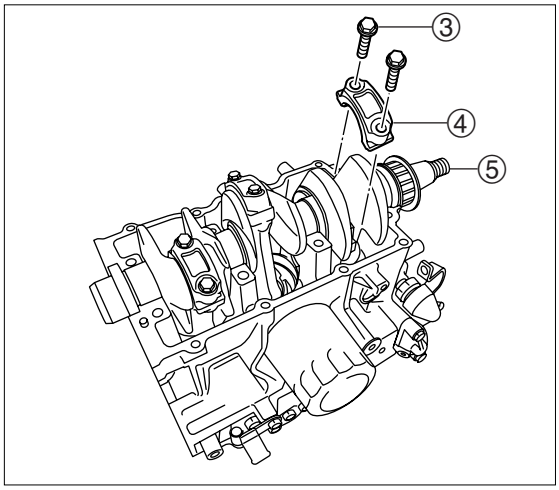

7. Remove piston pin clips ⑥ and piston pin, and then, piston.

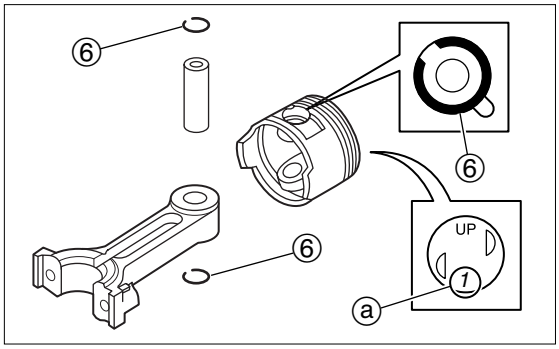

⑥ piston pin clips **Do not reuse.**

24) Inspection of Piston Outer Diameter

1. Measure piston outer diameter between points specified. Replace if the diameter is less than specified value.

Piston Outer Diameter ⓐ : Standard Value
60.96 mm (2.4000 in)
Measurement Points ⓑ :
9mm (0.35 in) above piston skirt bottom

Functional Limit :
60.90 mm (2.3976 in)

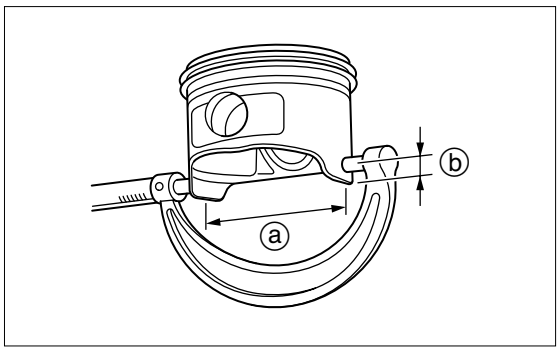

25) Inspection of Cylinder Inner Diameter

1. Measure cylinder inner diameters (D1 to D6) at ⓐ, ⓑ and ⓒ in crankshaft directions ⓓ (D1, D3 and D5 respectively), and in crank web directions ⓔ (D2, D4 and D6 respectively).

Cylinder Inner Diameters (D1 to D6) : Standard Value
61.00 mm (2.4016 in)

Functional Limit :
Replace if over 61.06 mm (2.4039 in).

Note : Measure at the maximum wear points.

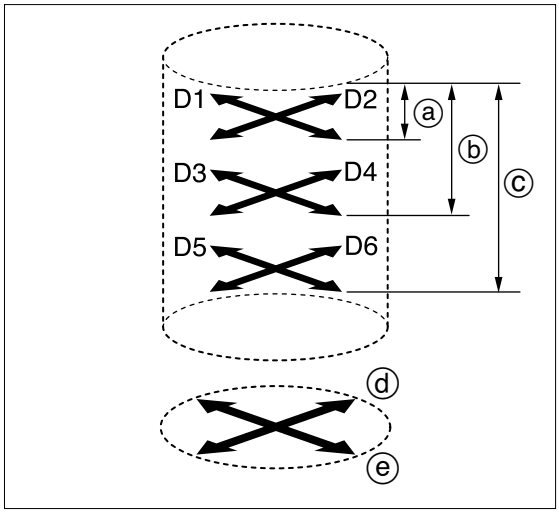

ⓐ 15mm (0.6in)
ⓑ 35mm (1.4in)
ⓒ 55mm (2.2in)

2. Obtain taper through calculation described below. Replace cylinder block if taper is over specified value.

Taper :
D1–D5 (Measurement Point ⓐ)
D2–D6 (Measurement Point ⓒ)

Functional Limit :
0.08 mm (0.0032 in)

3. Obtain out-of-roundness through calculation described below. Replace cylinder block if out-of-roundness is over specified value.

Out-of-roundness :
D2–D1 (Direction ⓓ)
D6–D5 (Direction ⓔ)

Functional Limit :
0.06 mm (0.0024 in)

26) Inspection of Piston Clearance

1. If piston clearance is over specified limit, replace cylinder block, piston and piston rings as a set, or both.

Piston Clearance :
0.020 to 0.055 mm (0.00079 to 0.00217 in)

Functional Limit :
0.150 mm (0.00591 in)

27) Inspection of Piston Ring Side Clearance

1. Measure piston side clearance. Replace piston and piston rings as a set if the clearance is over specified value.

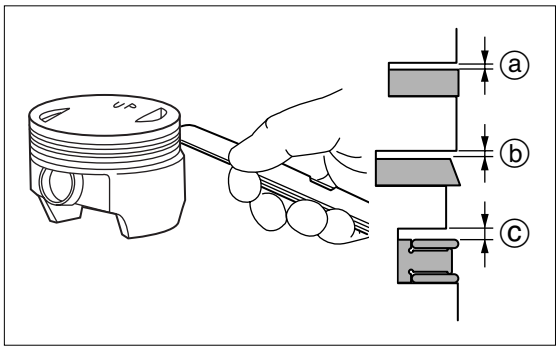

Piston Side Clearance :
Top Ring ⓐ : 0.04 to 0.08mm (0.0016 to 0.0031 in)
Second Ring ⓑ : 0.03 to 0.07mm (0.0012 to 0.0028 in)
Oil Ring ⓒ : 0.05 to 0.15mm (0.0020 to 0.0059 in)

Functional Limit :
Top Ring ⓐ : 0.10 mm (0.0039 in)
Second Ring ⓑ : 0.09 mm (0.0035 in)
Oil Ring ⓒ : 0.17 mm (0.0067 in)

28) Inspection of Piston Rings

1 Push piston ring ① into ring gauge 61.000mm (2.40157in) parallel to top edge. Measure at the top or bottom of cylinder bore with no wear.

2. When ring gauge is not available, use piston crown to push piston ring ① into to cylinder.

3. Measure piston ring closed gap ⓐ. Replace if the gap is over specified value.

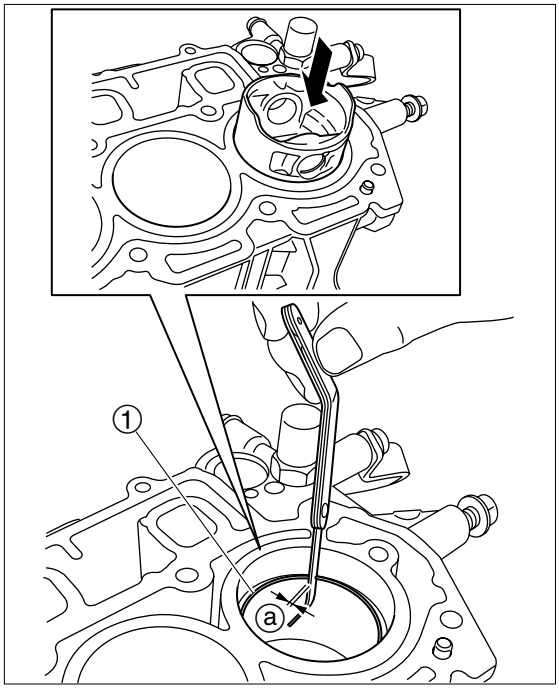

Piston Ring Closed Gap ⓐ :
Top Ring : 0.15 to 0.30 mm (0.0059 to 0.018 in)
Second Ring : 0.35 to 0.50 mm (0.0138 to 0.0197 in)
Oil Ring : 0.20 to 0.70 mm (0.0079 to 0.0276 in)

Functional Limit :
Top Ring : 0.50 mm (0.0197 in)
Second Ring : 0.70 mm (0.0276 in)

Replace oil ring when top ring or second ring is replaced.

5

29) Inspection of Piston Pins

1. Measure piston pin outer diameter. Replace piston pin if outer diameter is less than specified value.

	Piston Pin Outer Diameter : Standard Value 16.00 mm (0.6299 in)
	Functional Limit : 15.97 mm (0.6287 in)

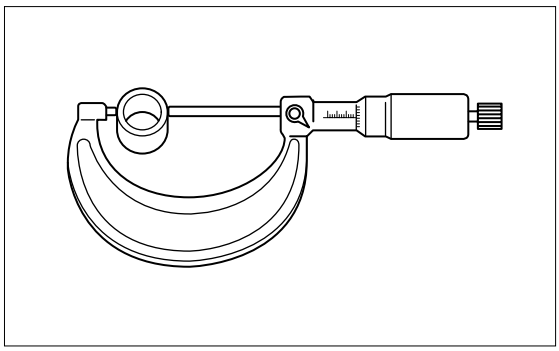

2. Measure piston pin boss inner diameter ⓐ.

3. Obtain clearance between piston pin and pin boss. Replace piston pin or piston if the clearance is over specified value.

	Clearance Between Piston Pin and Pin Boss : 0.002 to 0.012 mm (0.00008 to 0.00047 in)
	Functional Limit : 0.040 mm (0.00157 in)

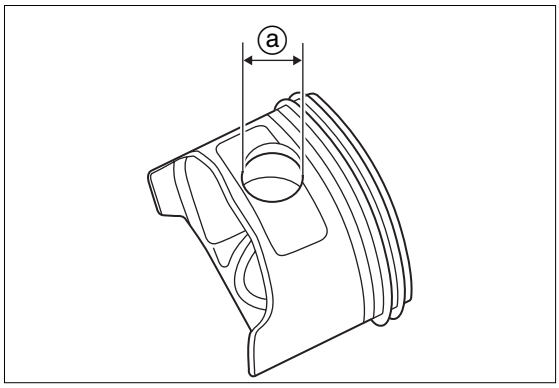

30) Inspection of Connecting Rod Small End Inner Diameter

1. Measure connecting rod small end inner diameter ⓐ. Replace connecting rod if the diameter is over specified value.

	Connecting Rod Small End Inner Diameter ⓐ : Standard Value 16.01 mm (0.6303 in)
	Functional Limit : 16.04 mm (0.6315 in)

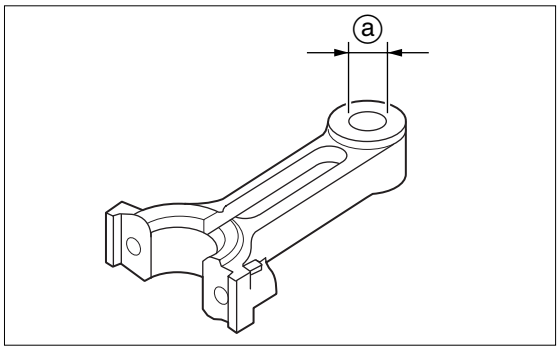

31) Inspection of Connecting Rod Big End Side Clearance

1. Measure connecting rod big end side clearance ⓐ. Replace connecting rod and/or crankshaft if the clearance is over specified value.

	Connecting Rod Big End Side Clearance ⓐ : 0.10 to 0.25 mm (0.0039 to 0.0098 in)
	Functional Limit : 0.60 mm (0.0236 in)

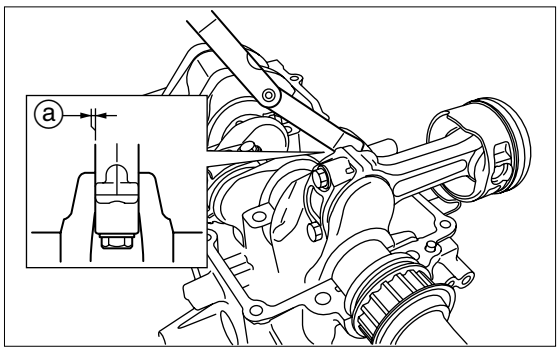

32) Inspection of Crankshaft

1. Measure crankshaft journal outer diameter ⓐ and crank pin outer diameter ⓑ. Replace crankshaft if either outer diameter is less than specified value.

Crankshaft Journal Outer Diameter ⓐ : Standard Value
35.99 mm (1.4169 in)
Crank Pin Outer Diameter ⓑ : Standard Value
29.98mm (1.1803 in)

Functional Limit :
Crankshaft Journal Outer Diameter ⓐ :
Replace if ⓐ is less than 35.97 mm (1.4161 in).
Crank Pin Outer Diameter ⓑ :
Replace if ⓑ is less than 29.95mm (1.1791 in).

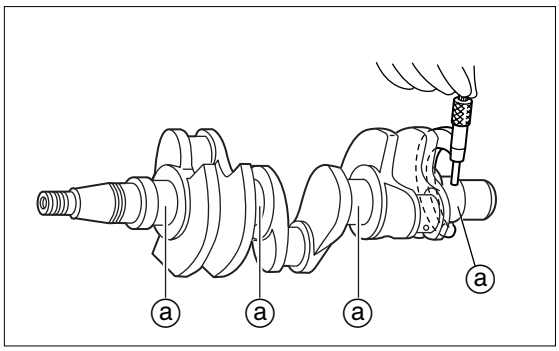

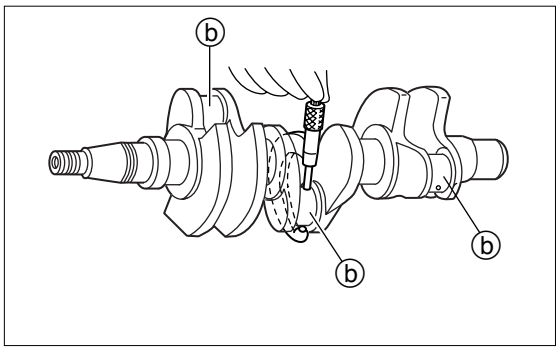

2. Measure crankshaft runout. Replace crankshaft if runout is over specified value.

Crankshaft Runout Limit :
0.05 mm (0.0020 in)

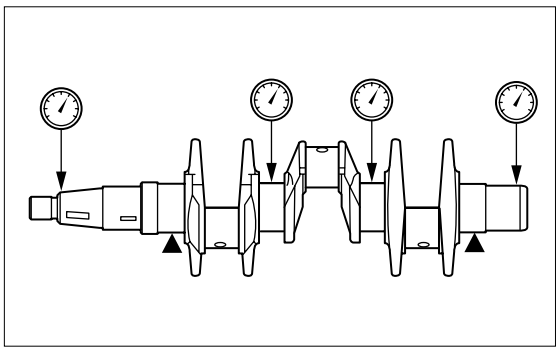

3. Side Clearance

Side Clearance :
0.05 to 0.15 mm (0.0020 to 0.0059 in)

Functional Limit :
0.50 mm (0.0197 in)

If side clearance is out of specified range, measure crank case (cylinder side) width ⓓ and crankshaft width ⓒ, and replace the part of which width is out of specified range.

Crankshaft Width ⓒ : Standard Value
17.05 to 17.10 mm (0.6713 to 0.6732 in)
Crank Case Width ⓓ : Standard Value
16.95 to 17.00 mm (0.6673 to 0.6693 in)

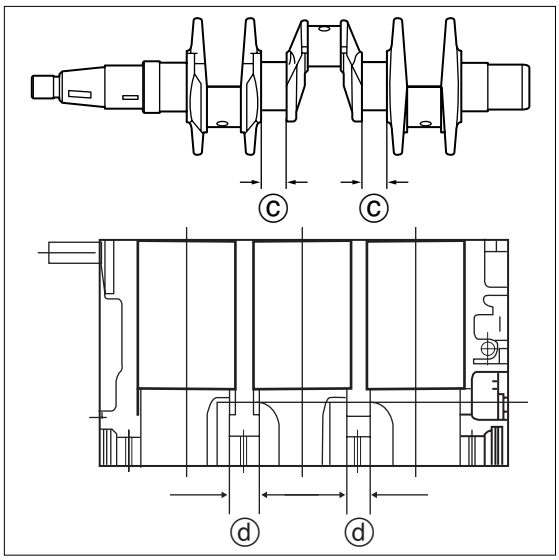

33) Inspection of Crank Pin Oil Clearance

1. Clean connecting rod.

2. Place cylinder block upside down on the work bench. Install piston to connecting rod ①.

   Do not attach piston rings.

3. Install crankshaft on the cylinder block.

4. Place plasti-gauge ③ on each crank pin ④ parallel to crankshaft.

   Do not place plasti-gauge ③ on the oil hole of crank pin ④.

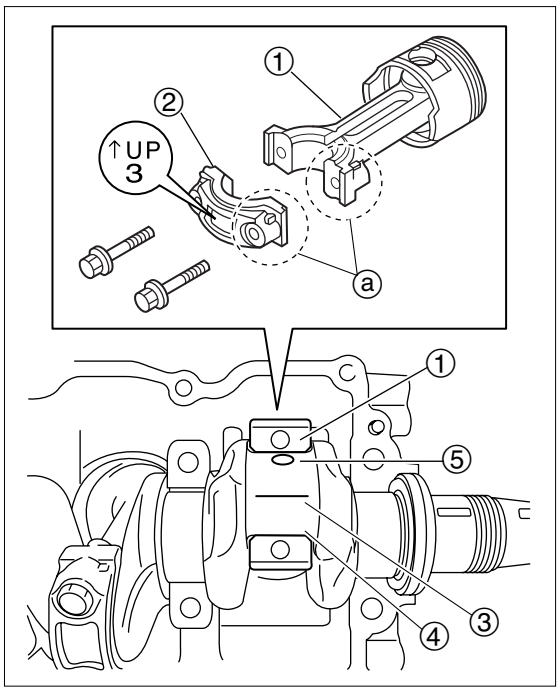

5. Install connecting rod and cap ② to crank pin ④.

   - Be sure that individual cap is installed to their original connecting rod.
   - Check that "UP" mark ⓑ of connecting rod is directed to crankshaft flywheel side.

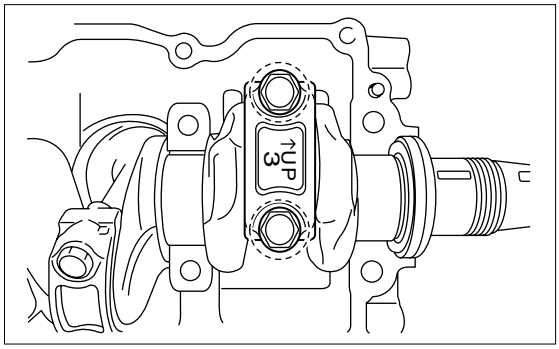

6. Tighten connecting rod bolts in two steps to specified torque.

   Do not move connecting rod and crankshaft until oil clearance measurement is completed.

   Connecting Rod Bolts :
   First Tightening Torque : 6 N·m (4 lb·ft) [0.6 kgf·m]
   Final Tightening Torque : 12 N·m (9 lb·ft) [1.2 kgf·m]

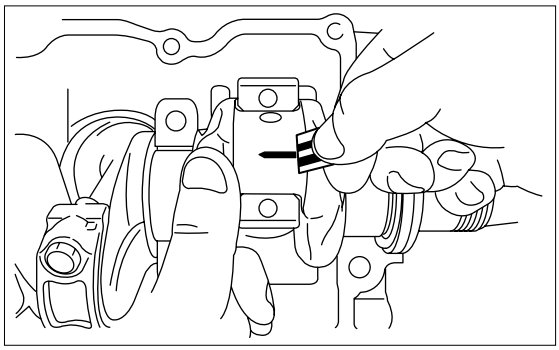

7. Remove connecting rod cap and measure width of crushed plasti-gauge on each crank pin. Replace connecting rod or crankshaft if the width is over specified value.

   Crank Pin Oil Clearance :
   0.010 to 0.036 mm (0.00039 to 0.00142 in)

   Functional Limit :
   0.060 mm (0.00236 in)

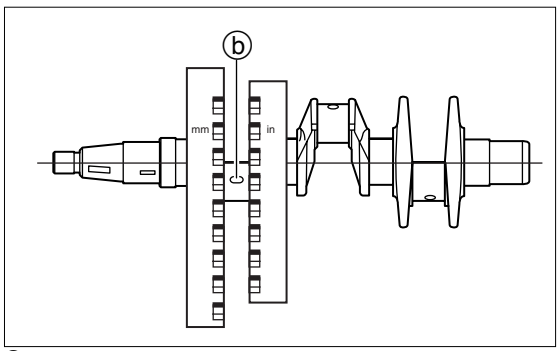

ⓑ Plasti-gauge

34) Inspection of Crank Shaft Main Journal Oil Clearance

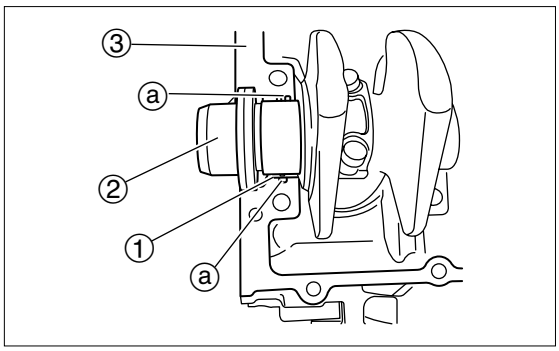

1. Clean bearings, crankshaft main journal, and bearing installation areas of crank case and cylinder block.

2. Place cylinder block on the work bench with cylinder head side facing downward.

3. Install bearing ① and crankshaft ② to cylinder block ③.

   - Be sure that individual bearings are installed to their original locations.
   - Install bearings with their projection ⓐ fit into cylinder block groove.

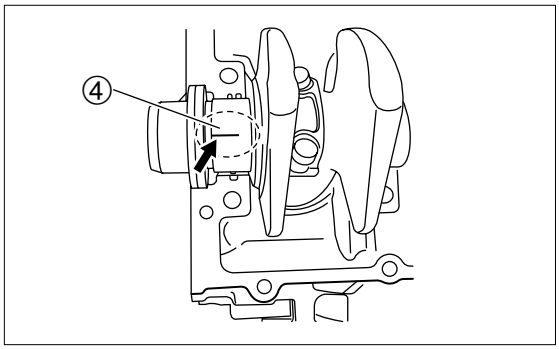

4. Place plasti-gauge ④ on each crankshaft main journal parallel to crankshaft.

   Do not place plasti-gauge on the oil hole of crankshaft main journal.

5. Install bearings to crank case.

   - Be sure that individual bearings are installed to their original locations.
   - Install bearings with their projection fit into crank case groove.

6. Install crank case to cylinder block.

7. Tighten crank case bolts in two steps to specified torque in the order shown.

   Crank Case Bolts (M8) : 1 ~ 8
   First Tightening Torque : 10 N·m (7 lb·ft) [1.0 kgf·m]
   Final Tightening Torque : 23.5 N·m (17 lb·ft) [2.4 kgf·m]
   Crank Case Bolts (M6) : 9 ~ 16
   First Tightening Torque : 6 N·m (4 lb·ft) [0.6 kgf·m]
   Final Tightening Torque : 11.5 N·m (8.5 lb·ft) [1.2 kgf·m]

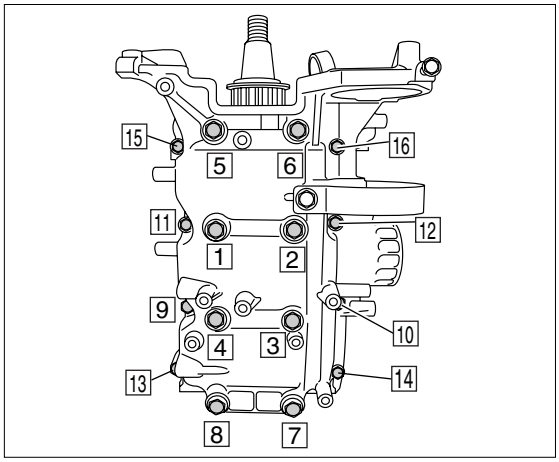

5

8. Loosen bolts in reverse order in several steps. Remove crank case and measure width of crushed plasti-gauge on each main journal. Replace bearing if the width is over specified value.

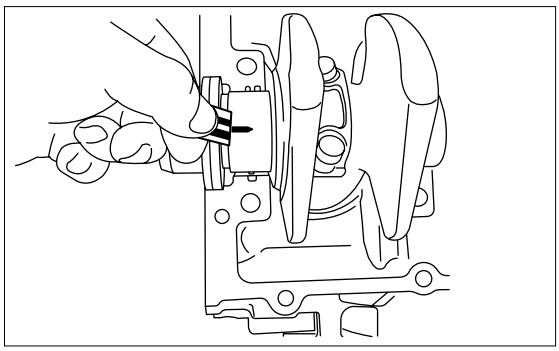

Crankshaft Main Journal Oil Clearance :
0.012 to 0.044 mm (0.00047 to 0.00173 in)

Functional Limit :
0.060 mm (0.00236 in)

If the clearance is less than specified value, check that inner diameter code is as shown below.

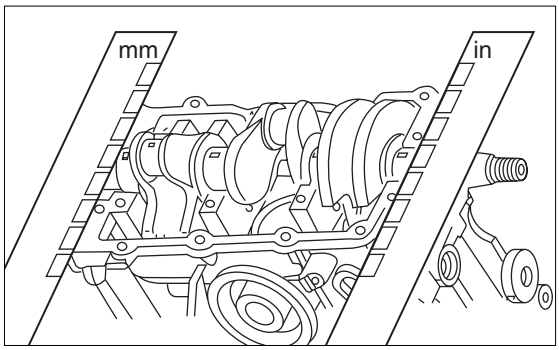

35) Inner Diameter of Cylinder/Crank Case Bearing Holder (Inner Diameter Code)

Cylinder is marked on its upper section with inner diameter code ① that indicates inner diameter of each bearing holder. There are two types of bearing in accordance with inner diameter code.

Inner Diameter Code ①	Standard Value	Bearing Coloring
A	39.000 to 39.008 mm (1.53543 to 1.53575 in)	Blue
B	39.008 to 39.016mm (1.53575 to 1.53606 in)	Red

Inner diameter codes A and B represents size of each bearing section.

Remarks : When cylinder/crank case is purchased as a part, fitting bearing comes with it.

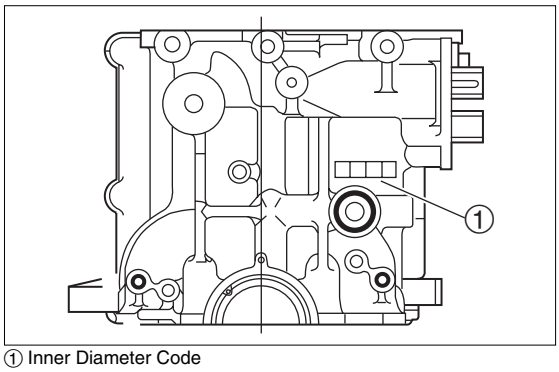

① Inner Diameter Code

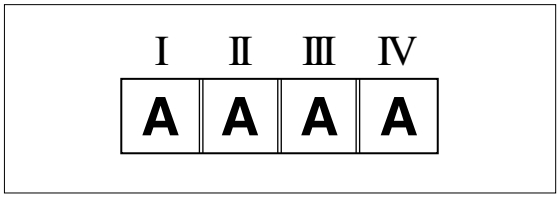

36) Thickness of Bearing (Color of Inner Diameter Code)

Bearing is painted with color ① that represents thickness. There are two types of bearing in accordance with coloring.

[Coloring (Inner Diameter Code)]	Thickness
Blue : A	1.488 to 1.494 mm (0.05858 to 0.05882 in)
Red : B	1.494 to 1.500 mm (0.05882 to 0.05906 in)

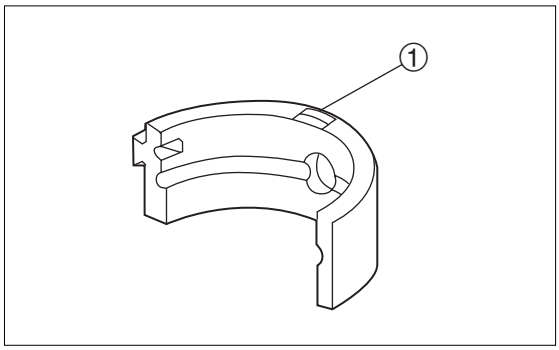

37) Assembling Piston and Connecting Rod

1. Install connecting ②, piston pin ③, and piston pin clip ④ to piston ①.

- Point "3RO-UP" mark of connecting rod ⓐ and "UP" mark ⓑ of piston at the same direction.
- Be sure to use new piston pin clip, and place clip gap away from piston pin groove ⓒ as shown.
- Be sure that individual connecting rod cap is installed to their original connecting rod.

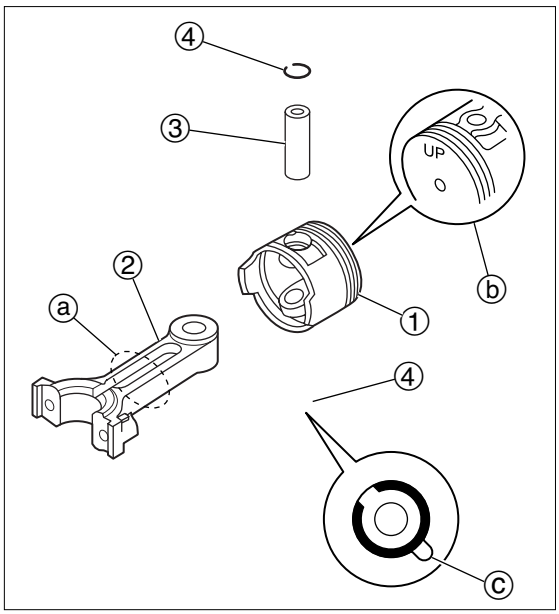

2. Put expander ⑤ (#4) into oil ring groove, and check that ring ends meets correctly as shown.

3. While holding expander ⑤ (#4) gap with thumb, put upper side rail (#3) into the groove so that the gap is away from gap of expander ⑤ (#4) to the left by 90 degrees.

4. In similar way, put lower side rail (#5) into the groove so that the gap is away from gap of expander ⑤ (#4) to the right by 90 degrees.

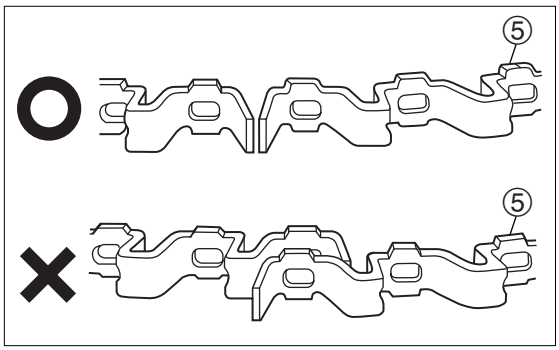

5. Install second ring (#2 taper) and top ring (#1) to piston. Install the rings so that their side with manufacturer's identification ⓓ (T) faces upward.

6. Install piston ring so that their gaps are away from each other.

⚠ CAUTION

Be careful not to scratch piston surface and damage rings.

- Install piston rings so that their gaps are away also from thrust direction of piston and direction piston pin.
- After installing piston rings, check that they move smoothly.

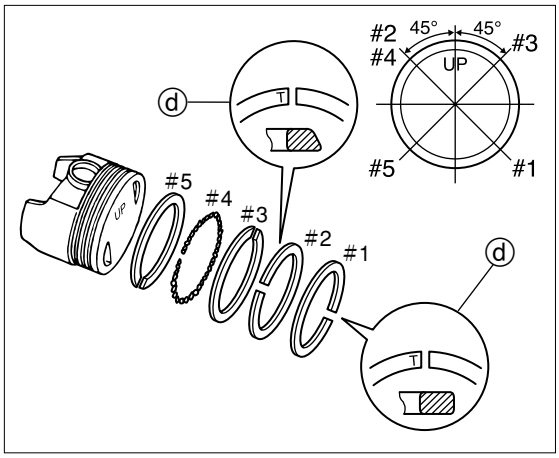

5

7. Put pistons into cylinder with piston crown ① "UP" mark directing flywheel side and piston slider ⑥ set on the pistons.

Before installing, apply engine oil to piston peripheral surfaces, piston rings and piston sliders.

Piston Slider ⑥ :
P/N. 3AC-72871-0

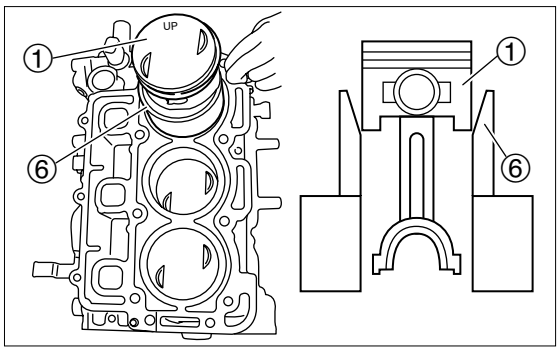

8. Install bearing half ⑦ to cylinder block ⑧.

- Be sure that individual bearings are installed to their original locations.
- Install bearings with their projection ⓔ fit into cylinder block groove.

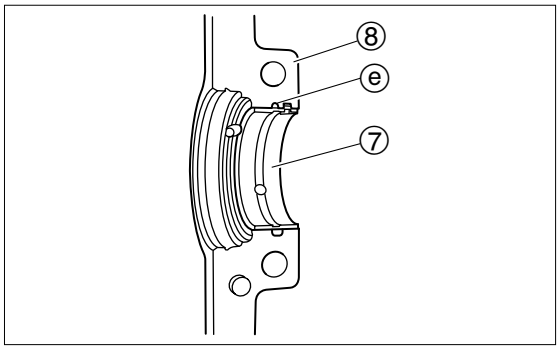

9. Apply engine oil to bearings and crankshaft.

10. Install crankshaft ⑨ and oil seals ⑩ and ⑪ on the cylinder block.

- Apply grease to lip of oil seal before installing it.
- Be sure that individual connecting rod cap is installed to their original connecting rod.

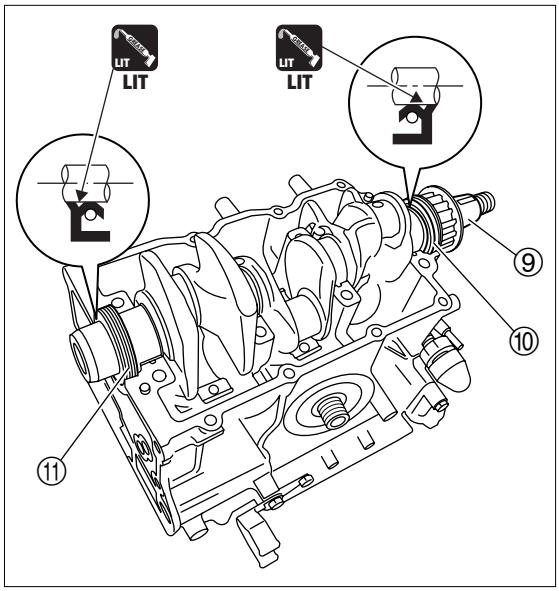

10. Attach connecting rod cap ⑫ to connecting rod, and tighten connecting rod bolts ⑬ in two steps to specified torque.

- Align mating marks ⓕ of connection rod cap and connecting rod with each other.

Connecting Rod Bolts ⑬ :
First Tightening Torque : 6 N·m (4 lb·ft) [0.6 kgf·m]
Final Tightening Torque : 12 N·m (9 lb·ft) [1.2 kgf·m]

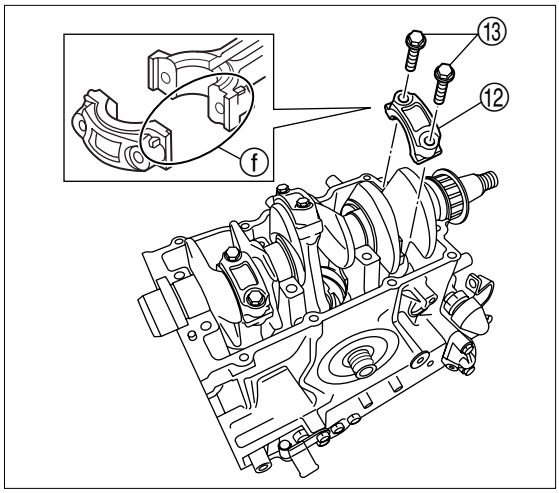

11. Install bearing half to crank case.

- Be sure that individual bearings are installed to their original locations.
- Install bearings with their projection fit into crank case groove.

12. Apply 4 stroke engine oil to bearings.

13. Apply sealing agent to mating surface of crank case (both sides, overall).

- Degrease mating surfaces of cylinder and crank case.
- Be careful not to allow sealing agent to adhere to bearing.
- Apply Three Bond 1141C to both sides and overall face of mating surfaces, taking care that no excessive agent protrudes.

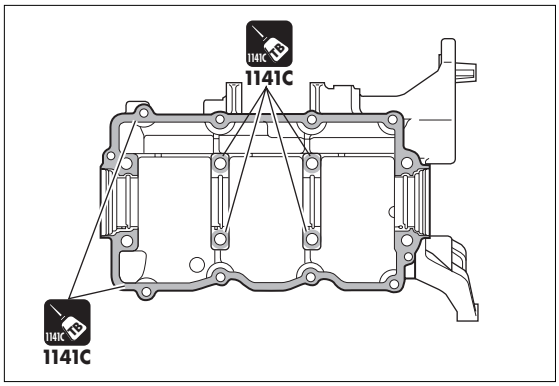

14. Install crank case to cylinder block.

15. Tighten crank case M8 bolts in two steps to specified torque in the order shown. Then, tighten M6 bolts in two steps to specified torque.

1 ~ 8 Crank Case Bolts (M8) :
First Tightening Torque : 10 N·m (7 lb·ft) [1.0 kgf·m]
Final Tightening Torque : 24 N·m (17 lb·ft) [2.4 kgf·m]
9 ~ 16 Crank Case Bolts (M6):
First Tightening Torque : 6 N·m (4 lb·ft) [0.6 kgf·m]
Final Tightening Torque : 12 N·m (8.5 lb·ft) [1.2 kgf·m]

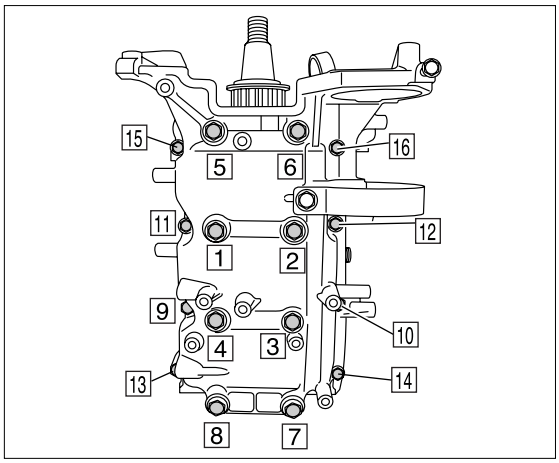

16. Put some engine oil into oil passage ⓖ of oil filter bolt before installing oil filter.

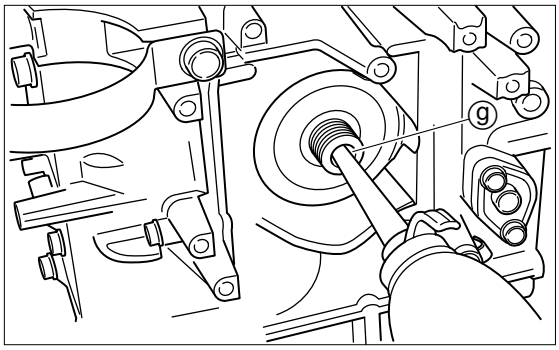

17. Install oil filter and tighten it to specified torque by using oil filter wrench.

Apply thin coat of engine oil to O-ring before installing oil filter.

Oil Filter Wrench :
P/N. 3AC-99090-0

Oil Filter :
18 N·m (13 lb·ft) [1.8 kgf·m]

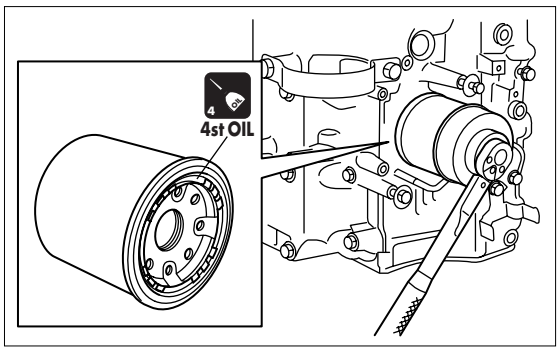

18. Install thermostat, new gasket and thermostat cover ⑭.

19. Install cylinder head.

For installation procedure, refer to "Installation of Cylinder Head".

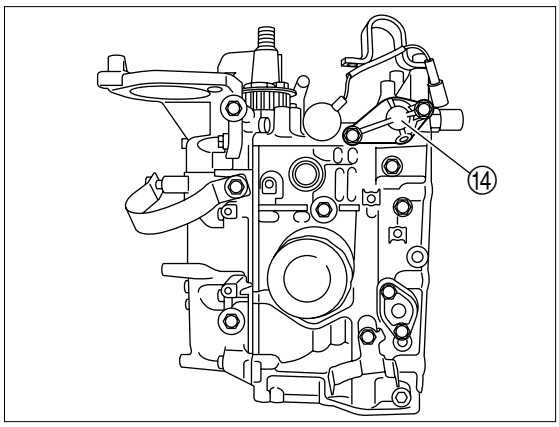

38) Installation of Power Unit

1. Clean power unit mating surface, and install dowel pin ① and gasket ②.

2. Install power unit ③, and tighten bolts ④ in two or three steps to specified torque.

> **Power Unit Installation Bolt :**
> 30 N·m (22 lb·ft) [3.0 kgf·m]

3. Install apron ⑤.

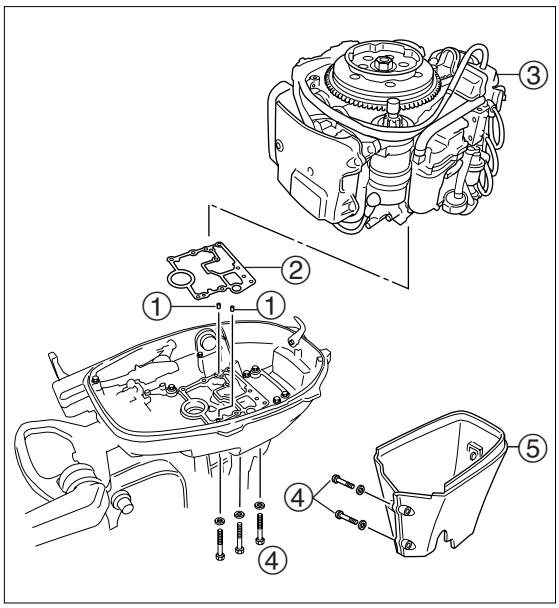

4. Reconnect breather hose ⑥, cooling water (fuel cooler) hose ⑦ and fuel hose ⑧.

5. Install oil level gauge ⑨.

6. Reconnect throttle link rod ⑩. For the adjustment procedure, refer to sections describing adjustment of throttle link and throttle cable and inspection of gear shift operation in Chapter 3.

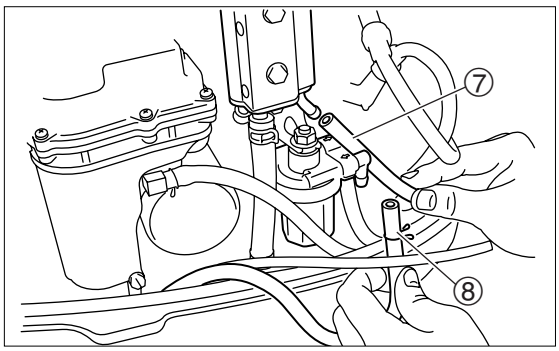

7. Apply grease to sliding parts such as links and cables.

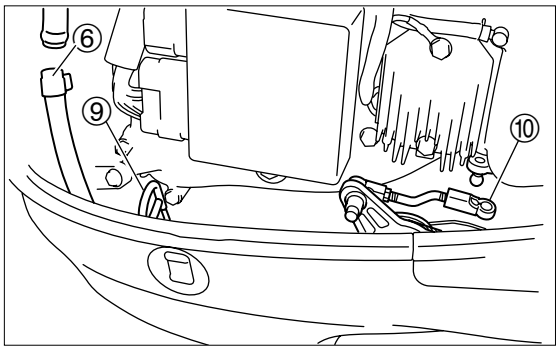

8. Install PTT switch coupler, PTT motor leads ⑪ and battery cables ⑫.

> **Positive Battery Cable Nut :**
> 4 N·m (3 lb·ft) [0.4 kgf·m]
> **PTT Motor Lead Bolt :**
> 4 N·m (3 lb·ft) [0.4 kgf·m]

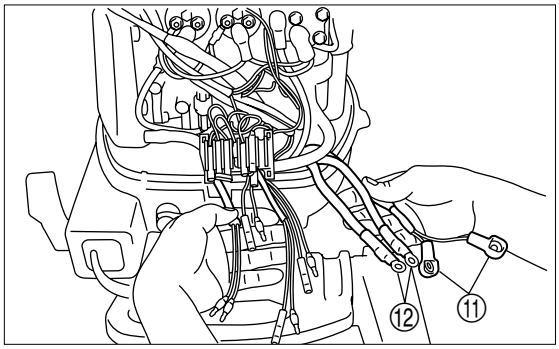

8. Reconnect warning lamp, start switch and stop switch. (Tiller Handle Model)

9. Reconnect remote control harness coupler. (Remote Control Model)

10. Install key and flywheel.

⚠ CAUTION

Apply forces to tools toward directions as shown, and perform work taking care not to allow flywheel holder to remove.

Flywheel Holder :
P/N. 3AC-99200-0

Flywheel Nut :
150 N·m (108 lb·ft) [15.0 kgf·m]

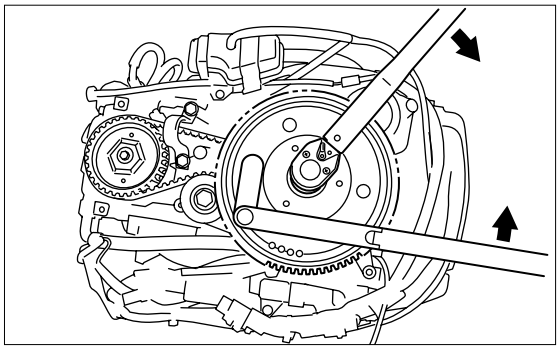

11. Reinstall recoil starter and belt cover.

12. Reconnect upper and lower starter lock cables.

13. Fill with specified amount of engine oil.

Recommended Engine Oil :
4 Stroke Engine Oil
API : SE, SF, SG, SH, SJ, SL
SAE : 10W-30 , 10W-40
NMMA : FC-W Certified 10W-30

Quantity of Engine Oil:
When oil filter is not replaced : 1.6L
When oil filter is replaced : 1.8L

39) Removing Recoil Starter

Adjustment of Starter Lock Cable

1. Shift gear into neutral (N).
2. Check that maximum diameter section of slide ① is at neutral start mark ②.
3. If not, adjust lower side of cable.
4. Perform shift operation to check that recoil starter is locked at other than neutral (N) position.

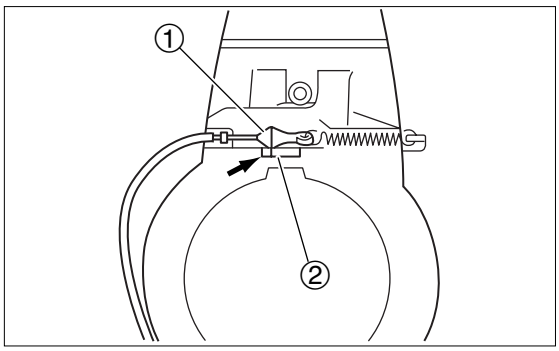

① Slide
② Neutral Start Mark

40) Disassembly of Recoil Starter

1. Disconnect upper starter lock cable.
2. Remove bolt, and then, recoil starter and belt cover.

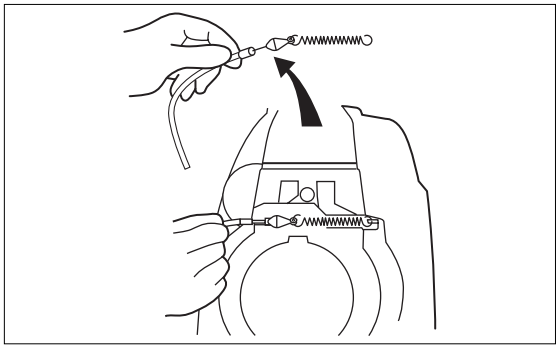

3. Put rope in the groove of reel ① and gently turn reel ① clockwise to release tension of starter spring.

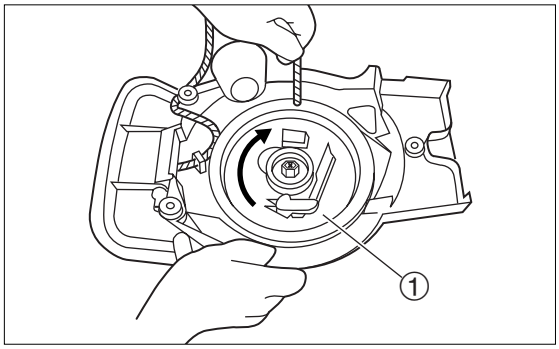

① Reel

4. Remove start shaft bolt ④, and then, friction plate ③ and spring ②.
5. Take out reel carefully.

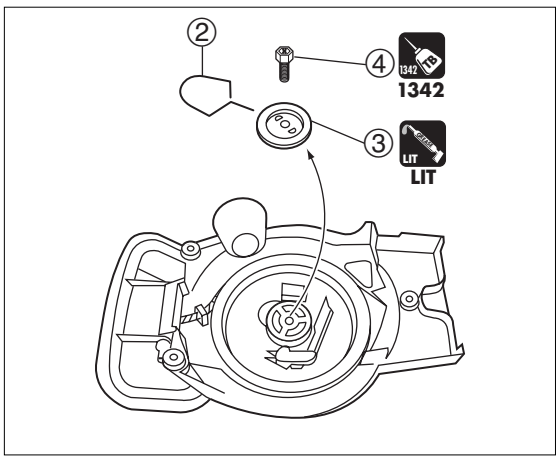

② Friction Spring
③ Friction Plate
④ Starter Shaft Bolt

6. Remove E-ring ⑤, and then, ratchet ⑦, ratchet guide ⑧, and return spring ⑨.

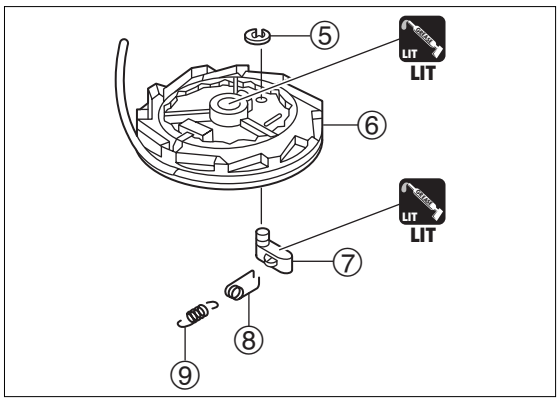

⑤ E-Ring
⑥ Reel
⑦ Ratchet
⑧ Ratchet Guide
⑨ Return Spring

7. Remove starter spring ⑫.

> It is not necessary to remove starter spring from starter case if it is not necessary to replace it. Starter spring can be inspected without removing from starter case.

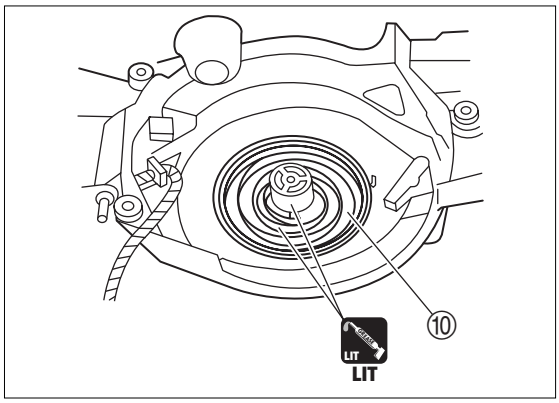

⑩ Starter Spring

41) Inspection of Recoil Starter

1. Check ratchet, starter lock and all springs. Replace if any deformation, wear or damage is found.

2. Check reel and starter case. Replace if any crack or damage is found.

3. Check starter rope. Replace if any wear, unraveling or damage is found.

42) Installation of Recoil Starter

Reverse disassembly procedure to assemble by taking care of the following matters.

- When setting starter spring into starter case, face starter spring outer edge hook to the right and set it into peripheral cut of starter case.

- Run starter rope through rope guide ①.

- When installing reel into starter case, set projection of reel in the internal hook of starter spring.

- Apply cold resistance lithium grease to the following parts.
  - Starter Spring
  - Reel Center Hole
  - Ratchet
  - Starter Lock
  - Friction Plate

- Apply "Three Bond" 1342 to starter shaft bolt, and tighten the bold to specified torque.

Starter Shaft Bolt :
6 N·m (4 lb·ft) [0.6 kgf·m]

- When applying tension to starter spring, turn reel 4 to 5 times to direction to which the reel rotates when pulling out starter rope (counterclockwise) .

- Perform shift operation to check that recoil starter is locked at other than neutral (N) position.

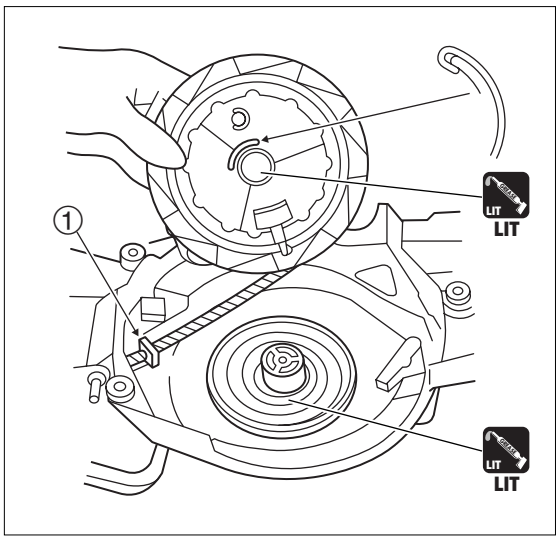

① Rope Guide

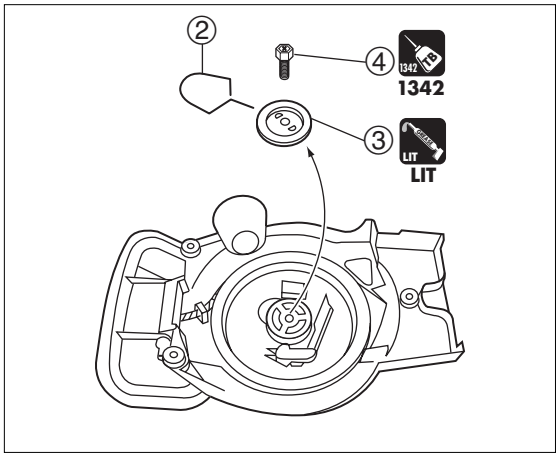

② Friction Spring
③ Friction Plate
④ Starter Shaft Bolt

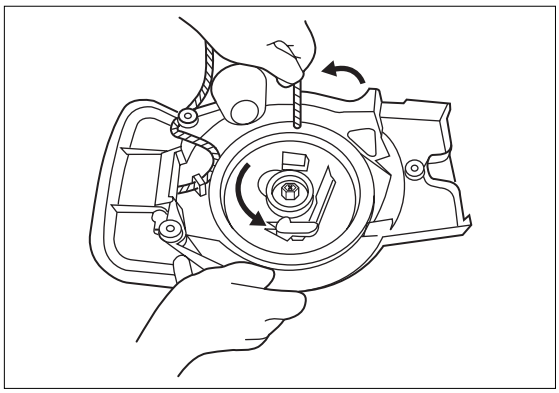

5

6

Lower Unit

1 Special Tools ····· 6-2
2 Parts Layout ····· 6-4
Gear Case ····· 6-4
Drive System & Water Pump ····· 6-5
Shift ····· 6-7
3 Inspection Items ····· 6-8
1) Draining Gear Oil ····· 6-8
2) Removing Propeller ····· 6-8
3) Removing Lower Unit ····· 6-9
4) Disassembly of Water Pump ····· 6-9
5) Inspection of Water Pump ····· 6-10
6) Removing Propeller Shaft Housing Ass'y ··· 6-10
7) Disassembly of Propeller Shaft Ass'y ····· 6-11
8) Inspection of Propeller Shaft ····· 6-11
9) Assembly of Propeller Shaft Ass'y ····· 6-11
10) Disassembly of Propeller Shaft Housing ··· 6-12
11) Inspection of Propeller Shaft Housing ····· 6-13
12) Assembly of Propeller Shaft Housing ····· 6-14
13) Removing Pump Case (Lower) ····· 6-15
14) Disassembly of Pump Case (Lower)····· 6-15
15) Assembly of Pump Case (Lower) ····· 6-15
16) Removing Clutch Cam and Cam Rod ····· 6-15
17) Disassembly of Clutch Cam and Cam Rod ··· 6-15
18) Inspection of Cam Rod and Clutch Cam ··· 6-16
19) Assembly of Cam Rod and Clutch Cam··· 6-16
20) Removing Drive Shaft ····· 6-16
21) Disassembly of Drive Shaft ····· 6-16
22) Inspection of Drive Shaft ····· 6-17
23) Disassembly of Forward Gear (A Gear)··· 6-17
24) Inspection of Pinion Gear (B Gear) and Forward Gear (A Gear) ····· 6-17
25) Assembly of Forward Gear (A Gear) ··· 6-17
26) Assembly of Drive Shaft ····· 6-18
27) Disassembly of Gear Case ····· 6-18
28) Inspection of Gear Case ····· 6-19
29) Assembly of Lower Unit····· 6-19
30) Installation of Pinion Gear (B Gear) ··· 6-20
31) Settling Pinion Gear (B Gear) Height ··· 6-21
32) Settling Forward Gear (A Gear) Backlash··· 6-24
33) Reassembly of Pinion Gear Nut (B Gear Nut) ··· 6-27
34) Assembly of Propeller Shaft Housing ··· 6-27
35) Reassembly of Pump Case (Lower) ··· 6-28
36) Assembly of Water Pump ····· 6-28
37) Installation of Lower Unit ····· 6-30

1.Special Tools

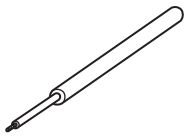	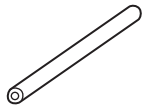	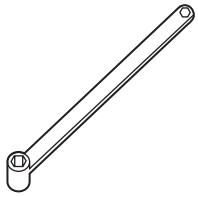	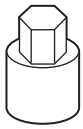
Spring Pin Tool A P/N. 345-72227-0	Spring Pin Tool B P/N. 345-72228-0	Bevel Gear B Nut Wrench P/N. 346-72231-0	Bevel Gear B Nut Socket P/N. 346-72232-0
Removing spring pin	Installing spring pin	Removing/installing Pinion Nut (B Gear Nut)	
	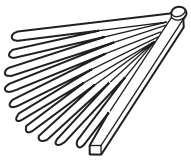	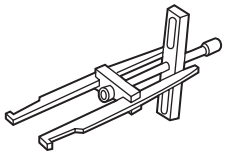	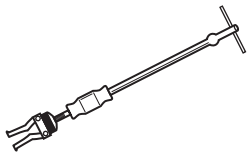
Bevel Gear Bearing Installation Tool P/N. 346-72719-0	Thickness Gauge P/N. 353-72251-0	Bevel Gear Bearing Puller Ass'y P/N. 3A3-72755-0	Slide Hammer Kit P/N. 3AC-99080-0
Installing forward gear (A gear) bearing	Measuring gaps	Removing forward gear (A gear) bearing outer race	Removing forward gear (A gear) bearing outer race
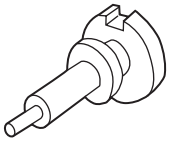	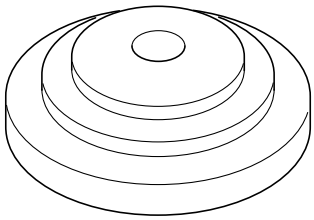		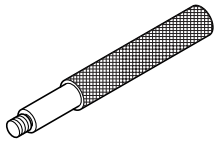
Shimming Gauge P/N. 3AC-99250-0	Center Plate P/N. 3AC-99701-0		Driver Rod P/N. 3AC-99702-0
Measuring pinion gear (B gear) height	Used with driver rod and needle bearing attachment Positioning propeller shaft housing needle bearing		Used with center plate and needle bearing attachment
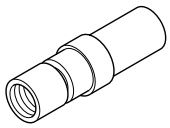		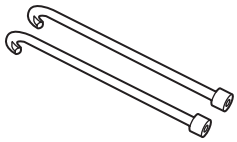	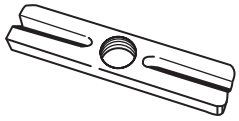
Needle Bearing Attachment P/N. 3AC-99710-0		Puller Claw P/N. 3AC-99736-0	Puller Plate P/N. 3AC-99737-0
Used with driver rod and center plate Installing propeller shaft housing needle bearing		Removing propeller shaft housing	

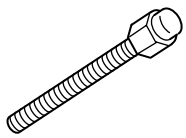	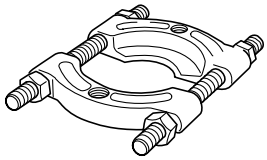	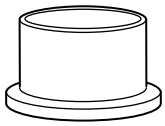	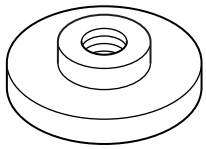
Center Bolt P/N. 3AC-99738-0	Universal Puller Plate P/N. 3AC-99750-0	Bearing Installation Tool P/N. 3AC-99900-0	Bearing attachment P/N. 3AC-99905-0
Removing propeller shaft housing	Removing reverse gear/bearing	Installing drive shaft bearing	Used with driver rod Attaching reverse gear (C gear) bearing
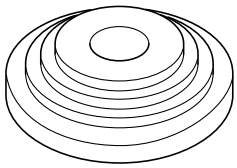		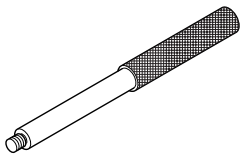	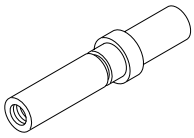
Center Plate 2 P/N. 3AD-99701-0		Driver Rod 2 P/N. 3AD-99702-0	Needle Bearing Attachment 2 P/N. 3AD-99710-0
Used with driver rod and needle bearing attachment Positioning pinion gear (B gear) needle bearing		Used with center plate and needle bearing attachment	Used with driver rod and center plate Installing/removing pinion gear (B gear) needle bearing
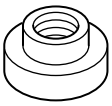	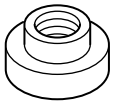	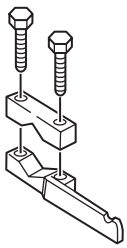	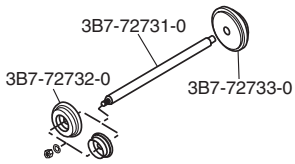
Oil Seal Attachment 2 P/N. 3AD-99820-0	Oil Seal Attachment 3 P/N. 3AG-99820-0	Backlash Measuring Tool Clamp P/N. 3B7-72720-0	Bearing Outer Press Kit P/N. 3B7-72739-0
Used with driver rod Installing oil seal in the propeller shaft housing	Installing pump case (lower) oil seal	Measuring backlash	Installing forward gear (A gear) bearing outer race
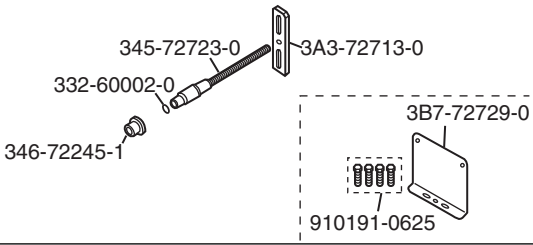			
Backlash Measuring Tool Kit P/N. 3C8-72234-0			
Measuring gap between forward and pinion gears (A and B gears)			

6

2.Parts Layout

P/L Fig. 14

Gear Case

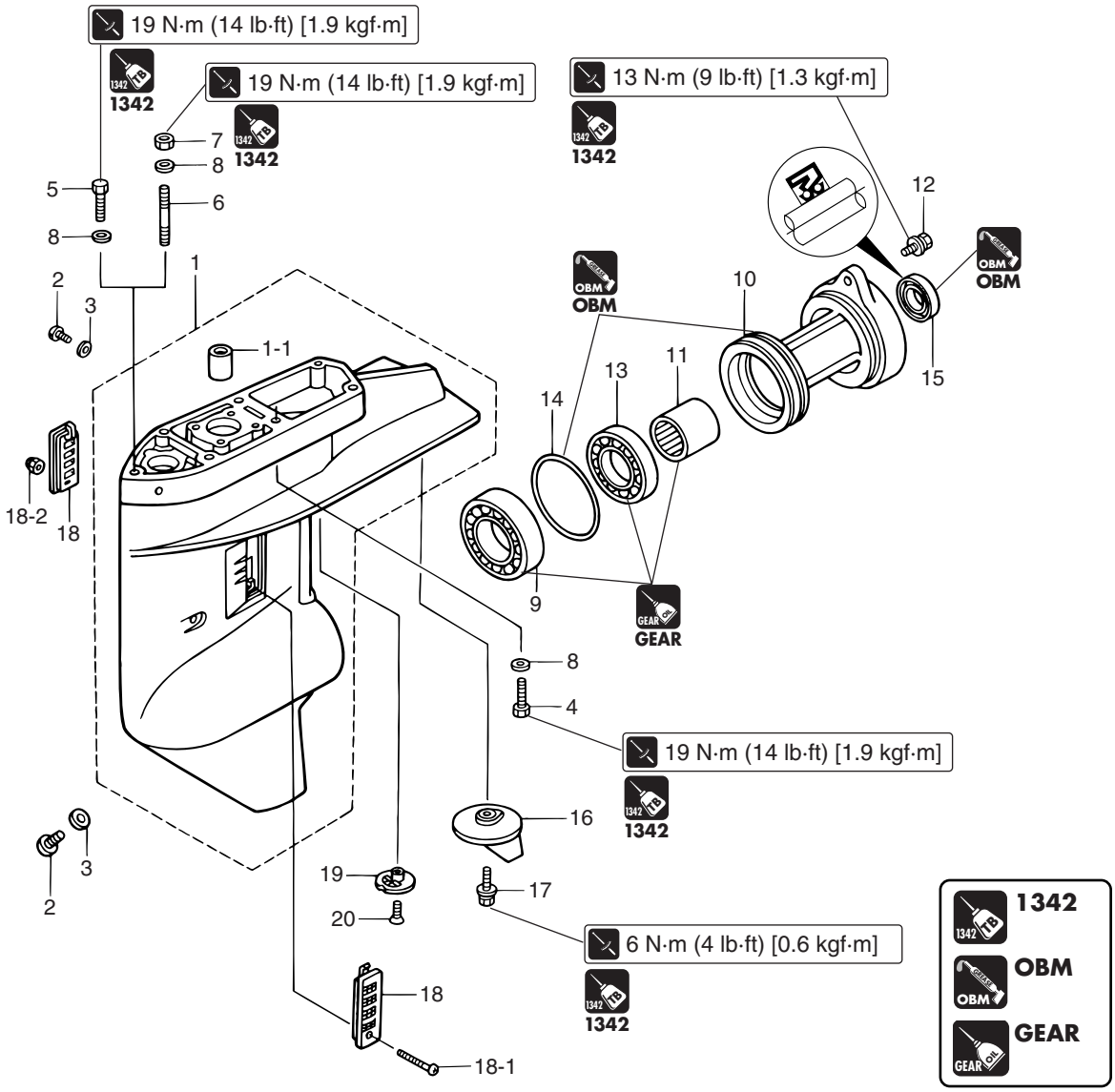

Ref. No.	Description	Q'ty	Remarks
1	Gear Case	1	
1-1	Needle Bearing, 20-27-30	1	
2	Oil Plug	2	
3	Gasket, 8.1-15-1	2	
4	Bolt	4	M8 L=40mm
5	Bolt	1	for "L" and "UL", M8 L=45 mm
6	Stud Bolt	1	for "S", M8 L=30 mm
7	Nut	1	for "S"
8	Washer	5	
9	Bearing, 30205	1	
10	Propeller Shaft Housing	1	
11	Needle Bearing, 18-25-25	1	
12	Bolt	2	M8 L=30mm
13	Ball Bearing, 6205	1	
14	O Ring, 3-62.5	1	Do not reuse.
15	Oil Seal, 18-28-8	1	Do not reuse.
16	Trim Tab	1	
17	Bolt	1	M6 L=20mm
18	Water Strainer Set	1	
18-1	Screw	1	
18-2	Nylon Nut, 4P-0.7	1	
19	Sub Water Strainer	1	
20	Screw	1	
21	Propeller Shaft Housing Ass'y	1	

Drive System & Water Pump

P/L Fig. 15

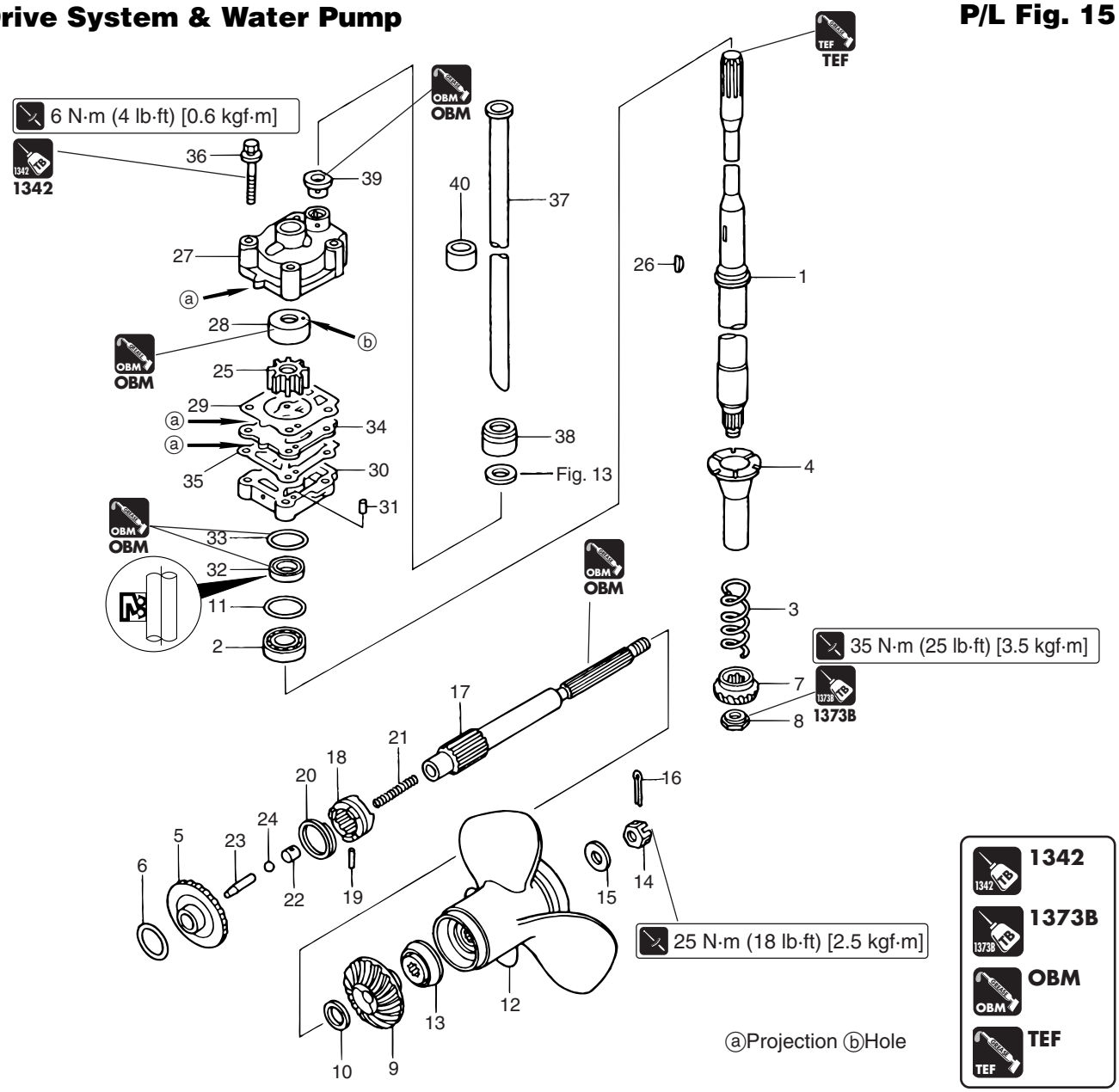

Ref. No.	Description	Q'ty	Remarks
1	Drive Shaft "S"	1	
	Drive Shaft "L"	1	
	Drive Shaft "UL"	1	
2	Bearing, 32004	1	
3	Drive Shaft Spring	1	
4	Drive Shaft Spring Guide	1	
5	Forward Gear (A Gear)	1	
6	Shim, 26.5-34.8-0.1	AR	
	Shim, 26.5-34.8-0.15	AR	
7	Pinion Gear (B Gear)	1	
8	Pinion Gear (B Gear) Nut	1	
9	Reverse Gear (C Gear)	1	
10	Washer, 18-24-1.5	1	
11	Shim, 35-41.9-0.1	AR	
	Shim, 35-41.9-0.15	AR	
	Shim, 35-41.9-0.3	AR	
	Shim, 35-41.9-0.5	AR	
12	Propeller 8, (3 x 10.2 x 8.3)	1	
	Propeller DS 9, (3 x 9.72 x 9.0)	1	
	Propeller DS 10, (3 x 9.72 x 10)	1	STD. Transom "UL"
	Propeller DS 11, (3 x 9.8 x 11.0)	1	STD. Transom "L"
	Propeller DS 12, (3 x 9.8 x 12)	1	
	Propeller DS 13, (3 x 9.6 x 13.0)	1	STD. Transom "S"
	Propeller 14, (3 x 9.9 x 14.2)	1	

Ref. No.	Description	Q'ty	Remarks
13	Propeller Thrust Holder	1	
14	Propeller Nut	1	
15	Washer, 12.5-32-2.5	1	
16	Split Pin, 3-22	1	Do not reuse.
17	Propeller Shaft	1	
18	Clutch	1	
19	Clutch Pin	1	
20	Clutch Pin Snap	1	Do not reuse.
21	Clutch Spring	1	
22	Clutch Spring Retainer	1	
23	Clutch Push Rod	1	
24	Steel Ball, 3/8	1	
25	Water Pump Impeller	1	
26	Water Pump Impeller Key	1	
27	Pump Case (Upper)	1	
28	Pump Case Liner	1	
29	Pump Case Gasket (Upper)	1	Do not reuse.
30	Pump Case (Lower)	1	
31	Dowel Pin, 4-10	2	
32	Oil Seal, 17-30-9	1	Do not reuse.
33	O Ring, 3.5-36	1	Do not reuse.
34	Water Pump Guide Plate	1	
35	Water Pump Guide Plate Gasket	1	Do not reuse.
36	Bolt	4	M6 L=52mm

Drive System & Water Pump

P/L Fig. 15

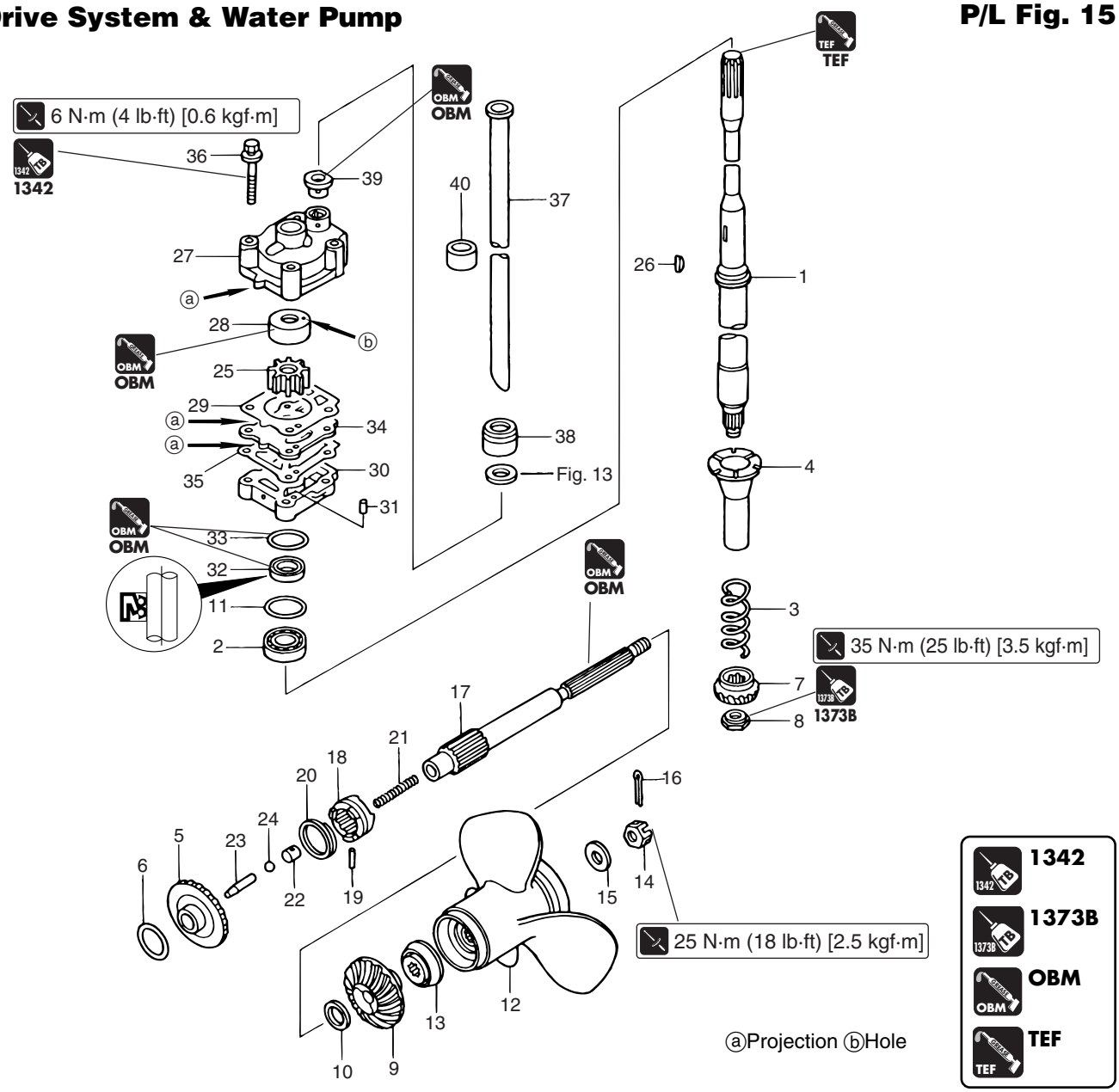

Ref. No.	Description	Q'ty	Remarks
37	Water Pipe "S"	1	
	Water Pipe "L"	1	
	Water Pipe "UL"	1	
38	Water Pipe Seal (Upper)	1	**Do not reuse.**
39	Water Pipe Seal (Lower)	1	**Do not reuse.**
40	Rubber Hose	1	Attach to location 240mm from tip. for "L"

Shift

P/L Fig. 16

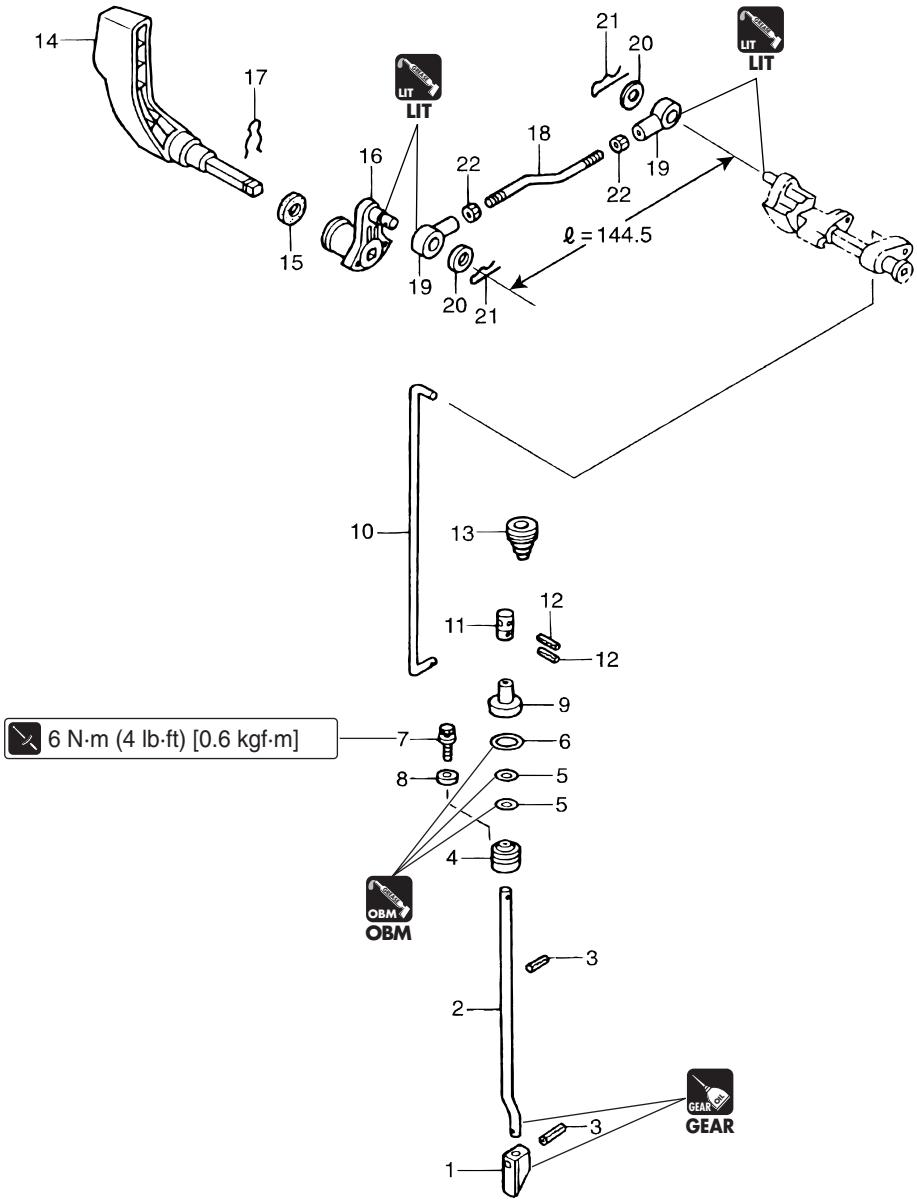

Ref. No.	Description	Q'ty	Remarks
1	Clutch Cam	1	
2	Cum Rod "S"	1	
	Cam Rod "L"	1	
	Cam Rod "UL"	1	
3	Spring Pin, 3-12	2	
4	Cam Rod Bushing	1	
5	O Ring, 2.4-5.8	2	Do not reuse.
6	O Ring, 3.5-21.7	1	Do not reuse.
7	Bolt	1	M6 L=12mm
8	Washer, 6-16-1.5	1	
9	Cam Rod Holder	1	for Transom "UL"
10	Shift Rod	1	
11	Shift Rod Joint	1	
12	Spring Pin, 3-12	2	Do not reuse.
13	Grommet, 17-3	1	※
14	Shift Lever	1	※
15	Seal Ring	1	※
16	Shift Arm "B"	1	※
17	Snap Retainer, d=8	1	※
18	Shift Lever Rod	1	※
19	Cable Joint	1	※
20	Washer, 8.5-18-1.6	2	※
21	Snap Pin, d=8	2	※
22	Nut	2	※

※ Tiller Handle Model

3. Inspection Items

1) Draining Gear Oil

1. Drain gear oil. Refer to "Replacement of Gear Oil" in Chapter 3.

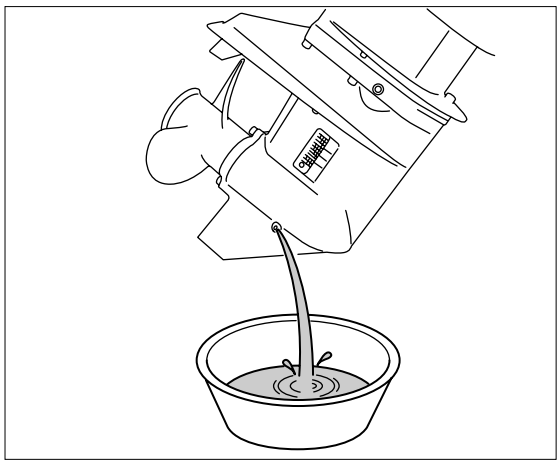

2) Removing Propeller

1. Shift gear into neutral (N).

2. Put a piece of wooden block between anti-cavitation plate and propeller ④ to prevent rotation of propeller, and remove propeller nut ② and then propeller.

⚠ WARNING

- **Before removing or installing propeller, be sure to disconnect battery cables from battery and remove stop switch lock plate.**
- **When removing or installing propeller, do not handle propeller with bare hands.**
- **Put a piece of wooden block between anti-cavitation plate and propeller ④ to prevent rotation of propeller.**

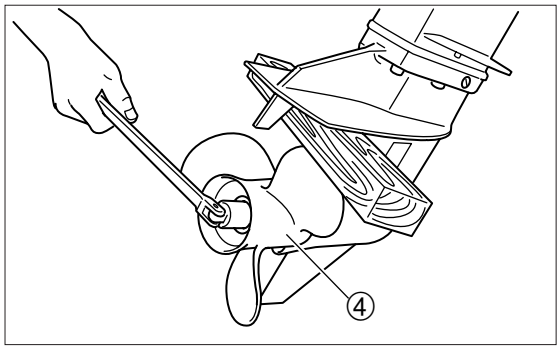

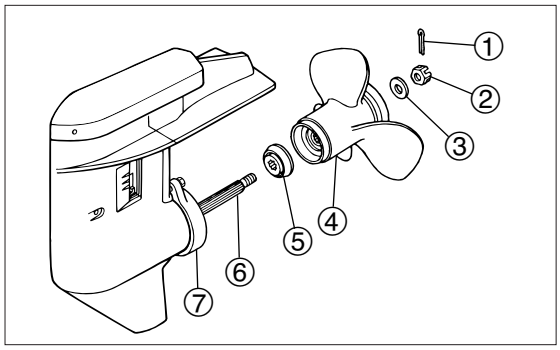

① Split Pin
② Propeller Nut
③ Washer
④ Propeller
⑤ Thrust Holder
⑥ Propeller Shaft
⑦ Propeller Shaft Housing

3) Removing Lower Unit

Removal of lower unit does not require removal of power unit from outboard motor body.

1. Remove spring pin and disconnect shift rod.

- Disconnect shift rod at lower side of shift rod joint ①.
- Use spring pin tool A ② to remove spring pin.
- Do not reuse removed spring pin.

Spring Pin Tool A ②:
345-72227-0

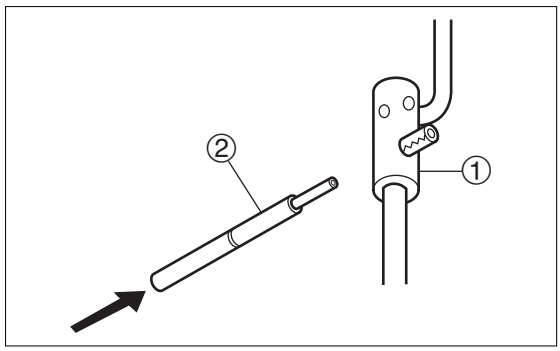

2. Remove lower unit installation bolts, and pull lower unit ass'y downward to remove.

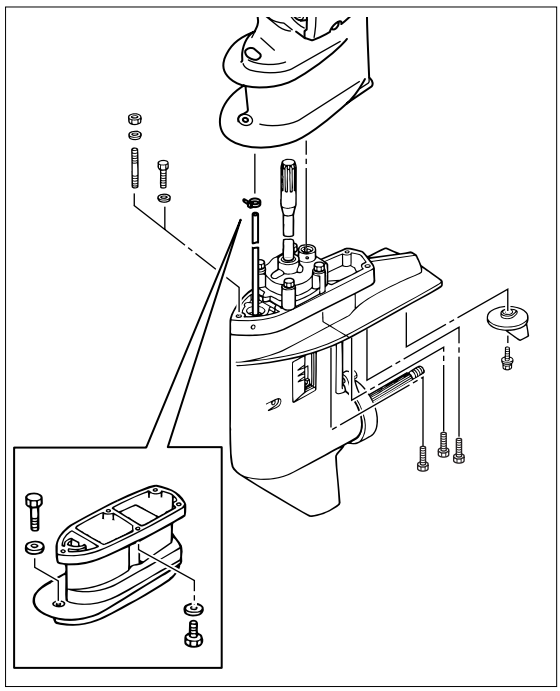

4) Disassembly of Water Pump

1. Remove pump case (Upper) ①.

2. Remove impeller ②.

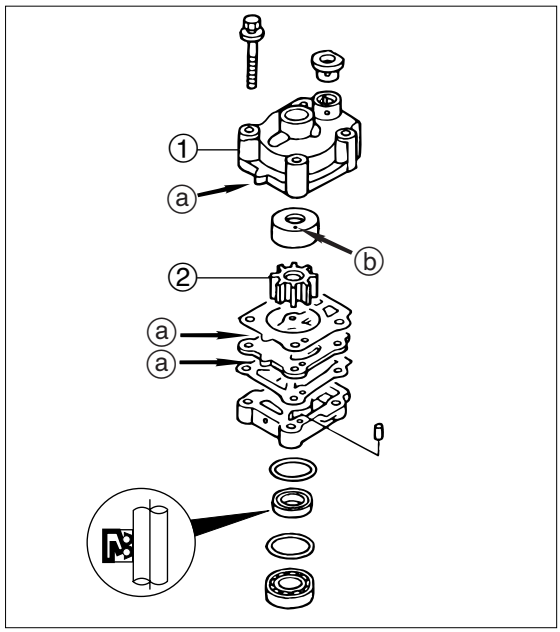

ⓐ Projection ⓑ Hole

5) Inspection of Water Pump

1. Check pump case (upper) ① for deformation. Replace if necessary.

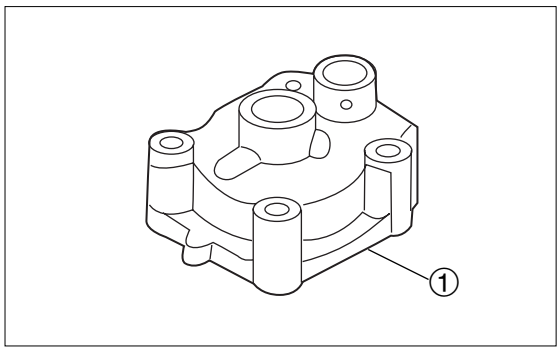

2. Check impeller ② and pump case liner ③ for crack and wear. Replace if necessary.

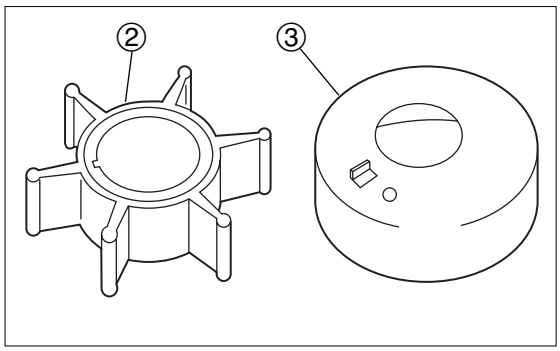

3. Check key ④, water pump guide plate ⑤ and drive shaft groove ⓐ for wear. Replace if necessary.

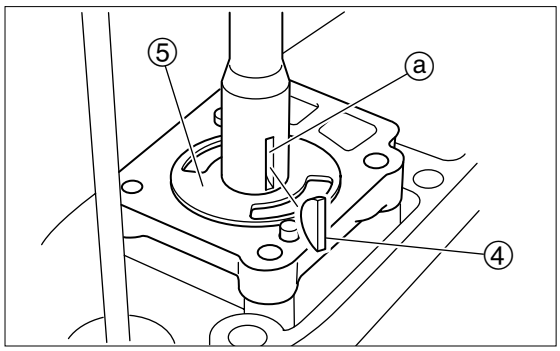

6) Removing Propeller Shaft Housing Ass'y

1. Remove bolts and pull out propeller shaft housing ass'y.

Puller Claw ① :
P/N. 3AC-99736-0
Puller Plate ② :
P/N. 3AC-99737-0
Center Bolt ③ :
P/N. 3AC-99738-0

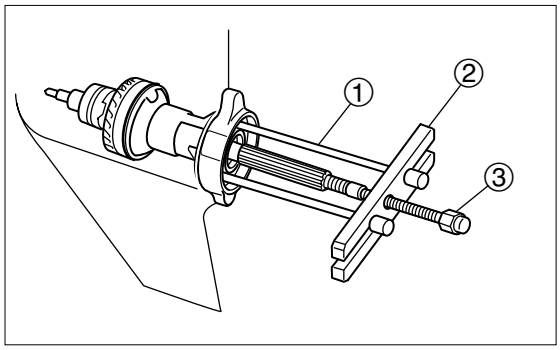

2. Remove propeller shaft ass'y.

7) Disassembly of Propeller Shaft Ass'y

1. Push small bladed screw driver into clutch pin snap ① to remove it while rotating propeller shaft. Then, push clutch pin ② lightly while apply preload to push rod ④ to pull out the pin. Remove clutch ③, push rod ④, spring retainer ⑤, and spring ⑥.

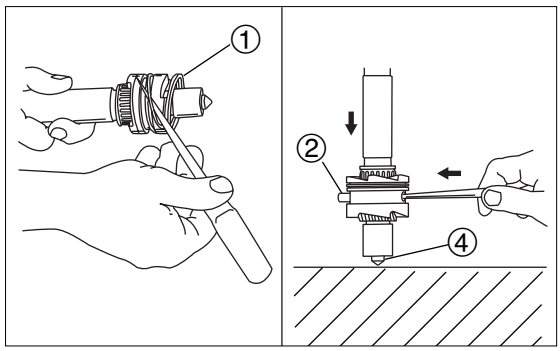

- Take care not to allow ball fly out by easing spring tension gradually.
- Do not reuse removed clutch pin snap.

2. Check clutch ③, spring retainer ⑤, ball, and push rod ④ for crack and wear. Replace if necessary.

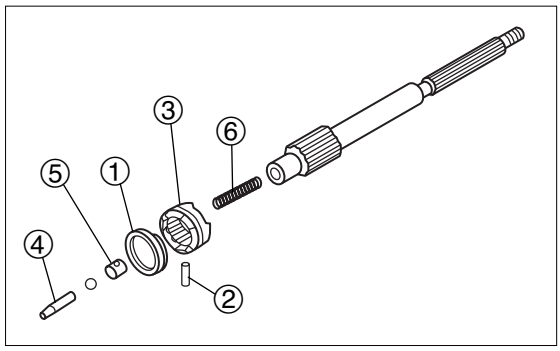

8) Inspection of Propeller Shaft

1. Check propeller shaft for bend and wear. Replace if necessary.

2. Measure cam shaft runout.

Runout Limit :
0.05 mm (0.0020 in)

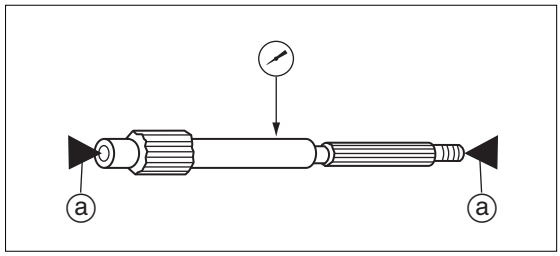

ⓐ Supporting Points

9) Assembly of Propeller Shaft Ass'y

1. Attach spring ⑥, spring retainer ⑤, ball, push rod ④, clutch ③ and clutch pin ② to propeller shaft.

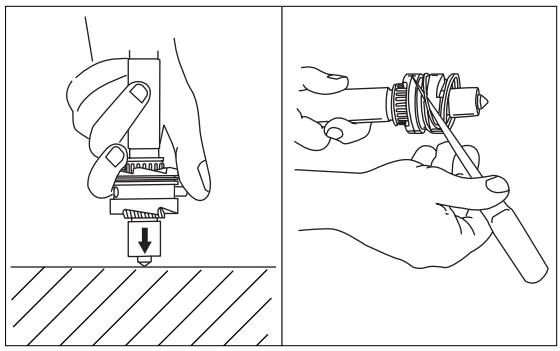

- Install clutch with groove ⓐ facing push rod side.
- Install clutch pin while applying preload to push rod.
- Be careful not to allow ball to fly out by spring tension.

2. Attach new clutch pin snap ① by using a small bladed screw driver to turn the snap spirally.

⚠ CAUTION

Do not reuse removed clutch pin snap.

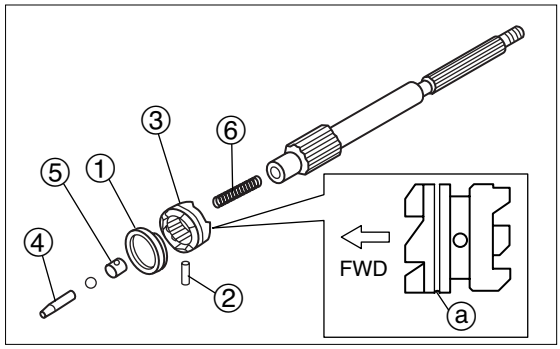

10) Disassembly of Propeller Shaft Housing

1. Tighten universal puller plate to make gap between reverse gear (C gear) and propeller shaft housing.

Universal Puller Plate :
P/N. 3AC-99750-0

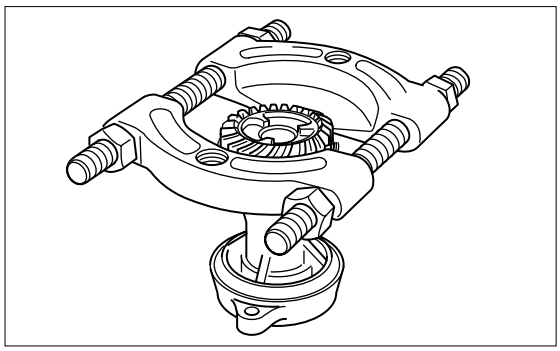

2. Remove reverse gear (C gear) ass'y by putting two bladed screw drivers into the gap to force the gap to open.

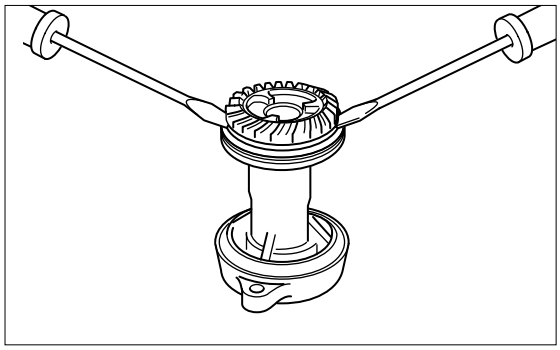

3. Use a press and suitable mandrel ① to remove ball bearing.

Before removing, check bearing for play or deflection. Replace if necessary.

⚠ CAUTION

Do not reuse removed bearing.

Universal Puller Plate :
P/N. 3AC-99750-0

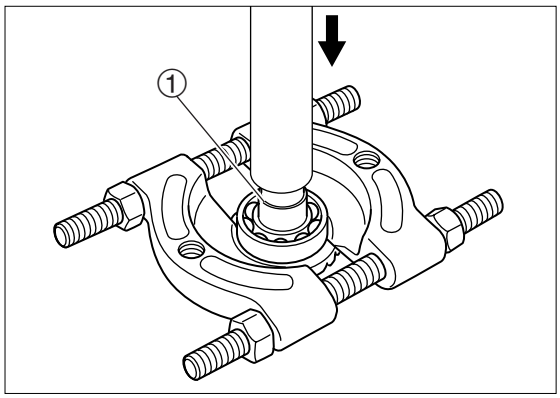

4. Use a press to remove oil seal ② and needle bearing ③ at the same time.

Before removing, check bearing for play or deflection. Replace if necessary. Direct attachment with side without O-ring to needle bearing.

⚠ CAUTION

Do not reuse removed bearing.

Needle Bearing Attachment ③ :
P/N. 3AC-99710-0
Driver Rod ④ :
P/N. 3AC-99702-0

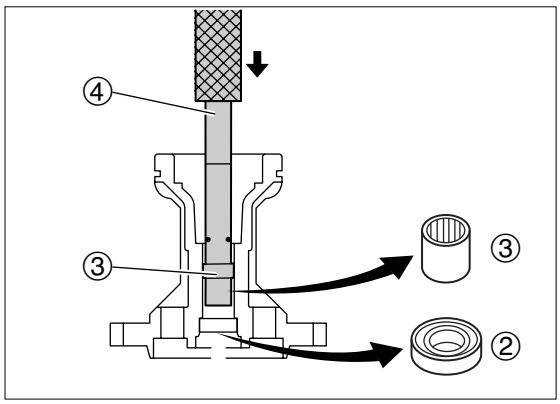

② Oil Seal **Do not reuse.**
③ Needle Bearing **Do not reuse.**

5. When removing only oil seal, use bladed screw driver to pry apart.

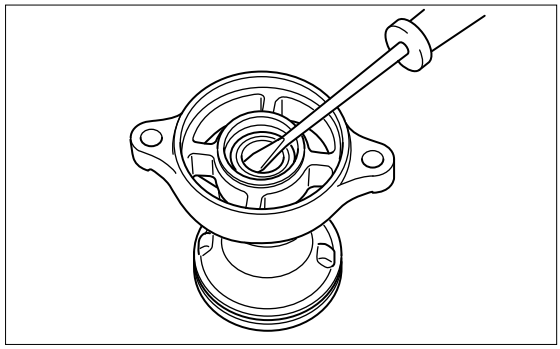

11) Inspection of Propeller Shaft Housing

1. Use cleaning oil and cleaning brush to clean propeller shaft housing, and check it for crack or damage. Replace if necessary.

2. Check reverse gear (C gear) teeth and clutch for crack or damage. Replace if necessary.

3. When reusing bearing without removing it, check it for play or deflection. Replace if necessary.

12) Assembly of Propeller Shaft Housing

1. Use a press to push new needle bearing into propeller shaft bearing to specified depth.

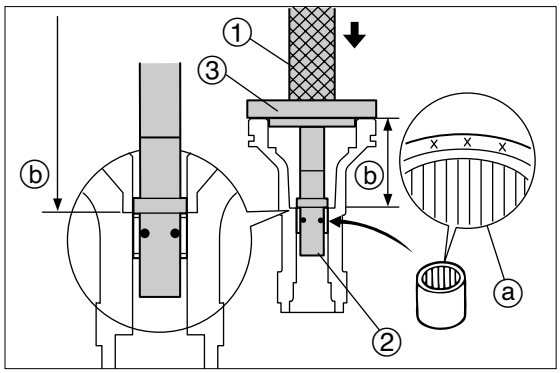

- Install needle bearing with manufacturer's marking ⓐ facing reverse gear (C gear) side.
- Screw needle bearing attachment ② into driver rod ① gently by using hand without making gap.

Driver Rod ① :
P/N. 3AC-99702-0
Needle Bearing Attachment ② :
P/N. 3AC-99710-0
Center Plate ③ :
P/N. 3AC-99701-0

Push In Depth ⓑ :
51.0 ±0.25 mm(2.008 ±0.010 in)

2. Apply engine oil to periphery of new oil seal, and install into propeller shaft housing with number side facing upward. Apply grease to lip of oil seal after installing it.

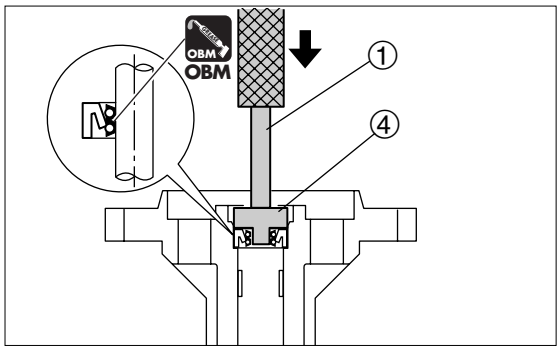

Driver Rod ① :
P/N. 3AC-99702-0
Oil Seal Attachment 2 ④ :
P/N. 3AD-99820-0

3. Use a press and suitable mandrel ⑧ to install new ball bearing ⑤ onto reverse gear (C gear).

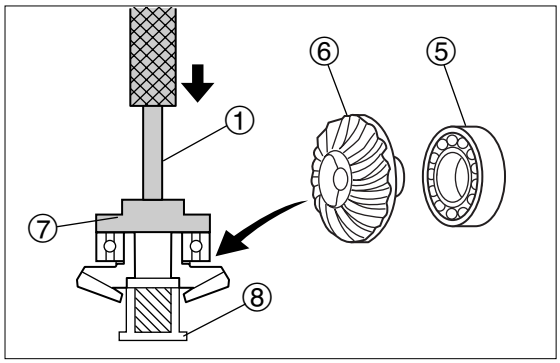

Driver Rod ① :
P/N. 3AC-99702-0
Bearing Attachment ⑦ :
P/N. 3AC-99905-0

4. Use a press and suitable mandrel ⑧ to install reverse gear (C gear) ass'y into propeller shaft housing.

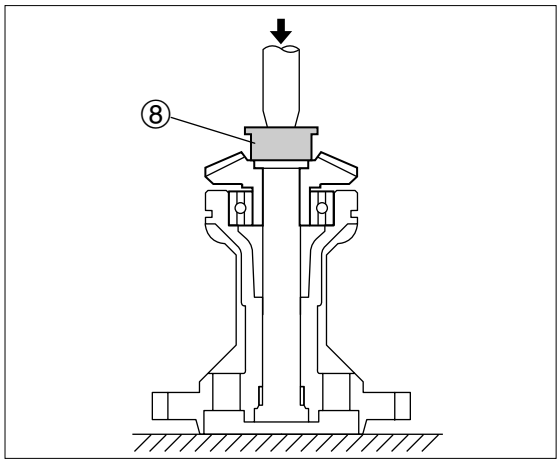

13) Removing Pump Case (Lower)

1. Remove pump case (lower).

14) Disassembly of Pump Case (Lower)

1. Use bladed screw driver to remove oil seal ①.

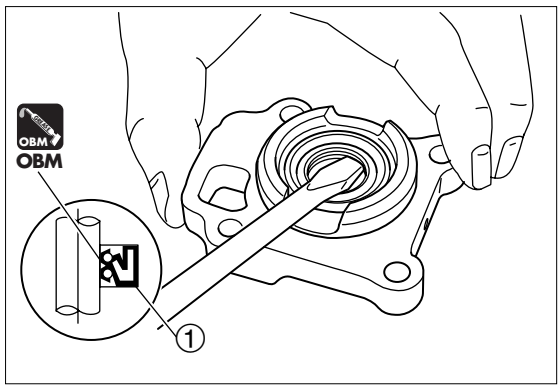

① Oil seal **Do not reuse.**

15) Assembly of Pump Case (Lower)

1. Apply engine oil to periphery of new oil seal, and install into pump case (lower) with number side facing downward.

> **Oil Seal Attachment 3 ① :**
> P/N. 3AG-99820-0
> **Driver Rod ② :**
> P/N. 3AC-99702-0

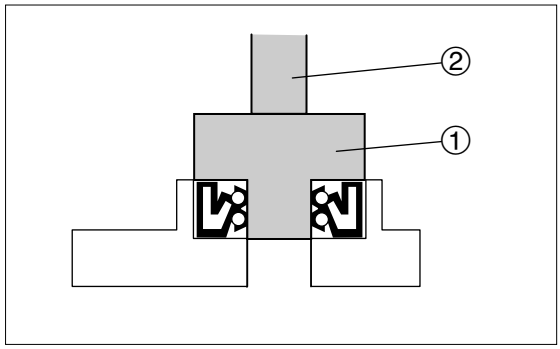

2. Apply OBM grease to lip of oil seal.

16) Removing Clutch Cam and Cam Rod

1. Remove cam bushing bolt ①, and cam rod ② ass'y upward to remove.

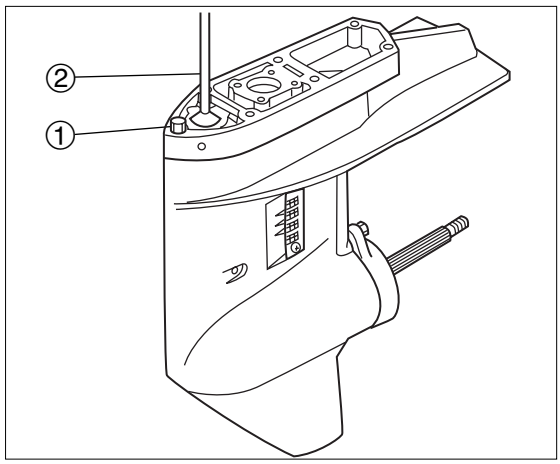

17) Disassembly of Clutch Cam and Cam Rod

1. Remove spring pin ②, clutch cam ③ and cam rod bushing from can rod ①.

> • Use spring pin tool A to remove spring pin.
> • Do not reuse removed spring pin.

> **Spring Pin Tool A :**
> P/N. 345-72227-0

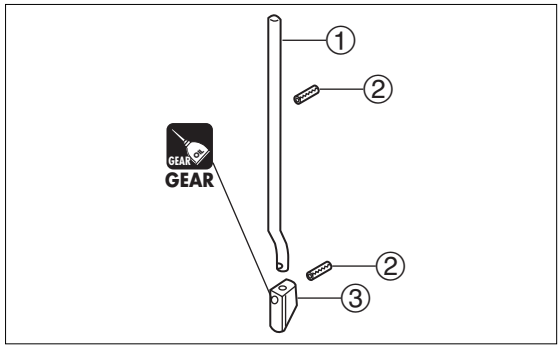

18) Inspection of Cam Rod and Clutch Cam

1. Check cam rod ① and clutch cam ② for crack and wear. Replace if necessary.

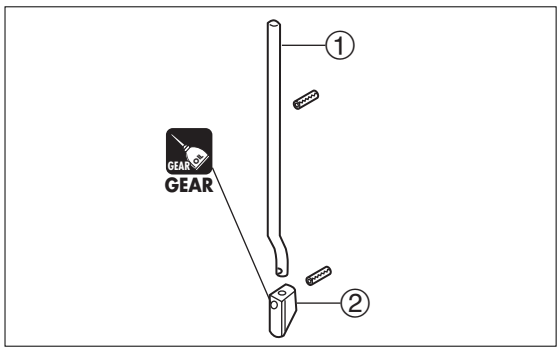

19) Assembly of Cam Rod and Clutch Cam

1. Reassemble.

Be careful of direction of cam rod.

20) Removing Drive Shaft

1. Remove pinion nut (B gear nut), remove drive shaft ass'y ① and pinion gear (B gear) ②, and draw out forward gear (A gear).

Bevel Gear B Nut Socket ③ :
P/N. 346-72232-0
Bevel Gear B Nut Wrench ④ :
P/N. 346-72231-0

- When removing drive shaft, be careful not to give damage to shim on the bearing outer race and not to lose the part. Shim is reusable.
- Replace shim with new one of the same thickness if any deformation or damage is found on the removed shim.

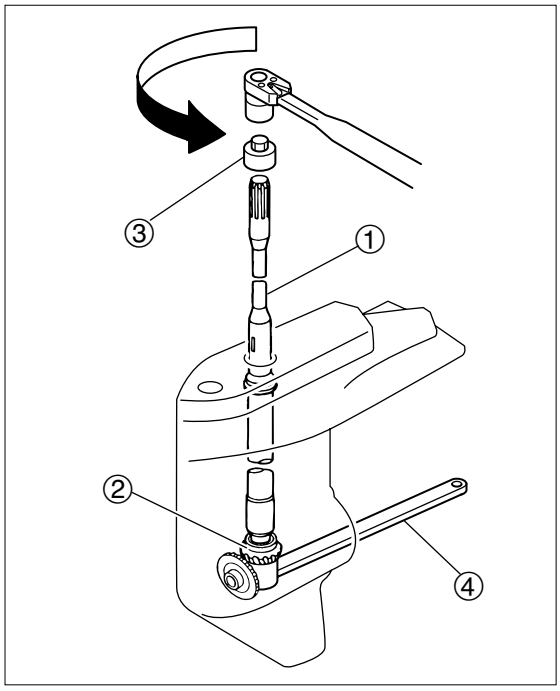

21) Disassembly of Drive Shaft

1. Remove drive shaft bearing ①.

Before removing, check bearing for play or deflection. Replace if necessary.

⚠ CAUTION

Do not reuse bearing. Be sure to replace with new one.

Universal Puller Plate ② :
P/N. 3AC-99750-0

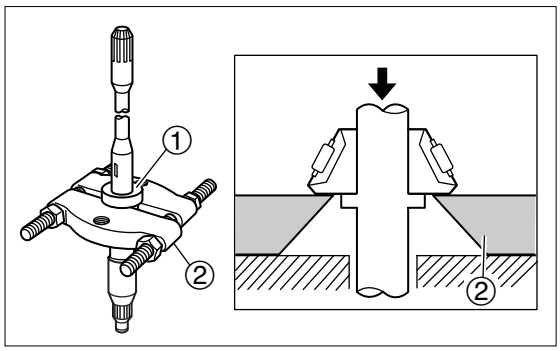

22) Inspection of Drive Shaft

1. Check drive shaft for bend and wear. Replace if necessary.

2. Measure drive shaft runout.

Runout Limit : 0.5 mm (0.020 in)

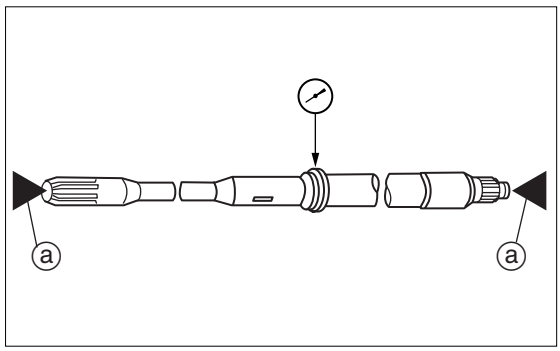

ⓐ Supporting Points

23) Disassembly of Forward Gear (A Gear)

1. Use two bladed screw driver to remove taper roller bearing from forward gear (A gear).

⚠ CAUTION

Do not reuse bearing. Be sure to replace with new one.

- Remove shim carefully not to damage it because it is reusable.
- Replace shim with new one of the same thickness if any deformation or damage is found on removed shim.
- Before removing, check bearing for play or deflection. Replace if necessary.

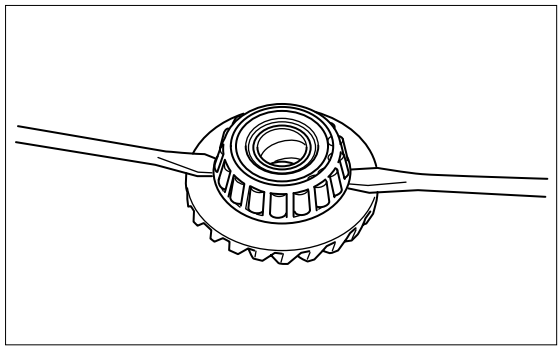

24) Inspection of Pinion Gear (B Gear) and Forward Gear (A Gear)

1. Check pinion gear (B gear) and forward gear (A gear) teeth and clutch for crack and wear. Replace if necessary.

2. Measure forward gear (A gear) bushing inner diameter ⓐ. If any wear is found, perform measurement of pinion gear (B gear) height carefully. If worn severely, replace gear with new one.

Forward Gear (A Gear) Bushing Inner Diameter ⓐ : Standard Value
17.03 to 17.05 mm (0.6705 to 0.6713 in)

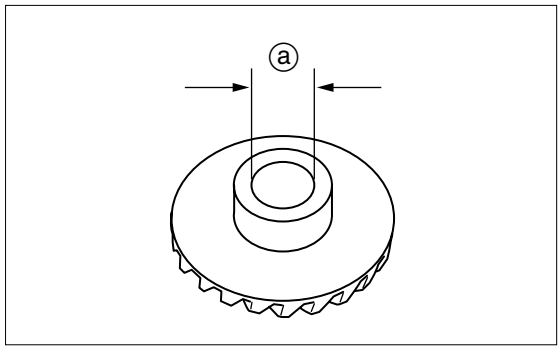

25) Assembly of Forward Gear (A Gear)

1. Attach removed shim or shim of the same thickness to forward gear (A gear).

2. Use a press to install new taper roller bearing to forward gear (A gear).

Bevel Gear Bearing Installation Tool ① :
P/N. 346-72719-0

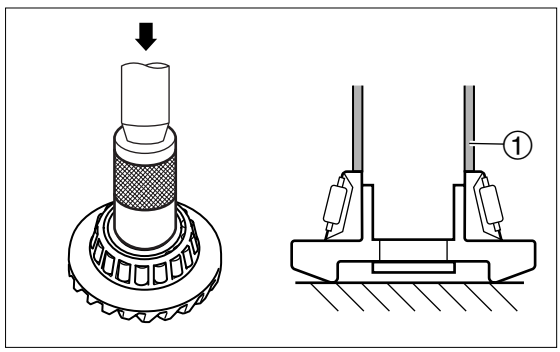

26) Assembly of Drive Shaft

1. Attach pinion nut (B gear nut) ① to drive shaft ② temporarily.

2. Use a press to attach new drive shaft bearing to drive shaft ②.

Bearing Installation Tool ③ :
P/N. 3AC-99900-0

⚠ CAUTION

- **Do not press drive shaft thread ⓐ directly.**
- **Do not reuse bearing. Be sure to replace with new one.**

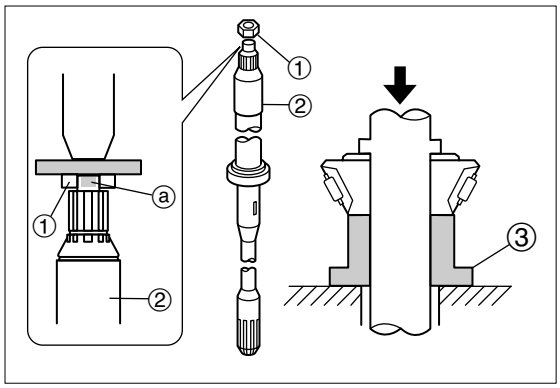

27) Disassembly of Gear Case

1. Remove taper roller bearing (outer race) ①.

Attach puller claw in the direction as shown.

Slide Hammer Kit ② :
P/N. 3AC-99080-0
Bevel Gear Bearing Puller Ass'y :
P/N. 3A3-72755-0

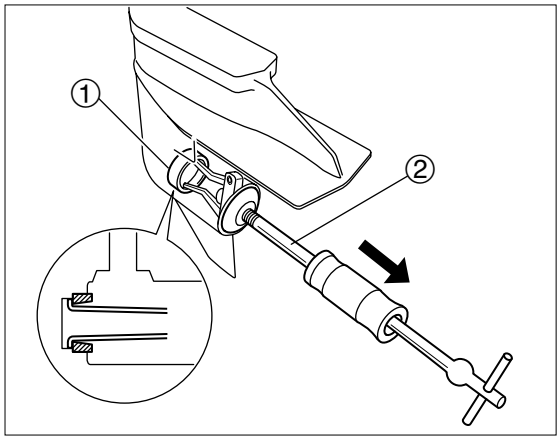

2. Remove spring guide ③.

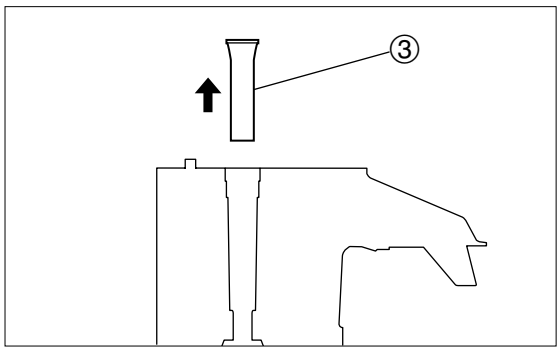

3. Remove needle bearing ④.

⚠ CAUTION

Do not reuse removed bearing.

Before removing, check bearing for play or deflection. Replace if necessary.

Needle Bearing Attachment 2 ⑤ :
P/N. 3AD-99710-0
Driver Rod 2 ⑥ :
P/N. 3AD-99702-0

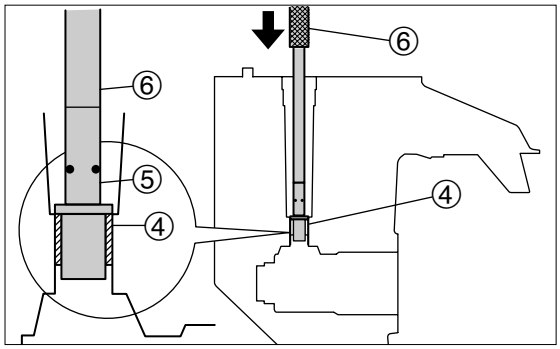

28) Inspection of Gear Case

1. Check skeg area ⓐ and torpedo-like area ⓑ for crack and damage. Replace if necessary.

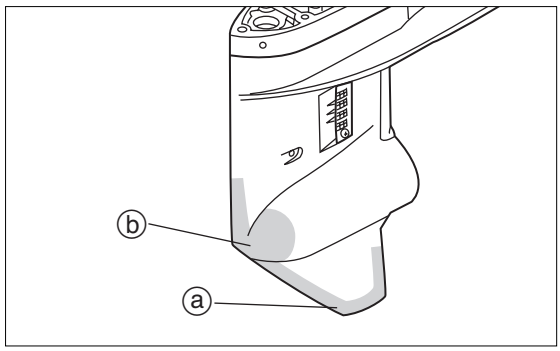

29) Assembly of Lower Unit

Perform shim adjustment when taper roller bearing, gear, drive shaft, propeller shaft or gear case is replaced.

1. Install cam rod ass'y ① as shown.

Cam Rod Bushing Bolt :
6 N·m (4 lb·ft) [0.6 kgf·m]

2. Install new needle bearing into gear case to specified depth.

Install needle bearing that is attached to O-ring side of needle bearing attachment with manufacturer's marking ⓐ facing upward.

Driver Rod 2 ② :
P/N. 3AD-99702-0
Needle Bearing Attachment 2 ③ :
P/N. 3AD-99710-0
Center Plate 2 ④ :
P/N. 3AD-99701-0

Installation Depth ⓑ :
161.5 ± 0.25 mm (6.358 ± 0.010 in)

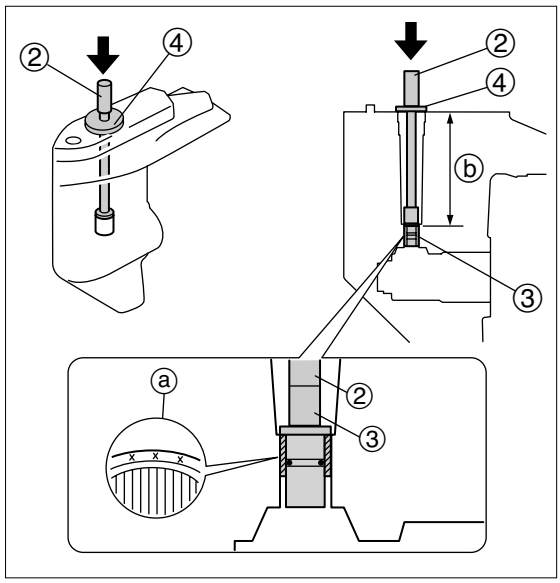

3. Install spring guide ⑤.

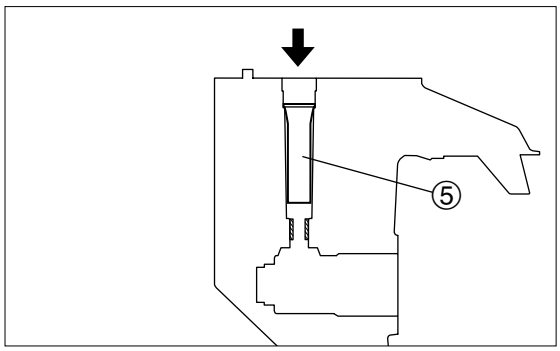

4. Install new taper roller bearing (outer race) ⑥.

Perform shim adjustment when taper roller bearing, gear, drive shaft, propeller shaft or gear case is replaced.

Bearing Outer Press Kit :
P/N. 3B7-72739-0

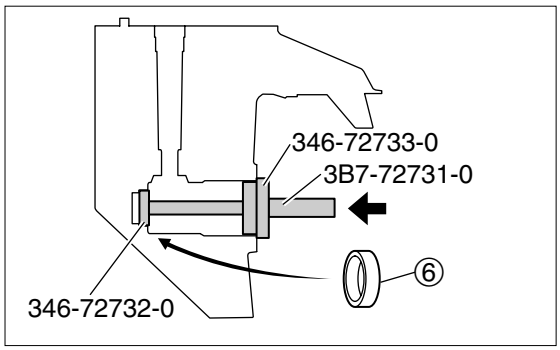

30) Installation of Pinion Gear (B Gear)

1. After installing forward gear (A gear), install drive shaft ass'y ①, pinion gear (B gear) ② and pinion nut (B gear nut), and tighten the nut to specified torque.

Bevel Gear B Nut Socket ③ :
P/N. 346-72232-0
Bevel Gear B Nut Wrench ④ :
P/N. 346-72231-0

Pinion Nut (B Gear Nut) :
35 N·m (25 lb·ft) [3.5 kgf·m]

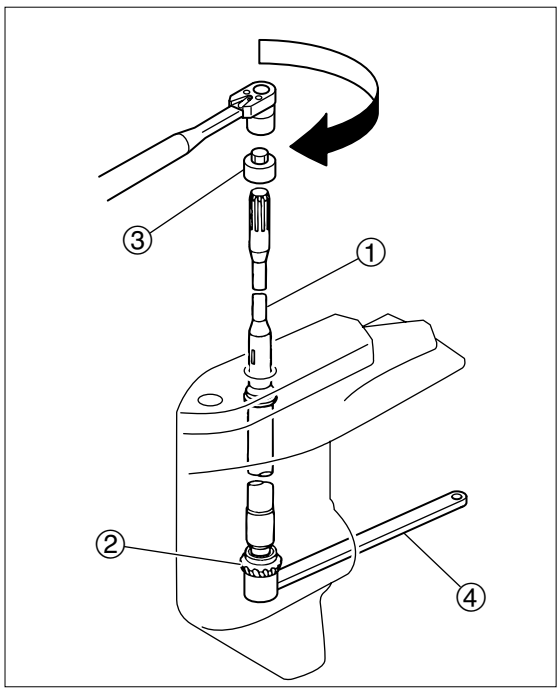

31) Settling Pinion Gear (B Gear) Height

Perform backlash measurement and shim adjustment after "Settling Pinion Gear (B Gear) Height".

⚠ CAUTION

Read description of all steps before attempting shim thickness change.

Perform shim adjustment when taper roller bearing, gear, drive shaft, propeller shaft or gear case is replaced.

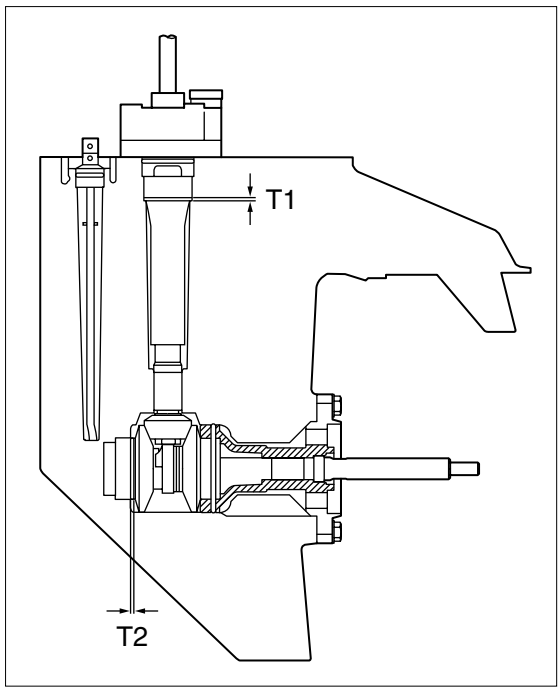

1. Measure forward gear (A gear) bushing inner diameter ⓐ. If any wear is found, perform measurement of pinion gear (B gear) height carefully. If worn severely, replace gear with new one.

Forward Gear (A Gear) Bushing Inner Diameter ⓐ : Standard Value
17.03 to 17.05 mm (0.6705 to 0.6713 in)

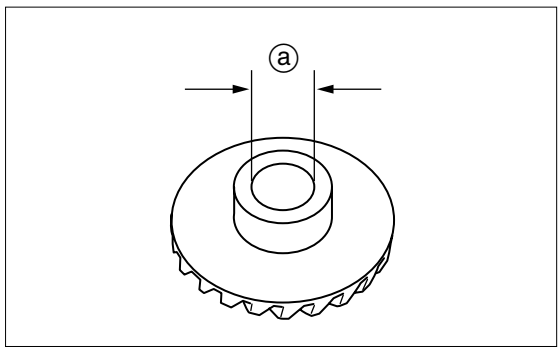

2. Clean gear case interior.

3. After installing forward gear (A gear) , install drive shaft ass'y ①, pinion gear (B gear) and pinion nut (B gear nut) ②, and tighten the nut to specified torque.

Pinion Nut (B Gear Nut) :
35 N·m (25 lb·ft) [3.5 kgf·m]

Bevel Gear B Nut Socket ③ :
P/N. 346-72232-0
Bevel Gear B Nut Wrench ④ :
P/N. 346-72231-0

4. Stand gear case vertically. (Make drive shaft vertical.)

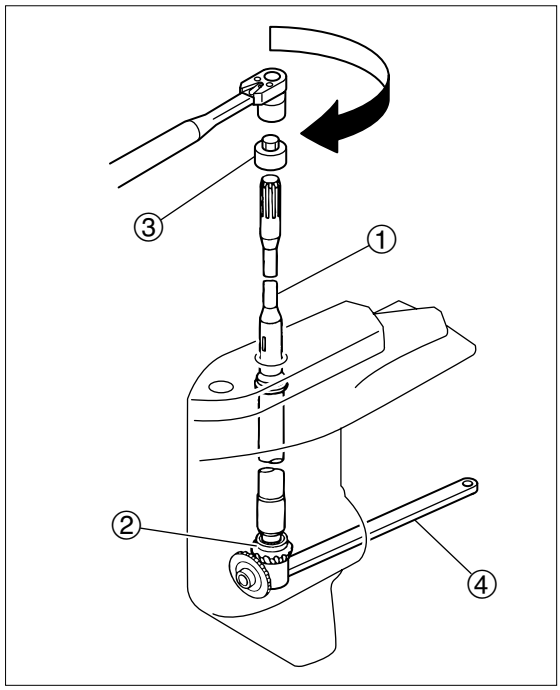

6

5. Install pump case (lower) and gasket to guide plate. (Secure guide plate with small bolts ⑤.)

Use four short bolts ⑤. M6 P1.0 L=30 mm

Short Bolts for Inspection ⑤ :
6 N·m (4 lb·ft) [6 kgf·m]

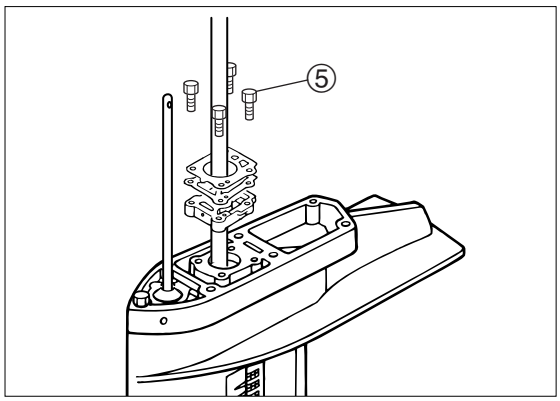

6. Put shimming gauge 2 ⑥ into gear case, and lay down gear case by 90 degrees as shown.

Shimming Gauge 2 ⑥ :
P/N. 3AC-99250-0
Driver Rod 2 ⑦ :
P/N. 3AD-99702-0

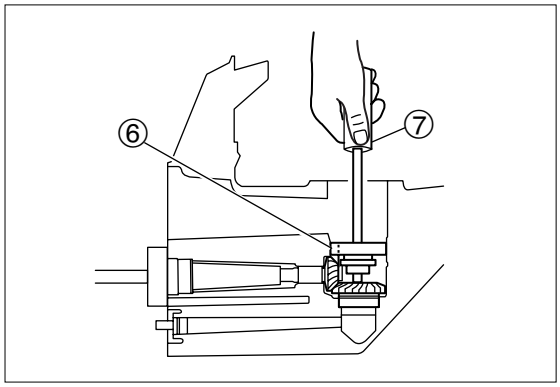

7. Position cut ⓐ as shown.

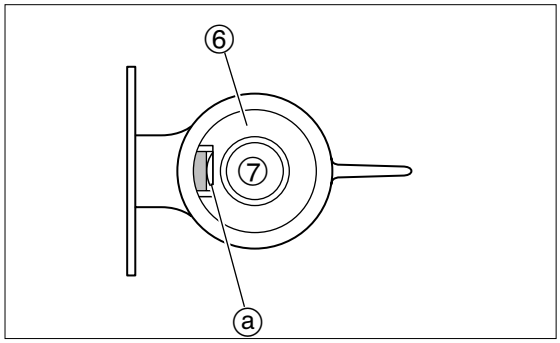

8. Insert thickness gauge ⑧ into cut ⓐ of shimming gauge 2 ⑥ to measure pinion gear (B gear) height, while pulling up the drive shaft in the direction shown by arrow.

Thickness Gauge ⑧ :
P/N. 353-72251-0

Pinion Gear (B Gear) Height Clearance :
0.60 to 0.64 mm (0.0236 to 0.0252 in)

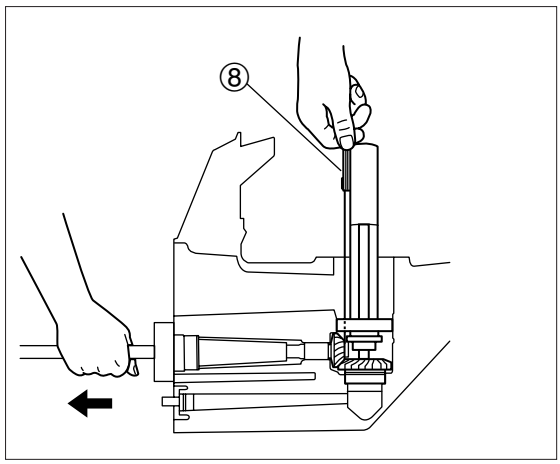

9. When clearance is within specified range, go to next section "Settling Forward Gear (A Gear) Backlash".

10. If clearance is out of specified range, add or remove shim(s) to or from taper roller bearing outer race to raise or lower pinion gear (B gear) and repeat above steps 2 to 10.

After settling pinion gear (B gear) height and forward gear (A gear) backlash, apply "Three Bond 1373B" to pinion (B gear) nut thread and tighten the nut to specified torque.

Pinion Nut (B Gear Nut) :
35 N·m (25 lb·ft) [3.5 kgf·m]

6

32) Settling Forward Gear (A Gear) Backlash

Backlash Measuring Tool Kit :
P/N. 3C8-72234-0
Shaft ① :
P/N. 345-72723-0
O-Ring ② :
P/N. 332-60002-0
Collar ③ :
P/N. 346-72245-0
Plate ④ :
P/N. 3A3-72713-0
Conical Disc Spring ⑤ :
P/N. 3B7-72734-0
Clamp A ⑥ :
P/N. 3B7-72720-0
Clamp B ⑦ :
P/N. 3B7-72720-0

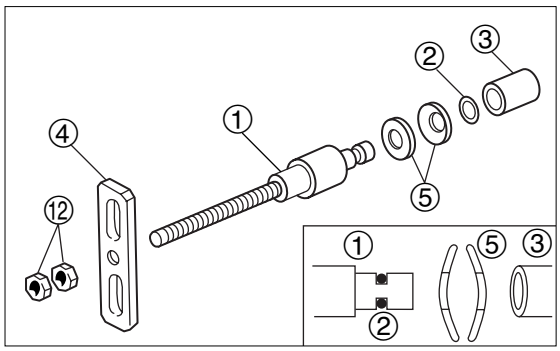

⑧ Pump Case (Lower)
⑨ Pinion Gear (B Gear)

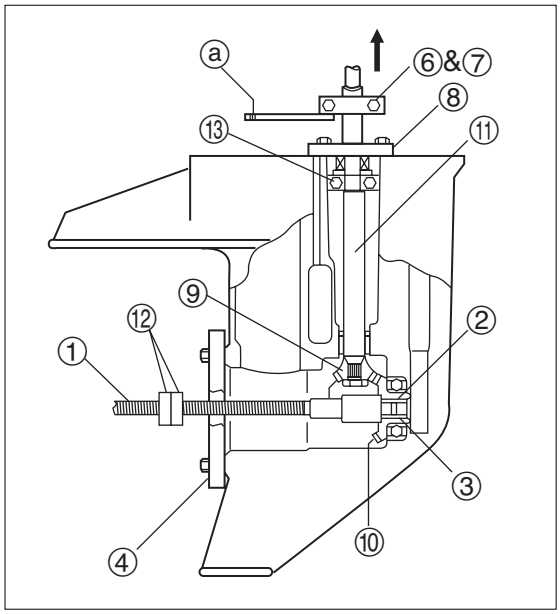

1. Perform measurement of backlash between forward gear (A gear) and pinion gear (B gear) with propeller shaft housing, propeller shaft and reverse gear (C gear) removed from gear case.
   Put conical disk springs ⑤ on the groove side of shaft ① getting their concave sides face to face, put O-ring ② in the groove, and then, collar ③. Then, screw plate ④ onto shaft ① to midpoint. Put collar ③ side of shaft ① into bearing of forward gear (A gear) ⑩, and secure plate ④ with bolts.
   Put two nuts (M10) ⑫ on the aft-end of shaft ①, and screw the nuts onto the shaft with wrench. When drive shaft starts to rotate as the nuts are turned, screw the nuts half of a turn additionally. Keep shaft ① in this state.

2. Secure clamp halves A ⑥ and B ⑦ using bolts. Turn drive shaft ⑪ a little to the right and left while pulling up in the direction shown by arrow, use dial gauge to read indication at the cut ⓐ.

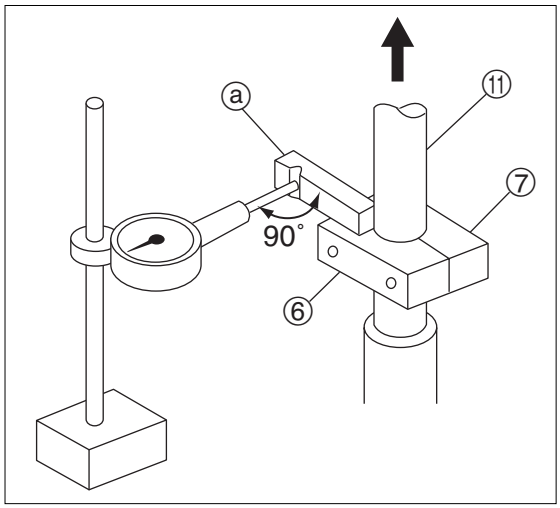

Proper Backlash Obtained from Gauge Reading :
0.33 to 0.54 mm (0.0130 to 0.0213 in)

Sizes of Adjusting Shims :
For Pinion Gear (B Gear) Side : 0.1, 0.15, 0.3, 0.5mm
For Forward Gear (A Gear) Side : 0.1, 0.15mm

- As an alternative to the above measuring tool, a tool used for pulling out the following propeller shaft housing can be used to secure forward gear (A gear).
- When performing the work, assemble propeller shaft ass'y and housing ass'y and bolts to tighten to specified torque.

Propeller Shaft Housing Bolt :
13 N·m (9 lb·ft) [1.3 kgf·m]

Puller Claw ① :
P/N. 3AC-99736-0
Puller Plate ② :
P/N. 3AC-99737-0
Center Bolt ③ :
P/N. 3AC-99738-0

Tightening Torque for Inspection :
Tighten bolt gradually until propeller shaft stops to turn.

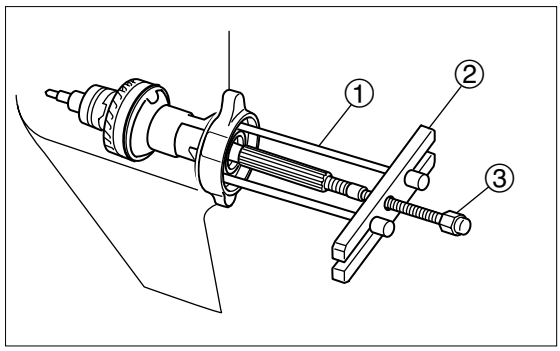

3. Perform shim adjustment as necessary based on the gauge value obtained. The table shows relation between dial gauge readings and shim adjustments.

1. Values in this table indicate dial gauge readings that are obtained when using special tool.
2. Add or remove shim(s) to adjust the thickness. "+" means to add shim(s) and "–" means to remove shim(s).
3. Check backlash measurements again.

※ Case example : Proper backlash ranges from 0.33 to 0.54mm of gauge reading, which means that no shim adjustment is required when backlash in within this range.
For example, if the gauge reads 0.85mm, shim of 0.15mm is to be added.

Gauge Reading mm	Shim Adjustment mm
0.00 to 0.05	– 0.15
0.06 to 0.20	– 0.10
0.21 to 0.32	– 0.05
※ 0.33 to 0.54	0.00
0.55 to 0.65	+ 0.05
0.66 to 0.80	+ 0.10
※ 0.81 to 0.95	+ 0.15
0.96 to 1.11	+ 0.20
1.12 to 1.30	+ 0.25
1.31 to 1.45	+ 0.30
1.46 to 1.60	+ 0.35
1.61 to 1.75	+ 0.40
1.76 to 1.90	+ 0.45
1.91 to 2.05	+ 0.50
2.06 to 2.25	+ 0.55

Keep the following matters in mind when performing the measurement.

- Shaft ① that secures forward gear (A gear) has been tightened so that drive shaft ⑪ cannot be turned over backlash when it is turned lightly.
- Fixing of drive shaft bearing ⑬ is performed only with pump case (lower) ⑧. Clamp halves A ⑥ and B ⑦ should be attached as close to pump case (lower) ⑧ as possible.
- When performing the measurement by using dial gauge, gear case and dial gauge are fixed and drive shaft ⑪ is turned while it is pulled up. During the measurement, be sure that other parts do not produce play (play of drive shaft ⑪ itself and the one between drive shaft ⑪ and bearing).

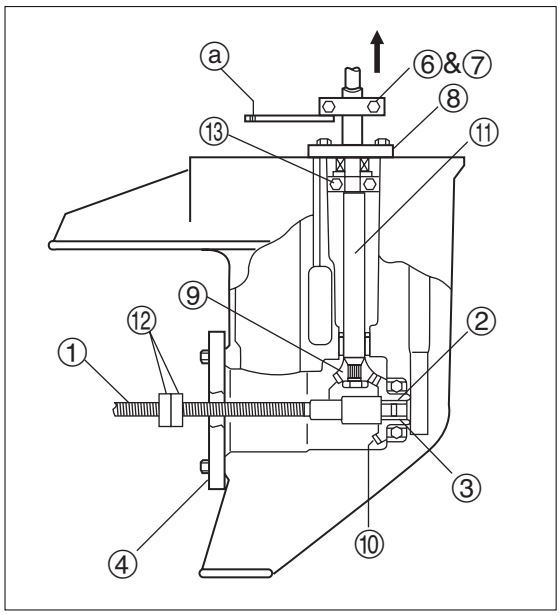

33) Reassembly of Pinion Gear Nut (B Gear Nut)

1. After installing drive shaft ass'y ①, pinion gear (B gear) ② and pinion nut (B gear nut), and tighten the nut to specified torque.

Bevel Gear B Nut Socket ③ :
P/N. 346-72232-0
Bevel Gear B Nut Wrench ④ :
P/N. 346-72231-0

Pinion Nut (B Gear Nut) :
35 N·m (25 lb·ft) [3.5 kgf·m]

After settling pinion gear (B gear) height and forward gear (A gear) backlash, apply "Three Bond 1373B" to pinion (B gear) nut thread and tighten the nut to specified torque.

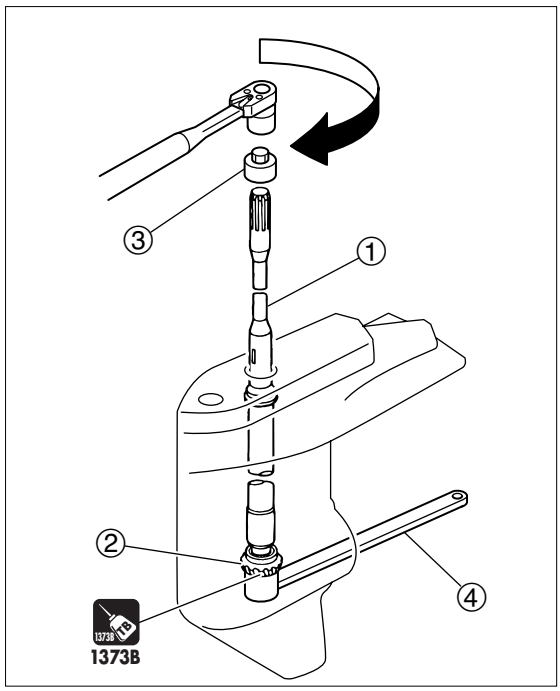

34) Assembly of Propeller Shaft Housing

1. Check that OBM grease is applied to housing ass'y oil seal.
2. Attach washer ① and propeller shaft ass'y ② to propeller shaft housing ass'y ③.
3. Apply grease to new O-ring ④.
4. Apply grease to push rod ⑤ and ball ⑥, and install them to propeller shaft ②.

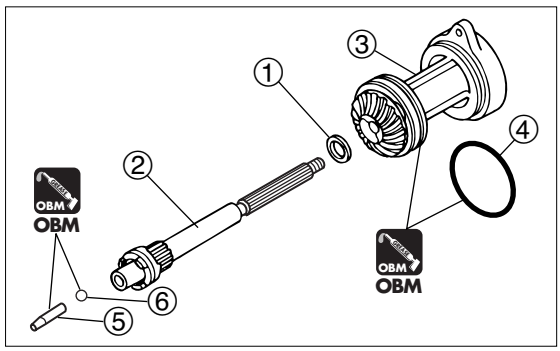

5. Attach propeller shaft housing ass'y ③ to gear case, and tighten bolts ⑦ to specified torque.

Propeller Shaft Housing Bolt ⑦ :
13 N·m (9 lb·ft) [1.3 kgf·m]

- Use grease to prevent ball from falling from push rod.
- When installing housing ass'y to gear case, tighten upper and lower bolts in 2 or 3 steps evenly to specified torque.

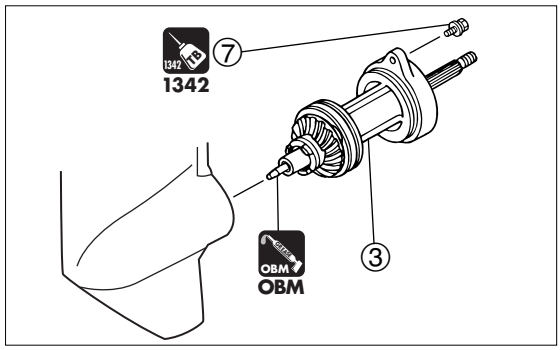

6

35) Reassembly of Pump Case (Lower)

1. Remove pump case (lower) and apply OBM grease to oil seal.

2. Attach new O-ring ① and pump case (lower) ②.

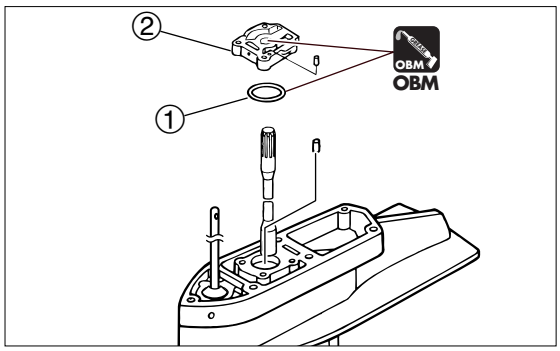

36) Assembly of Water Pump

1. Attach new gaskets ① and ②, water pump guide plate ③ and dowel pin ④.

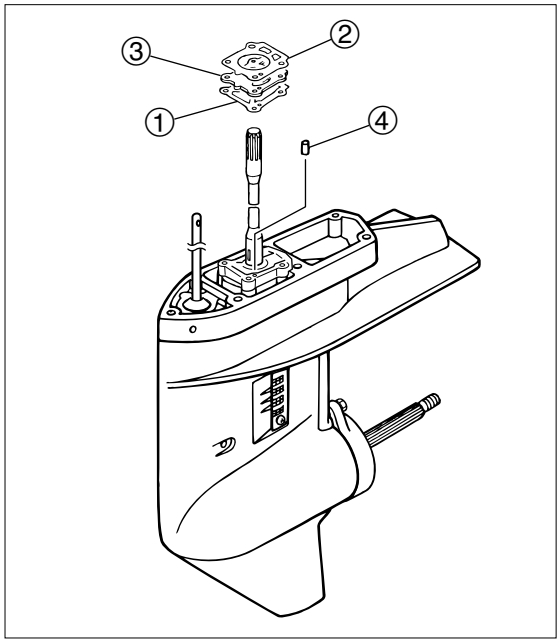

2. Use plastic hammer to install key ⑤ to drive shaft.

3. Bring impeller ⑥ groove to key ⑤ and install impeller to drive shaft.

> When reusing impeller, install it so that it rotates in original direction.

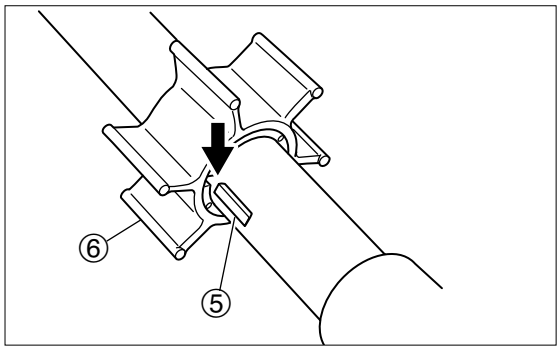

4. Put pump case liner ⑦ in the pump case (upper) ⑧, and apply grease to interior of pump case liner ⑦.

> Bring pump case liner projection ⓐ pump case (upper) groove ⓑ.

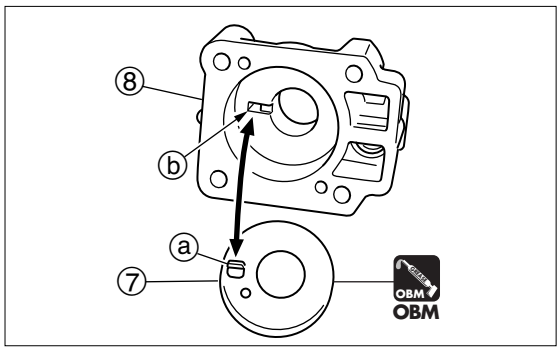

5. Install pump case (upper) ass'y ⑨ on the gear case, and tighten bolts ⑩ in two or three steps to specified torque.

Apply grease in the interior of pump case liner, and install pump case (upper) by pushing it down with hand while turning drive shaft clockwise.

Pump Case (Upper) Bolt ⑩ :
6 N·m (4 lb·ft) [0.6 kgf·m]

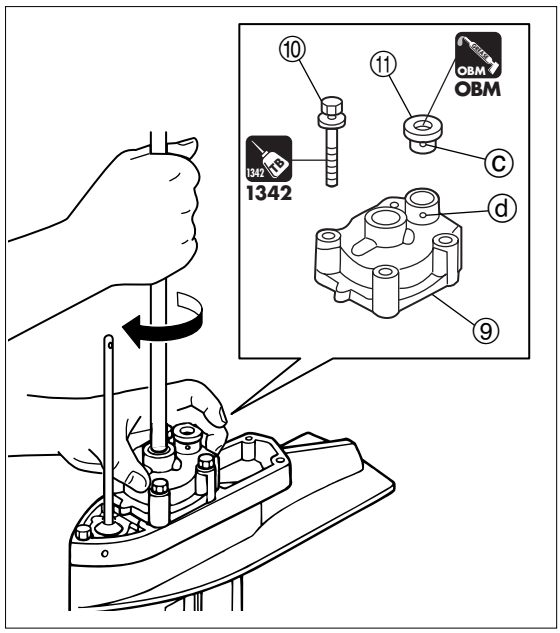

6. Feed gear oil to specified quantity. "Refer to Chapter 3."

Perform "Inspection of Gear Case (Air Leakage)" in Chapter 3 if necessary.

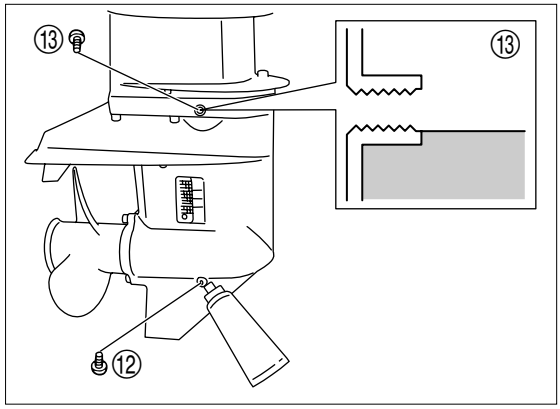

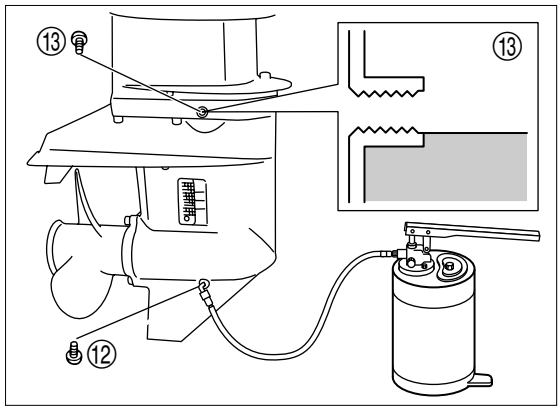

6

37) Installation of Lower Unit

1. Set cam rod to reverse (R) position.

Connect water pipe securely. Move flywheel a little or shift gear into reverse (R), install propeller, and turn propeller shaft counterclockwise to engage spline.

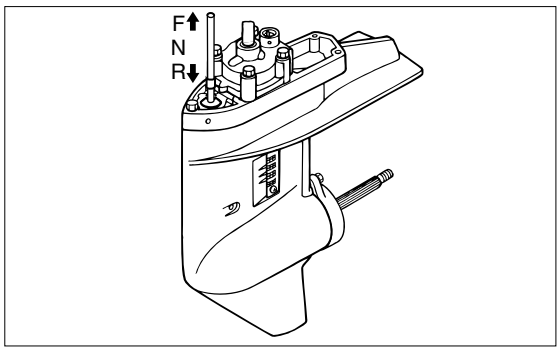

2. Attach lower unit ass'y to drive shaft housing, and tighten lower unit installation bolts ① to specified torque.

Attach front side bolt and rear left side bolt marked with B first to tighten other bolts easily.

Lower Unit Installation Bolt :
19 N·m (14 lb·ft) [19 kgf·m]

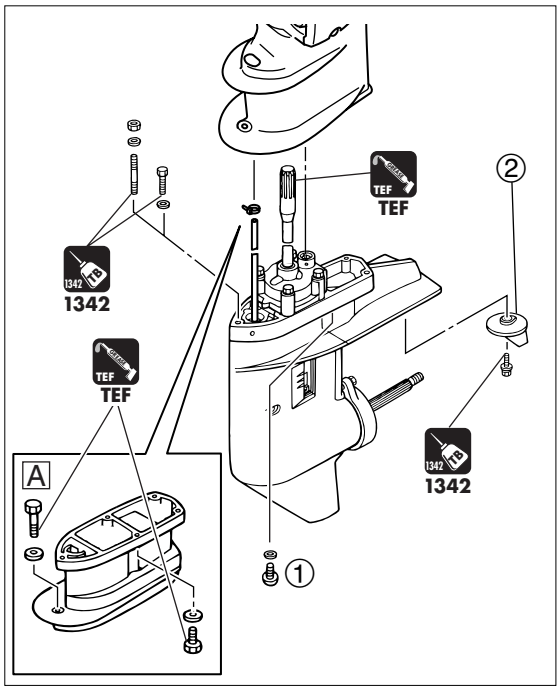

A "UL" Transom Model

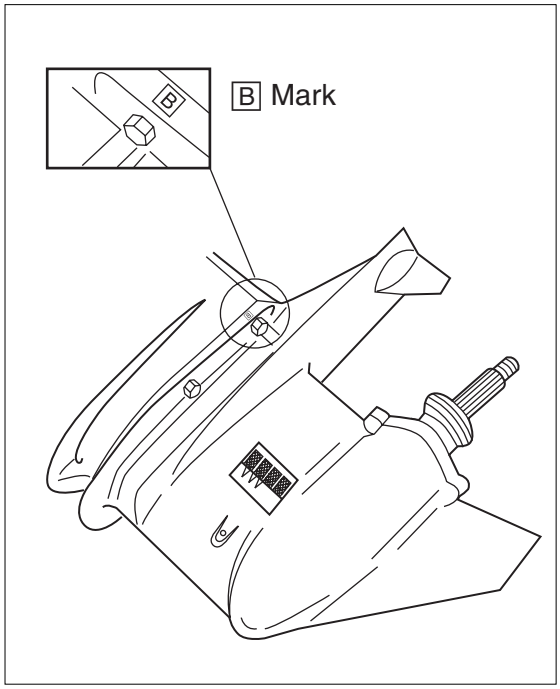

3. Set both engine side and gear case side gear shifts to neutral (N).

4. Connect shift rod and cam rod with new spring pin.

Spring Tool ③ :
P/N. 345-72228-0

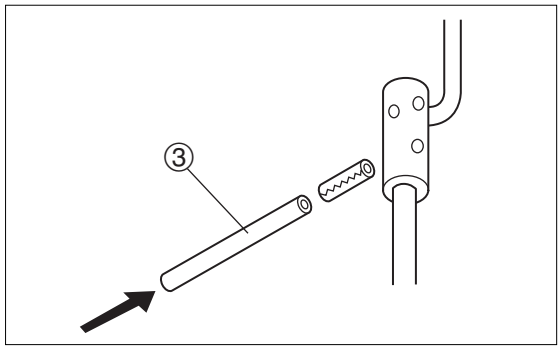

⚠ WARNING

- **Before removing or installing propeller, be sure to disconnect battery cables from battery and remove stop switch lock plate.**
- **When removing or installing propeller, do not handle propeller with bare hands.**
- **Put a piece of wooden block between anti-cavitation plate and propeller ④ to prevent rotation of propeller.**

5. Apply grease to propeller shaft.

6. Attach thrust holder, propeller, washer and propeller nut to propeller shaft. Put a piece of wooden block between anti-cavitation plate and propeller to prevent rotation of propeller, and tighten propeller nut to specified torque.

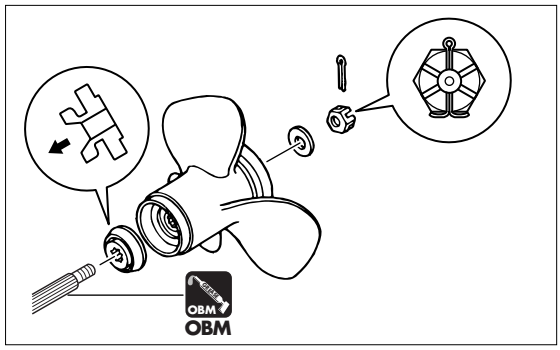

7. Turn propeller nut to tightening direction to align one of grooves to propeller shaft hole, and attach split pin.

If propeller nut groove cannot be aligned with split pin hole, loosen nut and repeat steps 6 and 7.

Propeller Nut :
25 N·m (18lb·ft) [2.5 kgf·m]

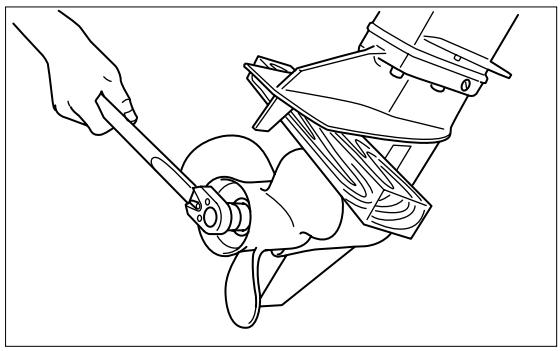

8. Check gear oil level. "Refer to Chapter 3."

Perform "Inspection of Lower Unit (Air Leakage)" in Chapter 3 if necessary.

7

Bracket

1 Special Tools ····· 7-2
2 PTT Wiring and Layout Diagram ····· 7-3
3 Parts Layout ····· 7-4
Drive Shaft Housing ····· 7-4
Swivel Bracket (Mechanical Tilt) ····· 7-5
Clamp Bracket & Reverse Lock ····· 7-6
Bracket, PTT & Gas Assistant ····· 7-7
Power Trim & Tilt ····· 7-9
Tiller Handle ····· 7-10
Bottom Cowl ····· 7-11
Shift ····· 7-12
4 Inspection Items ····· 7-14
1) Inspection of Throttle Cable ····· 7-14
2) Installation of Tiller Handle ····· 7-14
3) Adjustment of Co-pilot Plate ····· 7-15
4) Removing Drive Shaft Housing ····· 7-16
5) Pulling Out Upper Mount ····· 7-17
6) Disassembly of Drive Shaft Housing ····· 7-17
7) Inspection of Oil Strainer ····· 7-18
8) Assembly of Drive Shaft Housing ····· 7-18
9) Installation of Drive Shaft Housing Ass'y ····· 7-19
10) Removing Steering Shaft ····· 7-20
11) Installing Steering Shaft ····· 7-20
12) Removing Clamp Bracket (PTT or Gas Assistant Model) ··· 7-21
13) Removing Clamp Bracket (Mechanical Tilt Model) ··· 7-21
14) Installation of Clamp Bracket (PTT or Gas Assistant Model) ··· 7-22
15) Installation of Clamp Bracket (Mechanical Tilt Model) ··· 7-23
16) Removing PTT Unit/Gas Shock Absorber ··· 7-24
17) Removing PTT Motor ····· 7-25
18) Removing PTT Pump and Valves ····· 7-25
19) Inspection of PTT Pump and Valves ····· 7-25
20) Removing Tilt Cylinder ····· 7-26
21) Inspection of Tilt Cylinder ····· 7-26
22) Inspection of Valve ····· 7-27
23) Installation of PTT Pump and Motor ····· 7-27
24) Assembly of Tilt Cylinder ····· 7-28
25) Air-Purging PTT Unit (separated from outboard motor) ··· 7-30
26) Installation of PTT Unit/Gas Shock Absorber ··· 7-32
27) Air-Purging PTT Unit (installed on the outboard motor) ··· 7-33
28) Inspection of PTT Solenoid ····· 7-34
29) Inspection of PTT Switch ····· 7-35

1.Special Tools

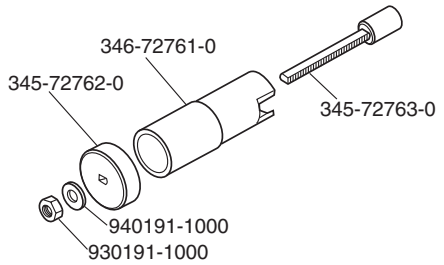

Mount Puller Kit P/N. 361-72760-0
Removing upper mount

2.PTT Wiring and Layout Diagram

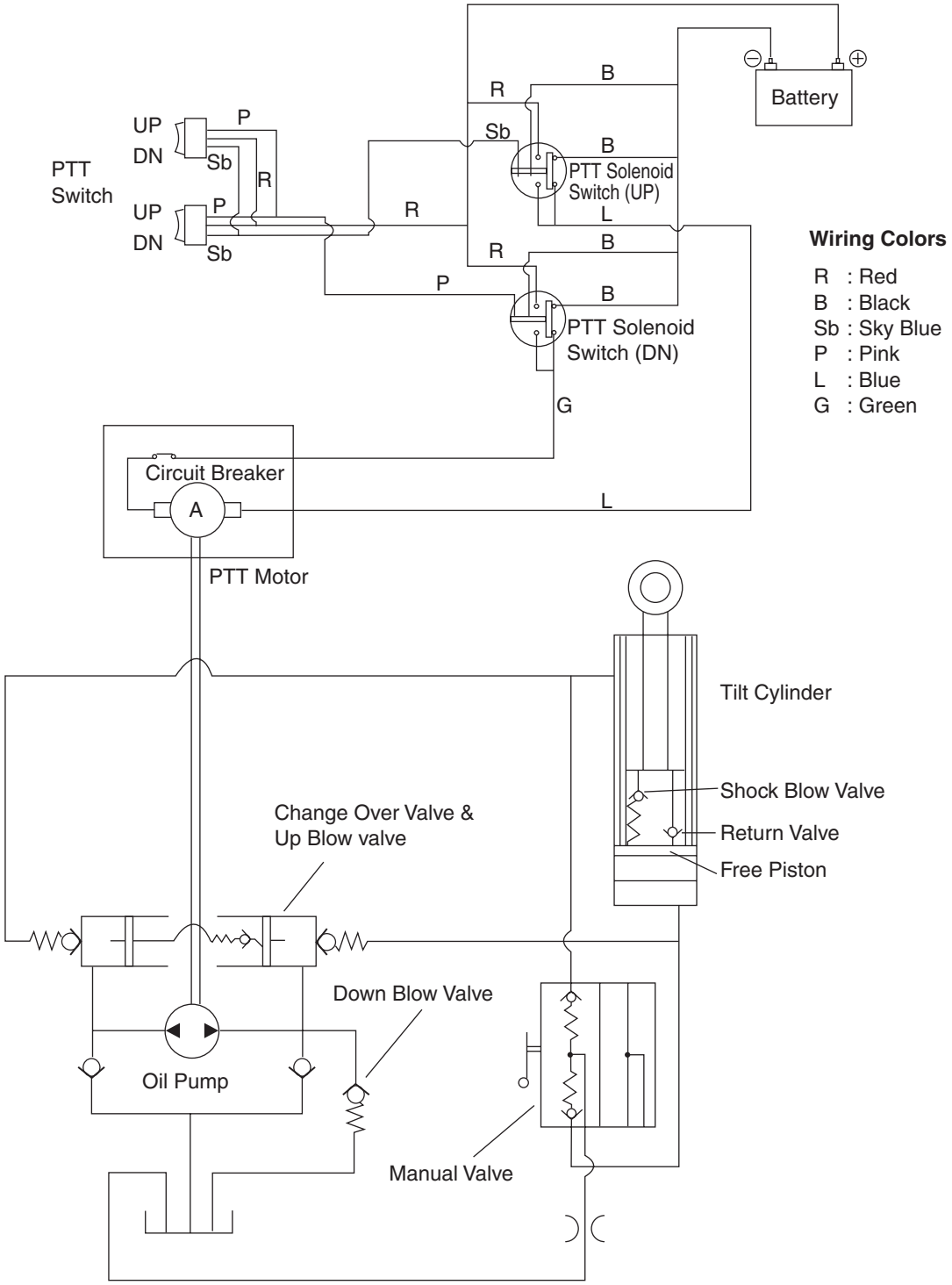

Wiring Colors

R : Red
B : Black
Sb : Sky Blue
P : Pink
L : Blue
G : Green

Mark

Oil Reservoir

Release Valve

Check Valve

Orifice

7

3.Parts Layout

P/L Fig. 13

Drive Shaft Housing

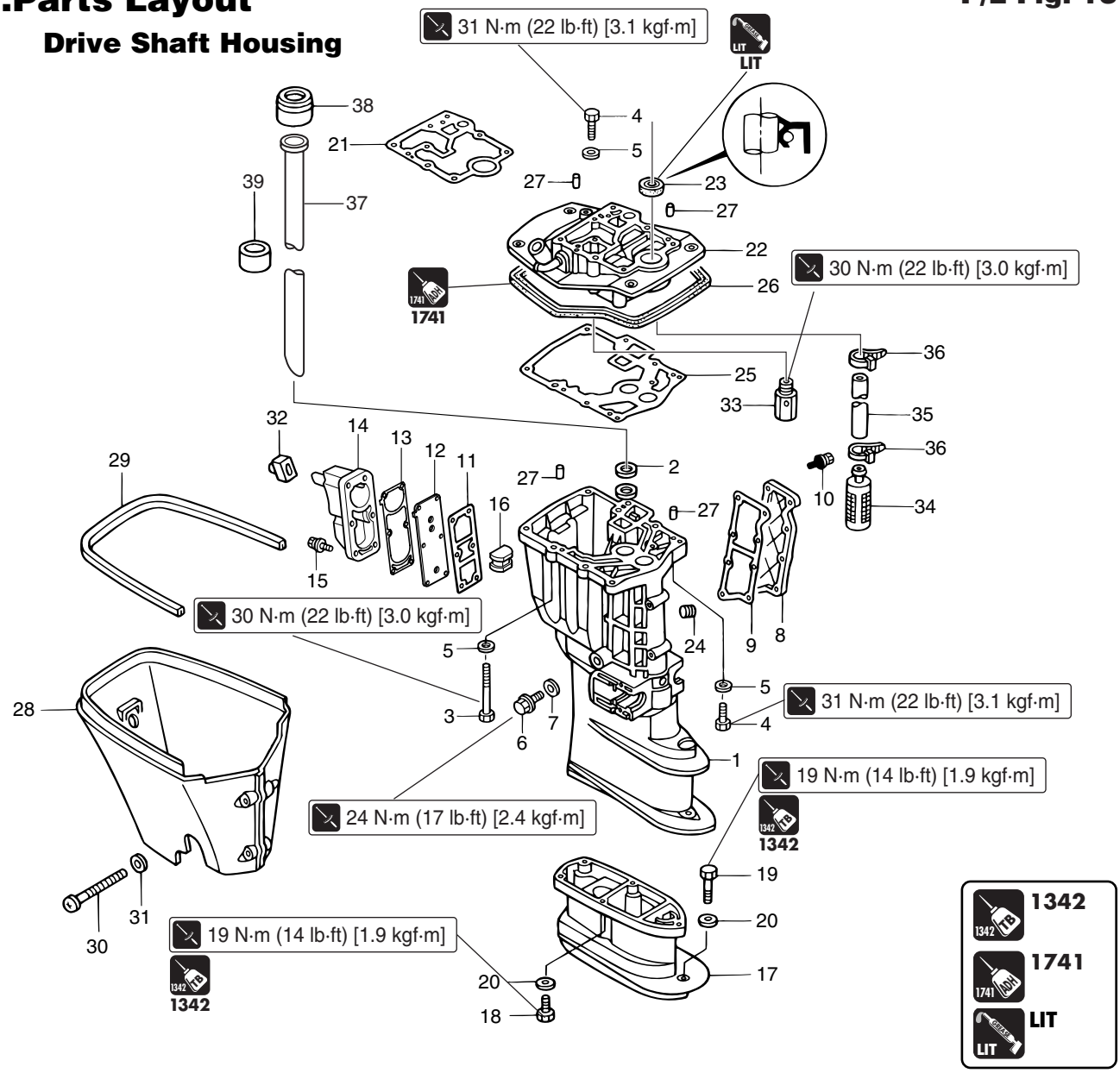

Ref. No.	Part Name	Q'ty	Remarks
1	Drive Shaft Housing "S"	1	
	Drive Shaft Housing "L"	1	
2	Water Pipe Stopper	1	
3	Bolt, 8-105	6	
4	Bolt, 8-40	3	
5	Washer	9	
6	Drain Bolt	1	
7	Washer, 14.5-24-1	1	
8	Drain Cover	1	
9	Drain Cover Gasket	1	
10	Bolt	8	M6 L=18mm
11	Idle Exhaust Port Cover Gasket	1	
12	Plate	1	
13	Idle Exhaust Port Cover Gasket	1	
14	Idle Exhaust Port Cover	1	
15	Bolt	6	M6 L=20mm
16	Grommet	1	
17	Extension Housing "UL"	1	
18	Bolt	4	M8 L=35mm
19	Bolt	1	M8 L=45mm
20	Washer, 8.1-16-1.5	5	
21	Engine Base Gasket	1	
22	Engine Base	1	with Nipple
23	Oil Seal, 16-28-6	1	Do not reuse.

Ref. No.	Part Name	Q'ty	Remarks
24	Exhaust Plug	1	
25	Drive Shaft Housing Gasket	1	
26	Engine Base Seal	1	
27	Dowel Pin, 6-12	4	
28	Apron	1	
29	Apron Seal	1	
30	Tapping Screw, 6-60	2	
31	Washer	2	
32	Apron Grommet	1	
33	Plunger	1	
34	Oil Strainer	1	
35	Hose	1	
36	Lead Wire Band, 150	2	Do not reuse.
37	Water Pipe "S"	1	
	Water Pipe "L"	1	
	Water Pipe "UL"	1	
38	Water Pipe Seal (Upper)	1	Do not reuse.
39	Rubber Hose	1	Attach to location 240mm from tip. for "L"

Swivel Bracket (Mechanical Tilt)

P/L Fig. 19

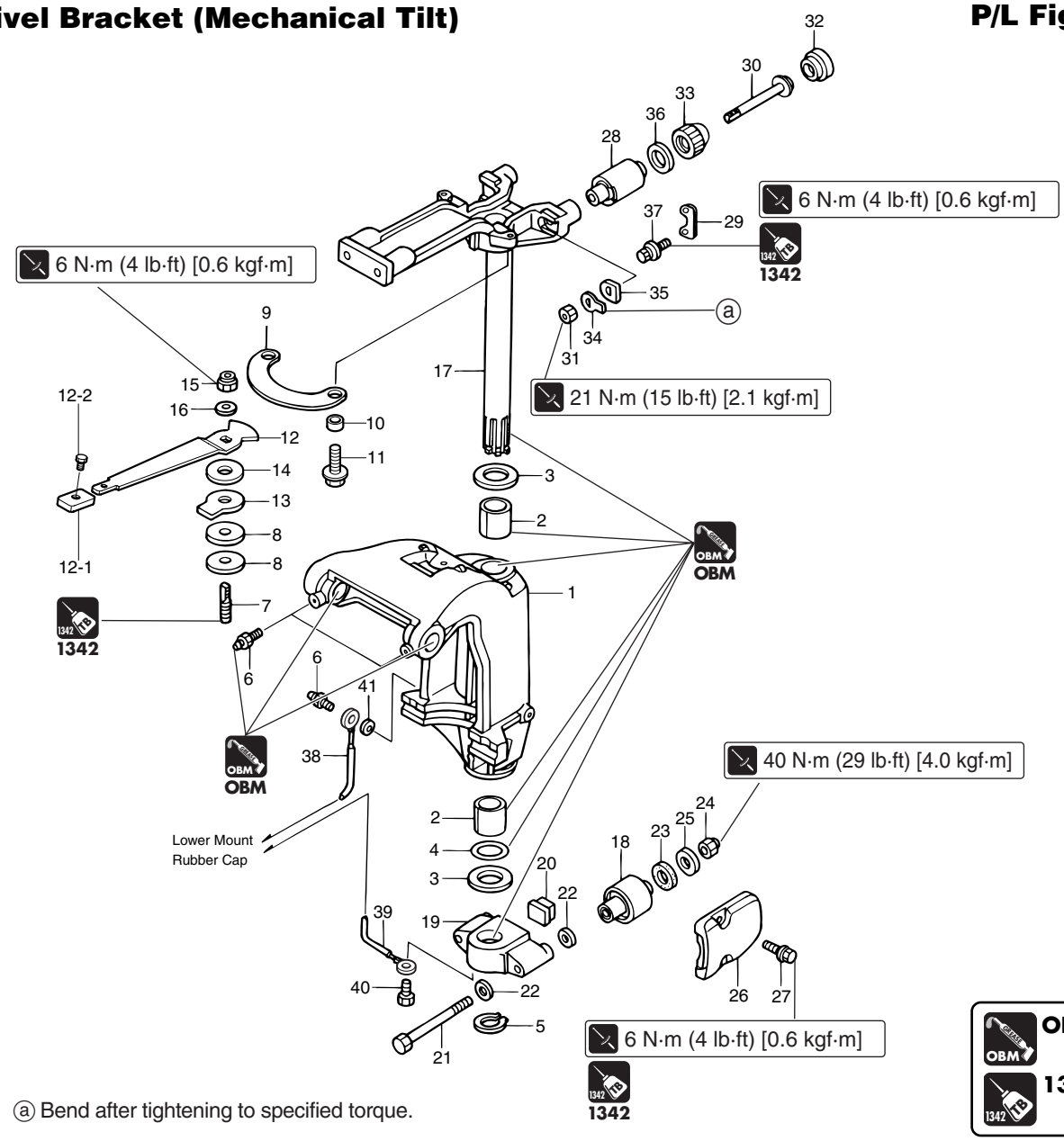

ⓐ Bend after tightening to specified torque.

Ref. No.	Part Name	Q'ty	Remarks
1	Swivel Bracket	1	
2	Bushing, 30-36-41	2	
3	Thrust Plate, 31-50-2	2	
4	O Ring, 3.5-29.7	1	Do not reuse.
5	"C" Ring, d=28	1	
6	Grease Nipple	3	
7	Co-Pilot Bolt	1	※
8	Co-Pilot Disk	2	※
9	Co-Pilot Plate	1	※
10	Collar, 6.5-10.5-6.5	2	※
11	Bolt	2	※ M6 L=16mm
12	Co-Pilot Handle	1	※
12-1	Grip	1	※
12-2	Stopper	1	※
13	Co-Pilot Washer	1	※
14	Washer, 8.1-20-0.8	1	※
15	Nylon Nut, 8P-1.25	1	※
16	Washer	1	※
17	Steering Shaft Ass'y	1	
18	Lower Mount	2	
19	Mount Bracket	1	
20	Lower Damper	1	
21	Lower Mount Bolt	2	
22	Washer	4	

Ref. No.	Part Name	Q'ty	Remarks
23	Rubber Damper, 21-36-5	2	
24	Nylon Nut, 12-P1.25	2	
25	Washer, 13-34-3	2	
26	Mount Cover	2	Rubber Mount Cap (Lower)
27	Bolt	4	M6 L=20mm
28	Upper Mount	2	
29	Mount Retainer	2	
30	Upper Mount Bolt	2	
31	Nut	2	
32	Upper Damper A	2	
33	Upper Damper B	2	
34	Lock Tab	2	
35	Lock Plate	2	
36	Washer	2	
37	Bolt	4	M6 L=20mm
38	Earth Wire	1	L=210
39	Earth Wire	1	L=110
40	Bolt	1	M6 L=12mm
41	Washer	1	

※ Tiller Handle Model

Clamp Bracket & Reverse Lock

P/L Fig. 18

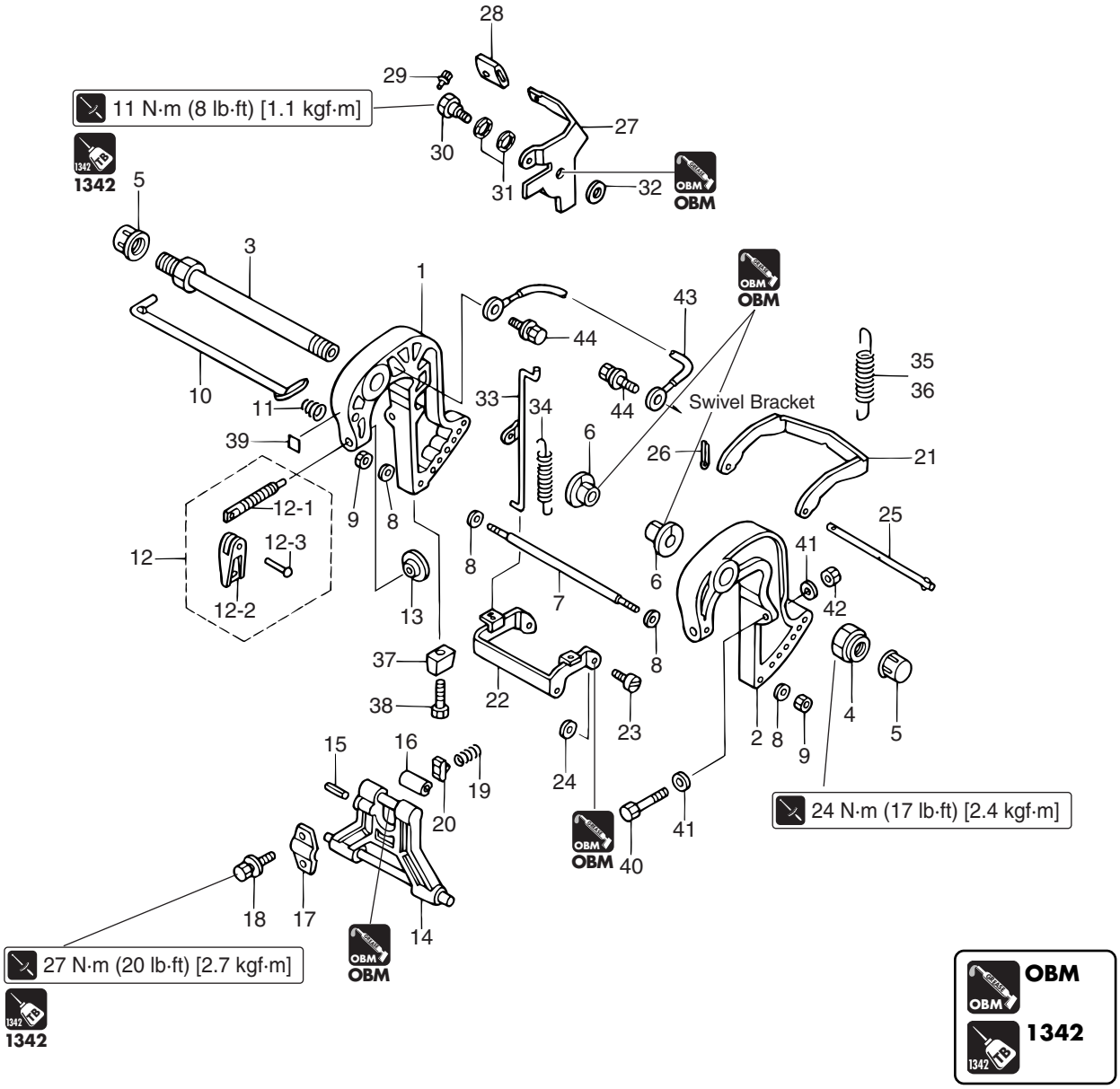

Ref. No.	Part Name	Q'ty	Remarks
1	Clamp Bracket (Right)	1	Stern Bracket (Right) Starboard Side
2	Clamp Bracket (Left)	1	Stern Bracket (Left) Port Side
3	Swivel Bracket Shaft	1	Bracket Bolt
4	Nylon Nut, 7/8	1	0.875in
5	Bracket Shaft Cap	2	
6	Bracket Shaft Bushing	2	
7	Distance Piece	1	
8	Washer	4	
9	Nut	2	
10	Thrust Rod	1	
11	Trust Rod Spring	1	
12	Clamp Screw Ass'y	2	
12-1	Clamp Screws	2	
12-2	Clamp Screw Handle	2	
12-3	Rivet, 3-22	2	
13	Clamp Screw Pad	2	
14	Tilt Stopper	1	
15	Spring Pin, 6-40	1	
16	Bushing, 10.2-12-29.5	1	
17	Tilt Stopper Set Plate	1	
18	Bolt	2	
19	Tilt Stopper Friction Spring	1	
20	Set Piece	1	
21	Reverse Lock	1	

Ref. No.	Part Name	Q'ty	Remarks
22	Reverse Lock Arm	1	
23	Reverse Lock Arm Shaft	2	
24	Washer, 6-16-1.5	2	
25	Reverse Lock Rod	1	
26	Split Pin, 2-12	1	
27	Reverse Lock Lever	1	
28	Reverse Lock Lever Grip	1	
29	Grip Stopper	1	
30	Reverse Lock Lever Shaft	1	
31	Wave Washer, d=8	2	
32	Washer, 6-16-1.5	1	
33	Reverse Lock Link	1	
34	Reverse Lock Lever Spring	1	
35	Reverse Lock Spring "S"	1	for "S"
36	Reverse Lock Spring "L"	1	for "L","UL"
37	Anode	1	
38	Bolt	1	M6 L=30mm
39	Co-Pilot Decal	1	
40	Bolt	2	M8 L=85mm
41	Washer	4	
42	Nut	2	
43	Earth Wire	1	L=130
44	Bolt	2	M6 L=12mm

Bracket, PTT & Gas Assistant

P/L Fig. 20

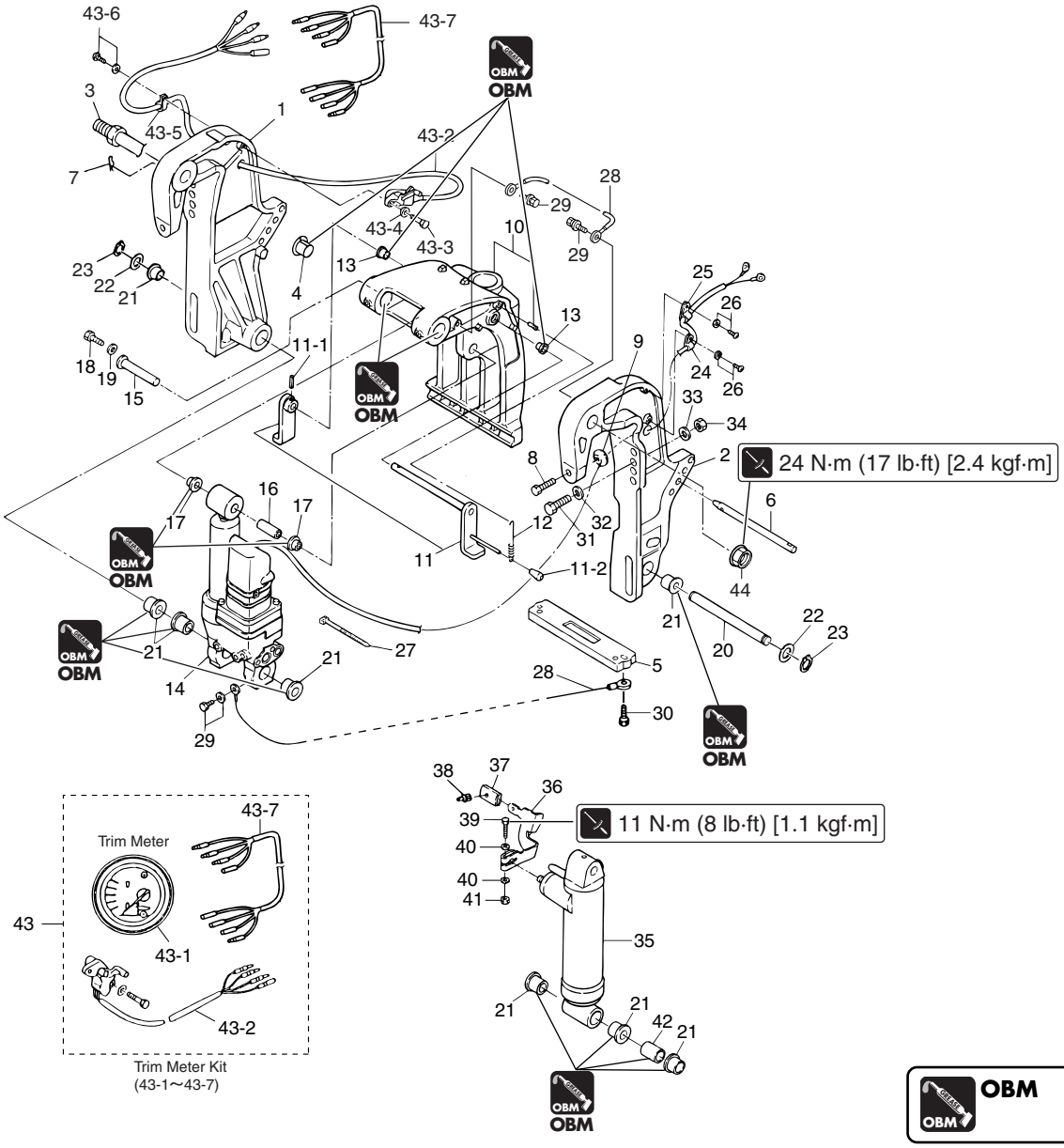

Ref. No.	Part Name	Q'ty	Remarks
1	Clamp Bracket (Right)	1	Stern Bracket (Right) "PTT" Model
	Clamp Bracket (Right)	1	※ Stern Bracket (Right)
2	Clamp Bracket (Left)	1	Stern Bracket (Left) "PTT" Model
	Clamp Bracket (Left)	1	※ Stern Bracket (Left)
3	Swivel Bracket Shaft	1	Bracket Bolt
4	Bracket Shaft Bushing	2	
5	Anode	1	
6	Thrust Rod	1	
7	Snap Pin, d=10	1	
8	Clamp Screws	2	
9	Clamp Screw Pad	2	
10	Swivel Bracket	1	with Pin
11	Tilt Stopper	1	"PTT" Model
	Tilt Stopper	1	Gas Assistant Model
11-1	Spring Pin, 3.5-16	1	
11-2	Tilt Stopper Grip	1	
12	Tilt Stopper Spring	1	
13	Collar, 10.2-12-12	2	
14	Power Trim & Tilt	1	Refer to "7-9".
15	Cylinder Pin (Upper)	1	
16	Bushing, 13-16-40	1	
17	Bushing, 13-17-19.5	2	
18	Bolt	1	M6 L=12mm
19	Washer, 6.5-23-1.5	1	

Ref. No.	Part Name	Q'ty	Remarks
20	Cylinder Pin (Lower)	1	
21	Bushing, 18-24-22	5	6 pieces on Gas Assistant Model
22	Washer, 18.2-34-1	2	
23	"C" Ring, d=28	2	
24	Clamp	1	
25	Clamp, 6-14L	1	
26	Screw	2	M6 L=12mm
27	Lead Wire Band, 300	1	
28	Earth Wire	2	L=130
29	Bolt	3	M6 L=12mm
30	Bolt	2	M6 L=30mm
31	Bolt, 12-P1.25	4	L=105
32	Washer, 13-34-3	4	
33	Washer	4	
34	Nut, P1.25	4	
35	Gas Shock Absorber	1	※
36	Lock Lever	1	※
37	Lock Lever Grip	1	※
38	Grip Stopper	1	※
39	Bolt	1	※M6 L=35mm
40	Washer	2	※
41	Nut	1	※
42	Collar, 18.2-21.7-30	1	※
43	Trim Meter Kit	1	Option

※ Gas Assistant Model

Bracket, PTT & Gas Assistant

P/L Fig. 20

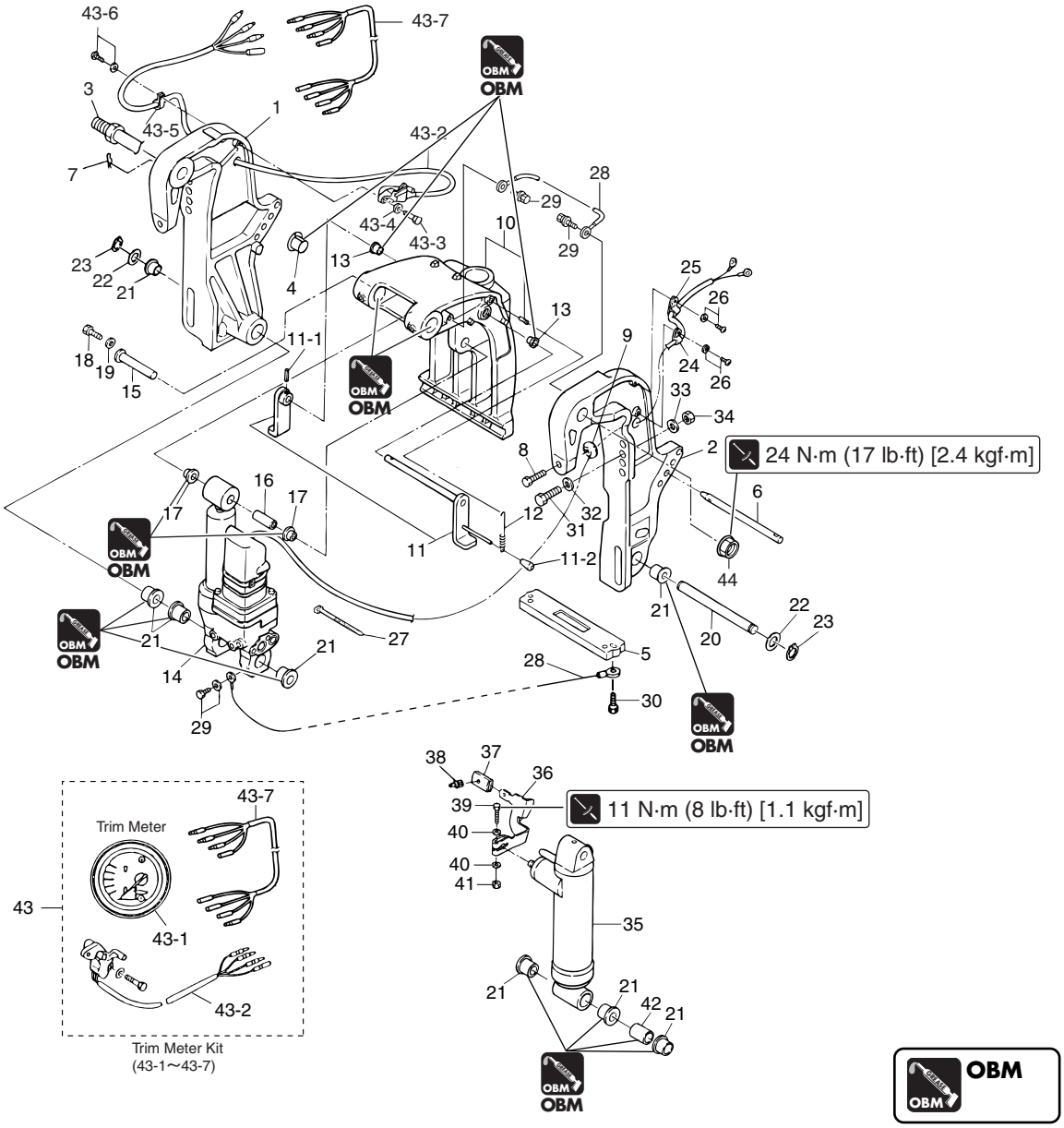

Ref. No.	Part Name	Q'ty	Remarks
43-1	Trim Meter	1	※
43-2	Trim Sensor	1	※L=1700 , Trim Sender
43-3	Bolt	2	※
43-4	Washer, 6-16-1.5	2	※
43-5	Clamp, 6-9.5L	1	※
43-6	Screw	1	※
43-7	Extension Cord (Trim Sensor)	1	※L=6000
44	Nylon Nut, 7/8	1	0.875in

※ Option

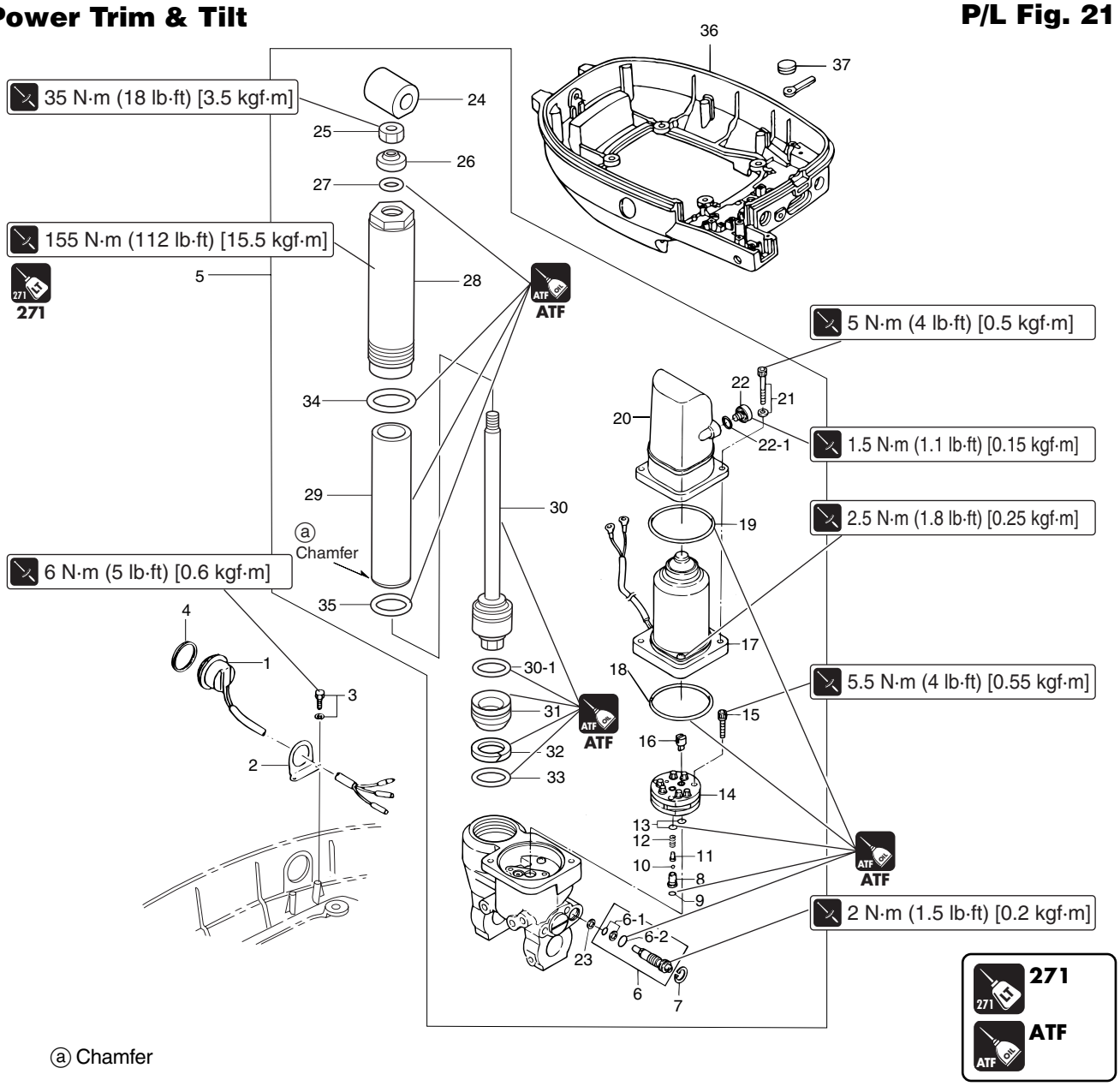

ⓐ Chamfer

Ref. No.	Part Name	Q'ty	Remarks
1	PTT Switch	1	
2	PTT Switch Bracket	1	
3	Bolt	2	M6 L=16mm
4	PTT Switch Gasket	1	
5	PTT Unit	1	
6	Manual Valve Ass'y	1	
6-1	Seal Set	1	
6-2	O Ring, 2.4-9.8	1	Do not reuse.
7	"C" Ring	1	
8	Valve Seat	1	
9	O Ring, 1.5-3.5	1	Do not reuse.
10	Ball	1	
11	Spring Seat	1	
12	Spring	1	
13	O Ring, 1.5-6.5	2	Do not reuse.
14	Pump	1	
15	Bolt	3	
16	Pump Coupling	1	
17	Motor	1	
18	O Ring, 2-62.5	1	Do not reuse.
19	O Ring, 2.4-66.6	1	Do not reuse.
20	Reservoir Tank	1	
21	Bolt	2	
22	Cap Ass'y	1	

Ref. No.	Part Name	Q'ty	Remarks
22-1	O Ring, 1.9-9.8	1	Do not reuse.
23	Seal Washer	1	
24	Joint	1	
25	Nut	1	
26	Dust Seal	1	
27	O Ring, 2.4-12.3	1	Do not reuse.
28	Cylinder	1	
29	Inner Tube	1	ø32 [Outer chamfered end downward]
30	Tilt Rod Ass'y	1	ø12.5
30-1	O Ring, 2-28.5	1	ø32 Do not reuse.
31	Free Piston	1	
32	Back-Up Ring	1	
33	O Ring, 2.4-27.7	1	Do not reuse.
34	O Ring, 2-43.5	1	Do not reuse.
35	O Ring, 2-34.5	1	Do not reuse.
36	Bottom Cowl	1	Motor Cover (Lower)
37	Grommet, 18-2.5	1	PTT Model

Tiller Handle

P/L Fig. 12

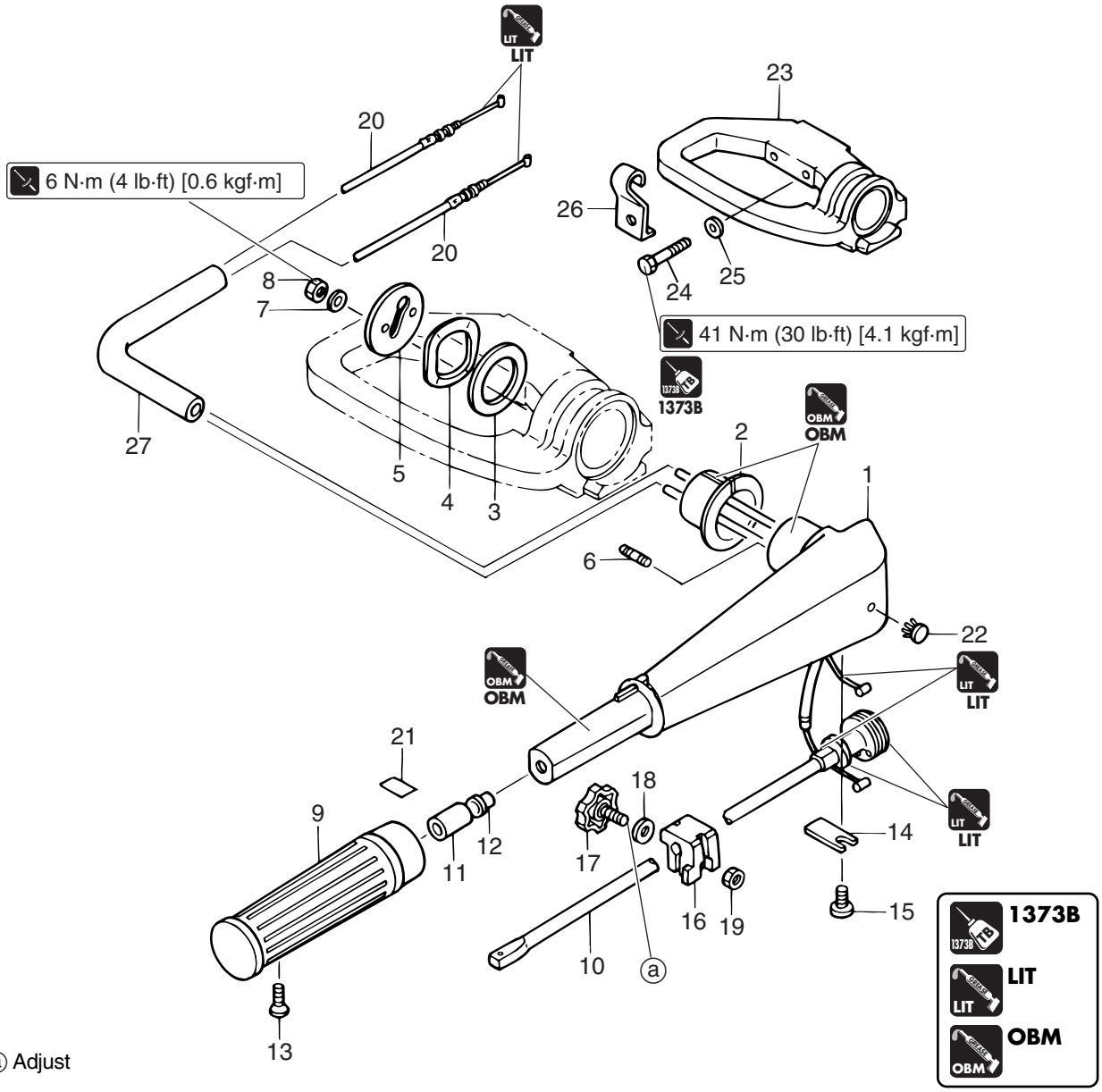

ⓐ Adjust

Ref. No.	Part Name	Q'ty	Remarks
1	Tiller Handle	1	※
2	Tiller Handle Bushing	1	※
3	Washer, 39-52-1	1	※
4	Wave Washer, 39.5-52-1.2	1	※
5	Tiller Handle Cover	1	※
6	Stud Bolt	2	※
7	Washer	2	※
8	Nut	2	※
9	Grip	1	※
10	Throttle Shaft	1	※
11	Throttle Shaft Damper	1	※
12	Bushing, 8.4-10-11	1	※
13	Screw	1	※
14	Throttle Shaft Supporter	1	※
15	Screw	1	※
16	Grip Friction Piece	1	※
17	Adjusting Screw	1	※
18	Washer	1	※
19	Nut	1	※
20	Throttle Wire	2	※
21	Throttle Decal	1	※
22	Plastic Rivet, 6.5	1	※
23	Steering Bracket	1	※
24	Bolt, 10-80 P1.5	2	M10 L=80mm

Ref. No.	Part Name	Q'ty	Remarks
25	Washer	2	
26	Throttle Wire Clamp	1	
27	Protector	1	

※ Tiller Handle Model

Bottom Cowl

P/L Fig. 22

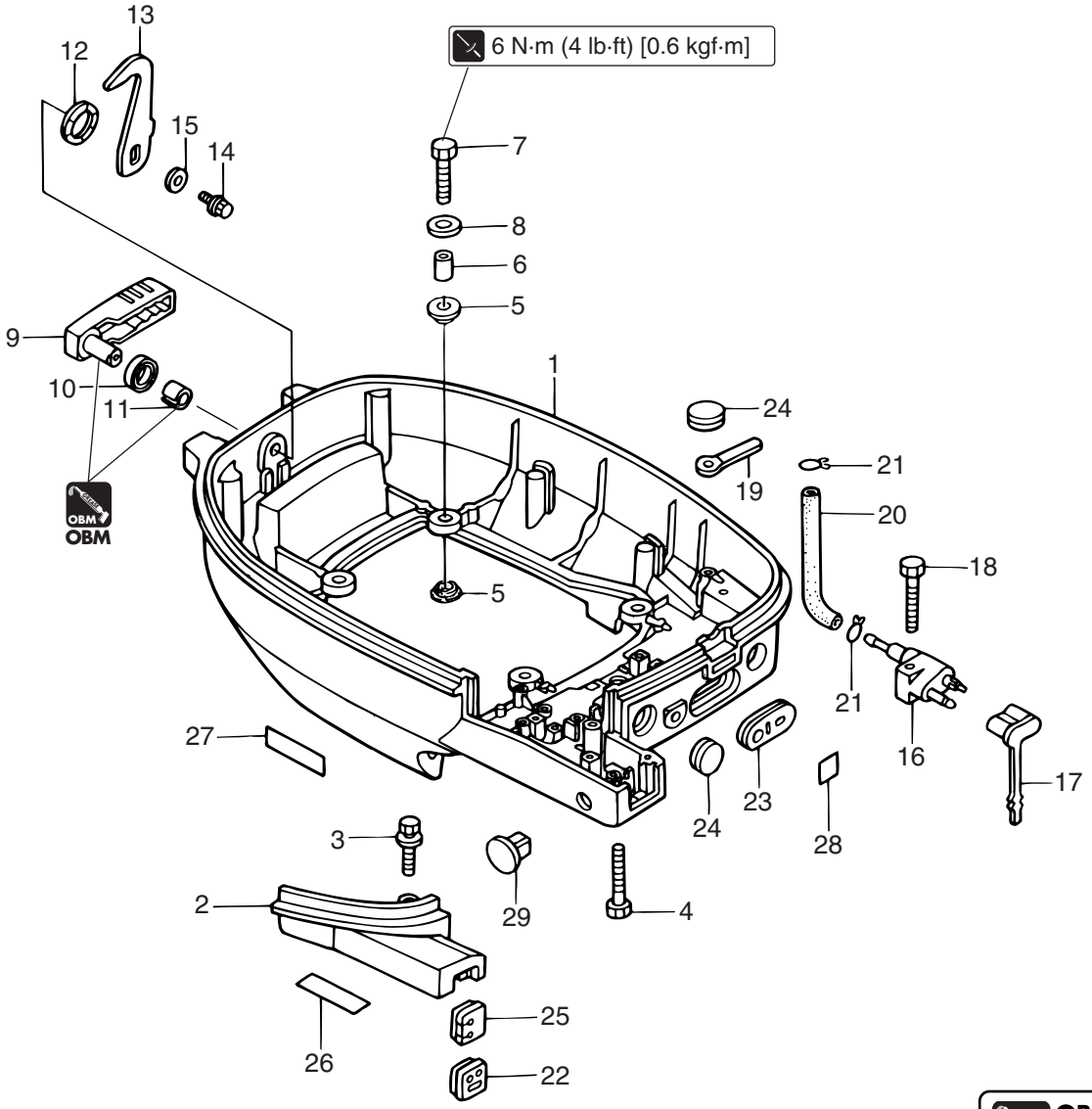

Ref. No.	Part Name	Q'ty	Remarks
1	Bottom Cowl	1	Motor Cover (Lower) "Refer to 7-8 for PTT model."
2	Cable Cover	1	
3	Bolt	1	
4	Bolt	3	
5	Rubber Mount, 8.5-14-2.5	8	
6	Spacer, 6.2-9-15.7	4	
7	Bolt	4	M6 L=36mm
8	Washer, 6.5-21-1	4	
9	Hook Lever	1	
10	Hook Lever Seal Ring	1	
11	Bushing, 14-16.5-17.7	1	
12	Wave Washer	1	
13	Cover Hook	1	
14	Bolt	1	M6 L=12mm
15	Washer, 6-16-1.5	1	
16	Fuel Connector (Engine Side, Male)	1	
17	Fuel Connector Protector	1	
18	Bolt	1	M6 L=30mm
19	Clamp, 6.5-87P	1	
20	Rubber Hose	1	
21	Clip, ø10	2	
22	Control Cable Grommet	1	▲
23	Battery Cable Grommet	1	
24	Grommet, 17-2.7	2	■

Ref. No.	Part Name	Q'ty	Remarks
25	Throttle Cable Grommet	1	※
26	Shift Decal (F, N, R)	1	※
27	Storage Decal	1	
28	Oil Pressure Decal	1	
29	Plug	1	▲

▲ PTT Remote Control Model ■ Mechanical Tilt Remote Control Model ※ Tiller Handle Model

Shift

P/L Fig. 16

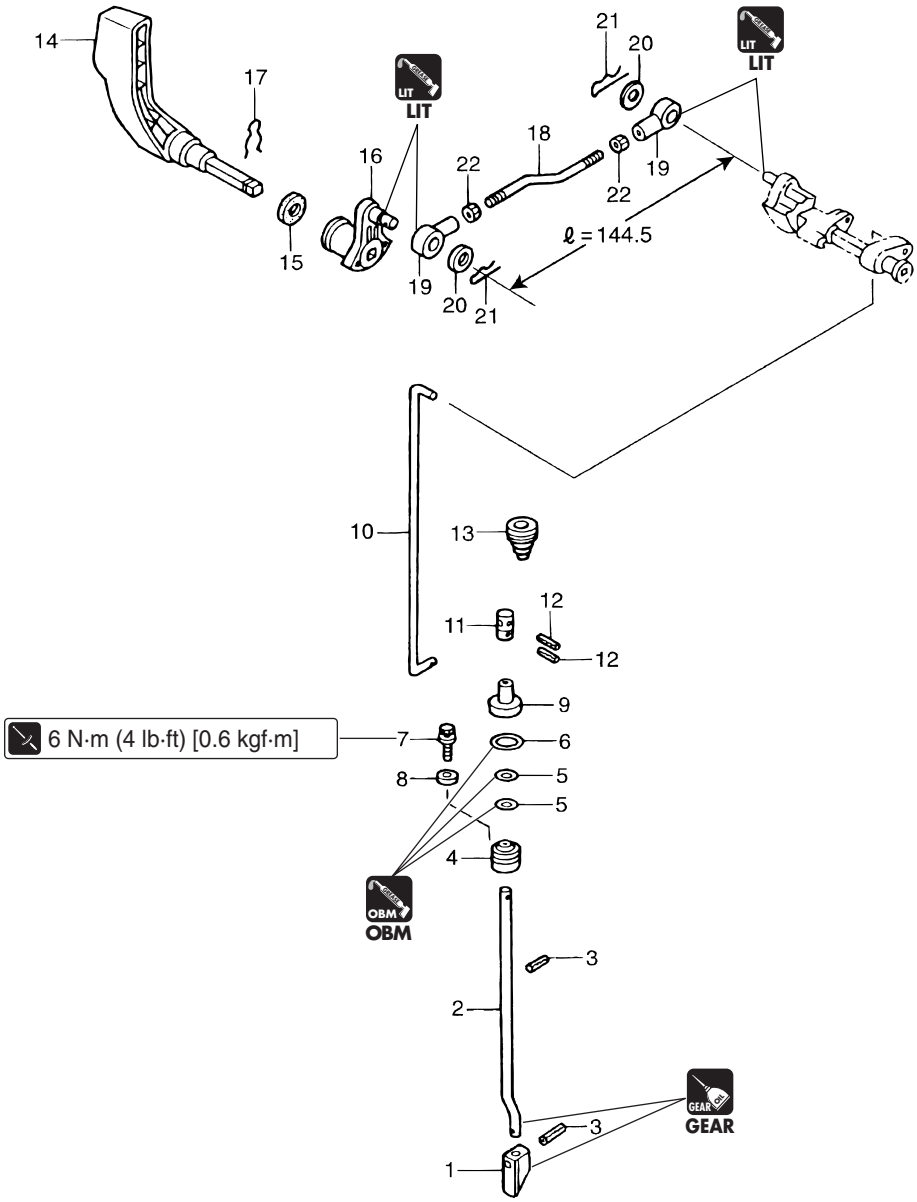

Ref. No.	Part Name	Q'ty	Remarks
1	Clutch Cam	1	
2	Cum Rod "S"	1	
	Cam Rod "L"	1	
	Cam Rod "UL"	1	
3	Spring Pin, 3-12	2	
4	Cam Rod Bushing	1	
5	O Ring, 2.4-5.8	2	Do not reuse.
6	O Ring, 3.5-21.7	1	Do not reuse.
7	Bolt	1	M6 L=12mm
8	Washer, 6-16-1.5	1	
9	Cam Rod Holder	1	for Transom "UL"
10	Shift Rod	1	
11	Shift Rod Joint	1	
12	Spring Pin, 3-12	2	Do not reuse.
13	Grommet, 17-3	1	※
14	Shift Lever	1	※
15	Seal Ring	1	※
16	Shift Arm "B"	1	※
17	Snap Retainer, d=8	1	※
18	Shift Lever Rod	1	※
19	Cable Joint	1	※
20	Washer, 8.5-18-1.6	2	※
21	Snap Pin, d=8	2	※
22	Nut	2	※

※ Tiller Handle Model

Shift

P/L Fig. 17

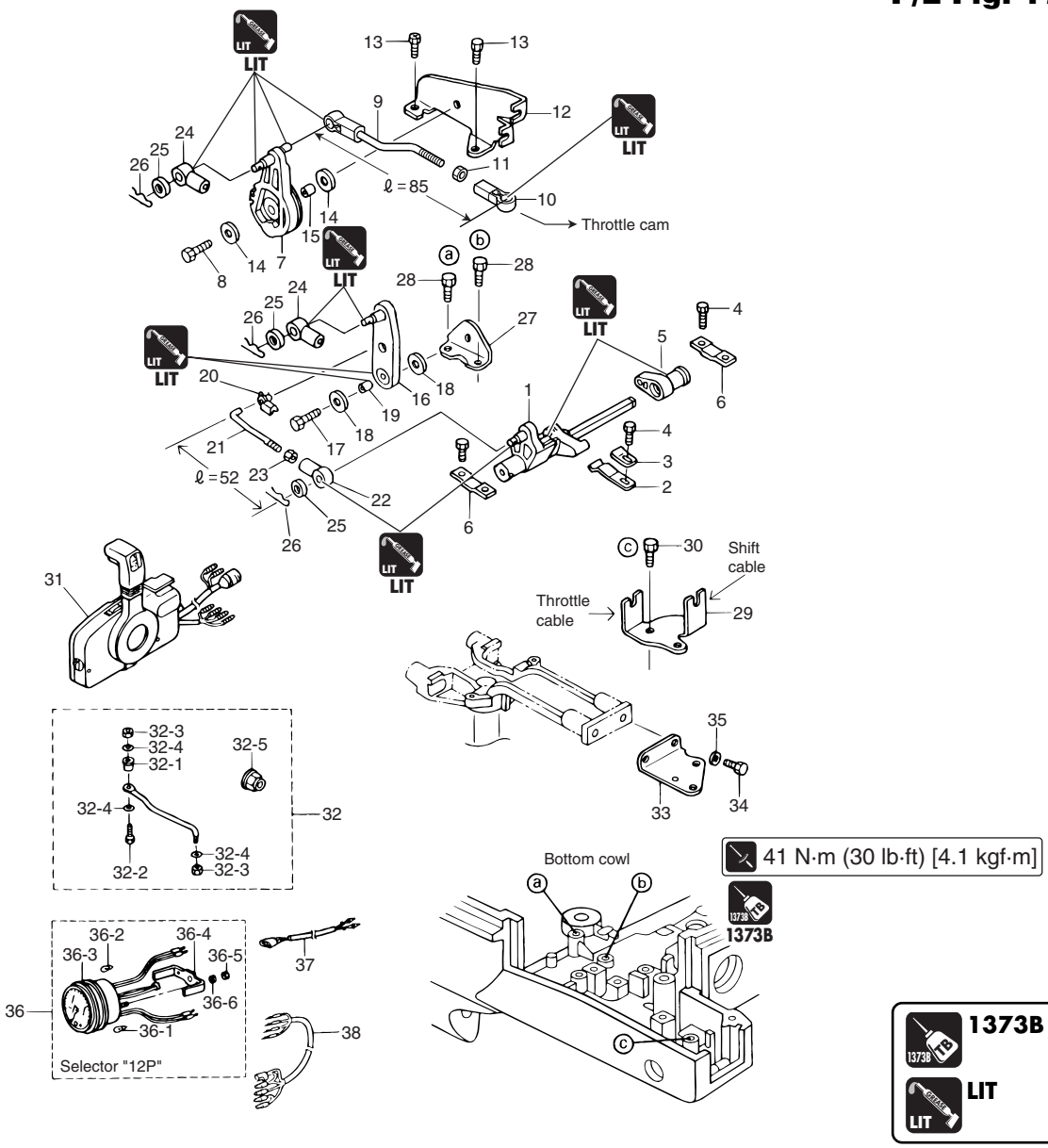

Ref. No.	Part Name	Q'ty	Remarks
1	Shift Lever Shaft	1	
2	Shift Lever Stopper	1	
3	Shift Lever Stopper Plate	1	
4	Bolt	7	M6 L=12mm 7 (※) 5 (▲)
5	Shift Rod Lever	1	
6	Shift lever Shaft Holder	3	M6 L=20mm 3 (※) 2 (▲)
7	Throttle Drum	1	
8	Bolt	1	
9	Throttle Link Rod Ass'y	1	
10	Ball Joint Connector	1	
11	Nut	1	
12	Throttle Cable Bracket	1	
13	Bolt	2	M6 L=12mm
14	Washer, 6-16-1.5	2	
15	Collar, 6.2-9-9.3	1	
16	Thift Arm (Remote Control)	1	▲
17	Bolt	1	▲M6 L=20mm
18	Washer, 6-16-1.5	2	▲
19	Collar, 6.2-9-9.3	1	▲
20	Rod Snap, 5-3	1	▲
21	Link Rod, 4.5-40.5	1	▲
22	Cable Joint	1	▲
23	Nut	1	▲
24	Cable Joint	2	▲
25	Washer, 8.5-18-1.6	3	▲

Ref. No.	Part Name	Q'ty	Remarks
26	Snap Pin, d=8	3	▲
27	Shift Arm Bracket	1	
28	Bolt	2	▲M6 L=16mm
29	Cable Clip	1	▲
30	Bolt	1	▲
31	Remote Control Box (RC5A)	1	for EPT
	Remote Control Box (RC5B)	1	for EP and EPG
32	Drag Link "H"	1	▲
32-1	Drag Link Spaer	1	▲
32-2	Bolt, 3/8-50	1	▲
32-3	Nylon Nut, 3/8	2	▲
32-4	Washer, 9.6-18-2	3	▲
32-5	Drag Link Seal Ring	1	▲
33	Steering Hook Plate	1	▲
34	Bolt	2	▲M10 L=30mm
35	Washer	2	▲
36	Tachometer (with Oil Lamp)	1	▲Option
36-1	Oil Valve, 12V-1.7W	1	▲
36-2	Meter Valve, 12V-1.7W	1	▲
36-3	Meter Damper	1	▲
36-4	Fitting Plate	1	▲
36-5	Nut	2	▲
36-6	Spring Washer	2	▲
37	Meter Lead Cable	1	※L=6000
38	Meter Lead Cable	1	▲L=2000

※ Tiller Handle Model ▲ Remote Control Model

4. Inspection Items

1) Inspection of Throttle Cable

1. Check operation of throttle cable.

2. Check throttle cable inner wire and outer wire for bend and damage. Replace if necessary.

2) Installation of Tiller Handle

1. Attach cables to throttle shaft ① as shown.

2. Install throttle shaft ① with cable to tiller handle. Be careful of location of throttle friction ②.

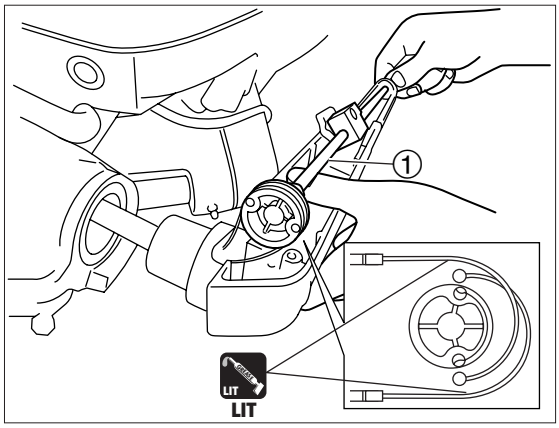

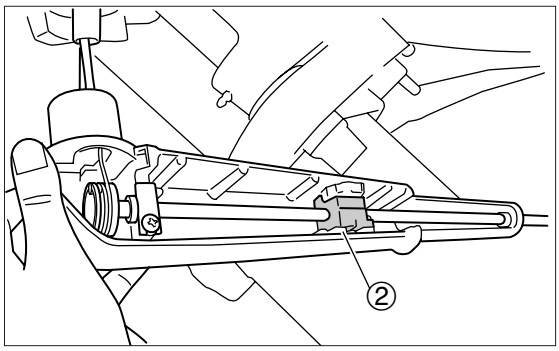

3. Install bushing ③ on the steering bracket ④.

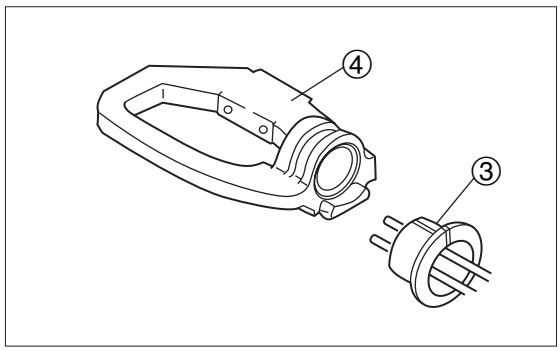

4. Attach tiller handle ass'y to steering bracket ④, and tighten nut ⑤ to specified torque.

Arrange throttle cable as shown.

Tiller Handle Nut ⑤ :
6 N·m (4 lb·ft) [0.6 kgf·m]

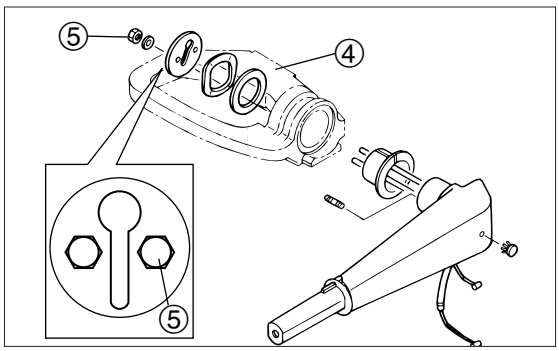

5. Install cable ⓑ of which inner wire is stretched when acceleration grip is set to full close position.

6. Then, install another cable ⓐ (of which inner wire is stretched when acceleration grip is set to full open position.)

7. Adjust position of lock nuts ⑥ of throttle cable so that throttle grip can reach full open and full close positions.

> Adjust cable tension so that it moves approximately 1mm when pushed lightly with a finger.

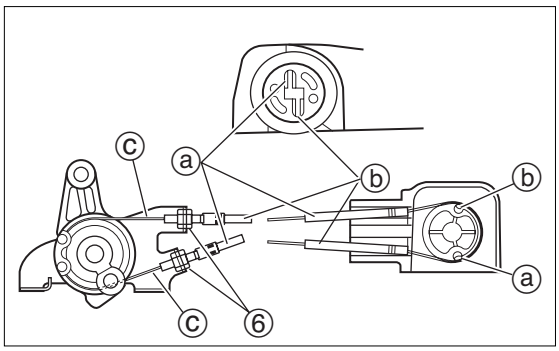

3) Adjustment of Co-pilot Plate

1. Assemble co-pilot plate and tiller handle ass'y.

2. Move co-pilot handle to the left to slide it to tightening position.

3. Tighten nylon nut ① until steering load becomes heavy.

> Tighten nylon nut ① to approximately 6 N·m (4 lb·ft) [0.6 kgf·m] and check steering load.

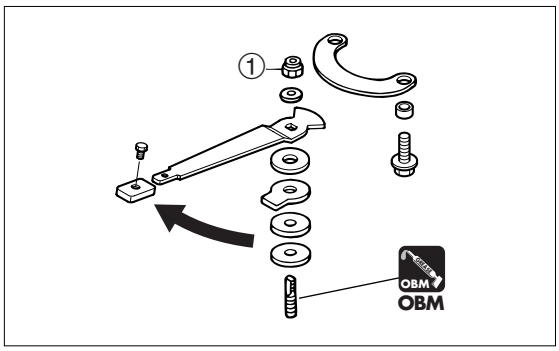

4. Move co-pilot handle to the right to slide it to release position, and check that steering can be made lightly. If not, repeat steps 2. to 4. to finely adjust.

> To prevent nylon nut from falling, tighten nut until more than one thread of bolt ⓑ can be seen above the nut.

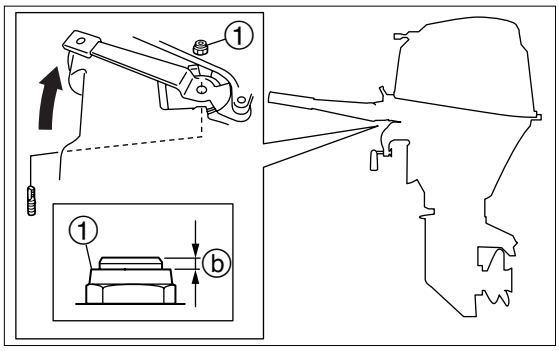

7

4) Removing Drive Shaft Housing

1. Place draining container below drain hole, and remove drain bolt to drain gear oil. "Refer to Chapter 3."

2. Remove bolt ① and remove mount cover ②.

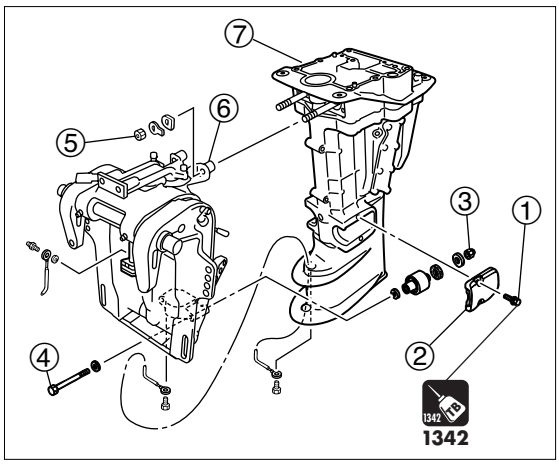

3. Remove lower mount nuts ③ and bolts ④.

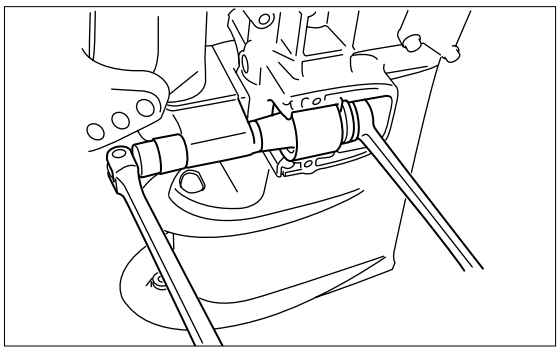

4. Turn down lock plate tab ⑧, remove upper mount nut ⑤, and then, remove drive shaft housing ass'y ⑦.

> When remove or installing drive shaft housing with power unit installed on the outboard motor, perform the work with outboard motor hung to lighten load applied to upper mount bolt.

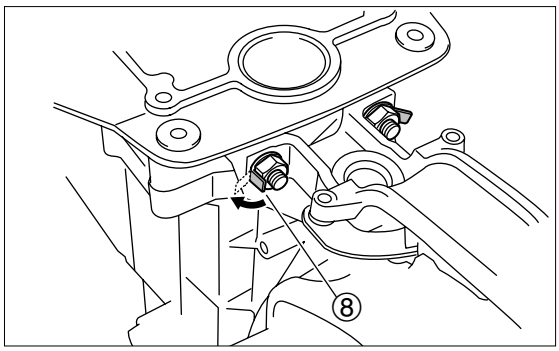

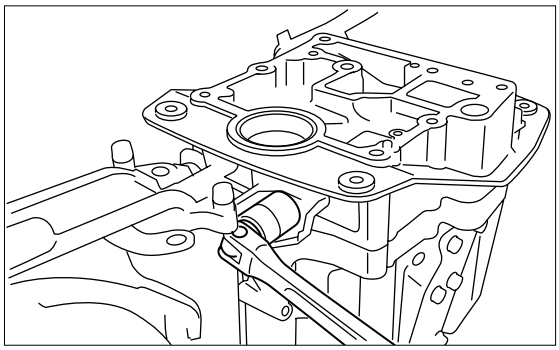

5) Pulling Out Upper Mount

1. Pull out upper mount by using mount puller kit.

If it is seized, pull out only inner tube forcibly, and then, split outer tube by using chisel to remove it.

Mount Puller Kit :
P/N. 361-72760-0

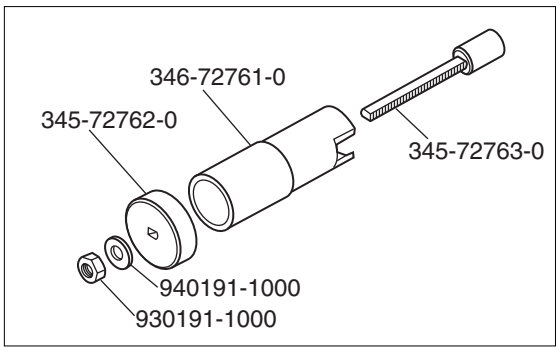

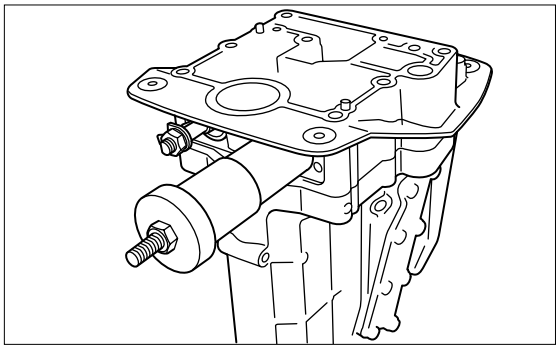

6) Disassembly of Drive Shaft Housing

1. Remove engine base ② from drive shaft housing ass'y ①.
2. Remove plunger ③ from engine base ass'y ②.
3. Remove oil strainer ④ from engine base ass'y ②.

Before removing engine base ass'y, note arrangement of oil strainer hose.

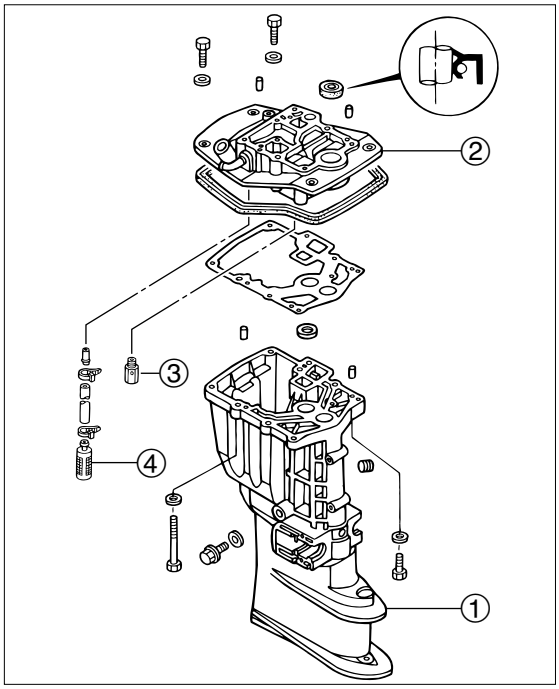

4. Remove water pipe ⑤ from drive shaft housing ①.

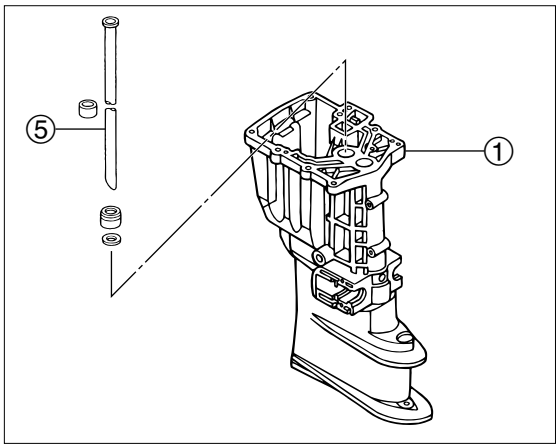

7

7) Inspection of Oil Strainer

1. Check filter for dirt and sediment. Clean, or replace if necessary.

8) Assembly of Drive Shaft Housing

1. Install water pipe ① into drive shaft housing ②.

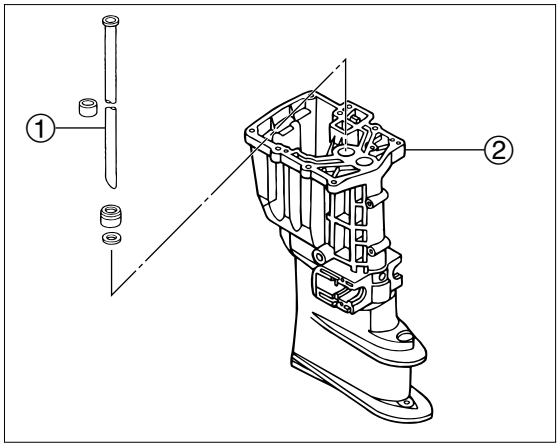

2. Install oil strainer ③ on the engine base ⑤, and secure it with ties.

3. Install plunger ④ on the engine base, and tighten it to specified torque.

> **Plunger ④ :**
> 30 N·m (22 lb·ft) [3.0 kgf·m]

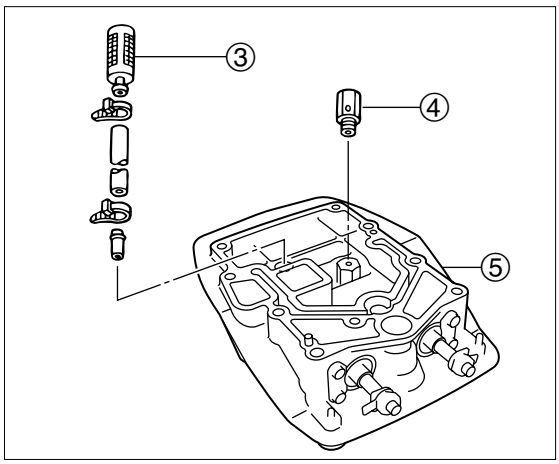

4. Install new gasket ⑦ and engine base ass'y ⑥ to drive shaft housing ⑩.

> When installing engine base, be careful not to fold oil strainer hose.

5. Secure engine base with two bolts ⑧ from above and one ⑨ from below by tightening them to specified torque.

> **Engine Base Bolts ⑧ and ⑨ :**
> 31 N·m (22 lb·ft) [3.1 kgf·m]

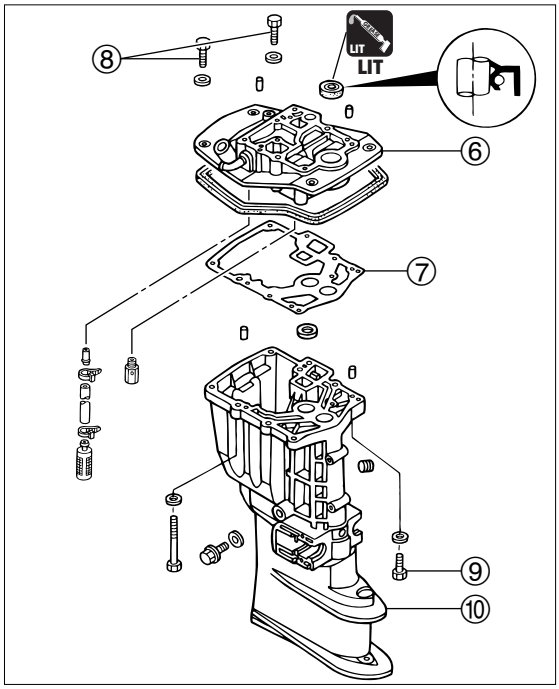

8. Put upper mount ⑪, washer, rubber and bolt ⑫ into engine base ⑤ hole, attach mount retainer ⑬, and tighten bolt ⑭ with specified torque.

Mount Retainer Bolt ⑭ :
6 N·m (4 lb·ft) [0.6 kgf·m]

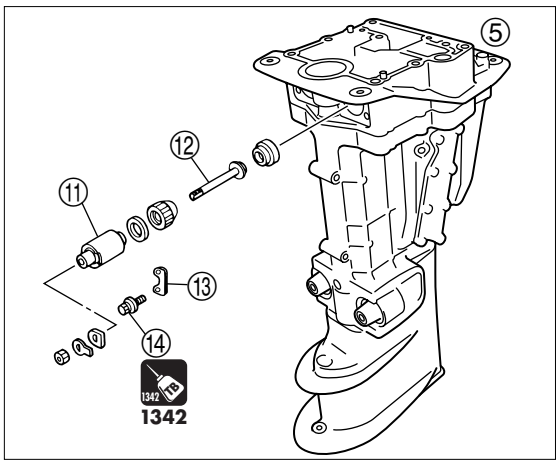

9) Installation of Drive Shaft Housing Ass'y

1. Insert upper mount bolt ① and lower mount bolt ② into swivel bracket ass'y ③ (upper and lower).

2. Put upper mount nut ④ and tighten nut ④ to specified torque. Lock nut with lock tab ⑤.

Upper Mount Nut ④ :
21 N·m (15 lb·ft) [2.1 kgf·m]

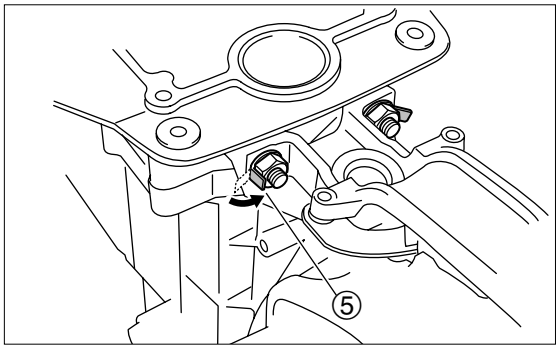

3. Put lower mount nut ⑥ and tighten to specified torque.

Lower Mount Bolt & Nut ⑥ :
40 N·m (29 lb·ft) [4.0 kgf·m]

4. Put mount cover ⑦ and tighten bolt ⑧ to specified torque.

Mount Cover Bolt ⑧ :
6 N·m (4 lb·ft) [0.6 kgf·m]

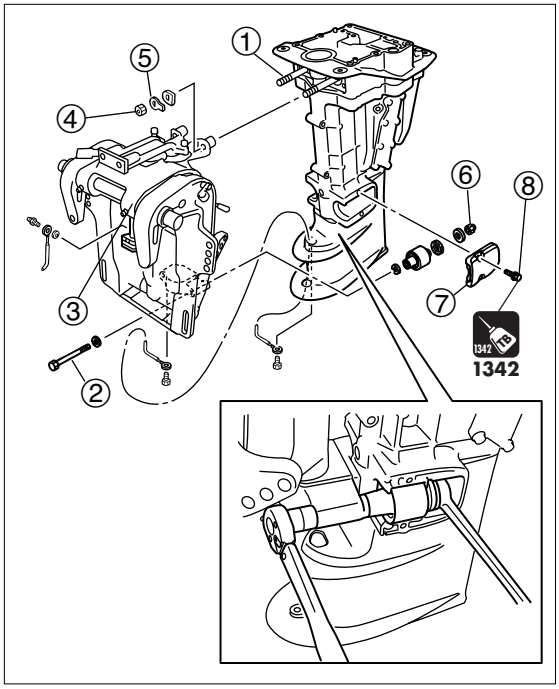

7

10) Removing Steering Shaft

1. Remove drive shaft housing ass'y. For the procedure, refer to "Removing Drive Shaft Housing" in Chapter 7.

2. Remove "C" ring ①.

3. Remove mount bracket ② by tapping it with plastic hammer.

4. Pull out steering shaft from swivel bracket ass'y ③ to remove.

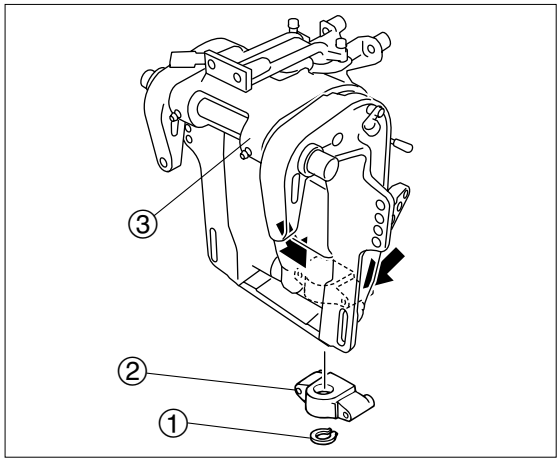

11) Installing Steering Shaft

1. Put thrust plate ① and bushing ② onto steering shaft ③.

2. Stand swivel bracket ass'y ④ vertically, and insert steering shaft ③ into swivel bracket ass'y ④.

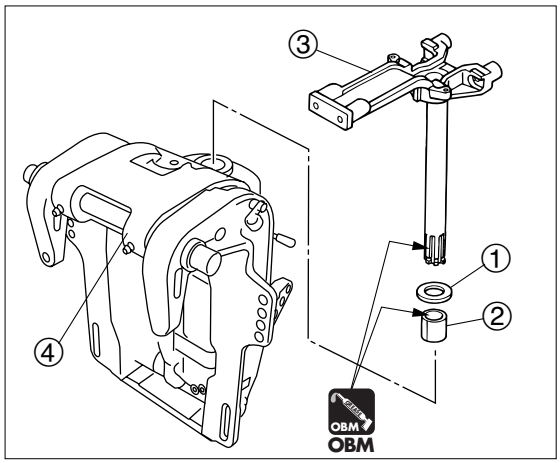

3. Put bushing ⑤, new O-ring ⑥ and thrust plate ⑦ on the steering shaft ③.

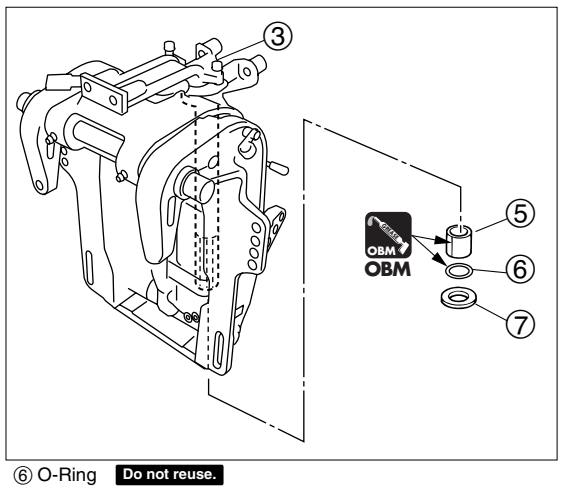

⑥ O-Ring **Do not reuse.**

4. Assemble steering shaft ③ and mount bracket ⑧ in the same directions ⓐ and ⓑ.

5. Attach "C" ring ⑨.

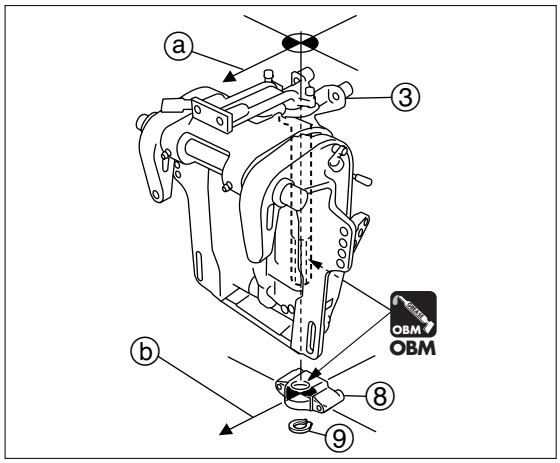

6. Put grease through grease nipple ⑩ until grease leaks from bushing (upper) ⓒ.

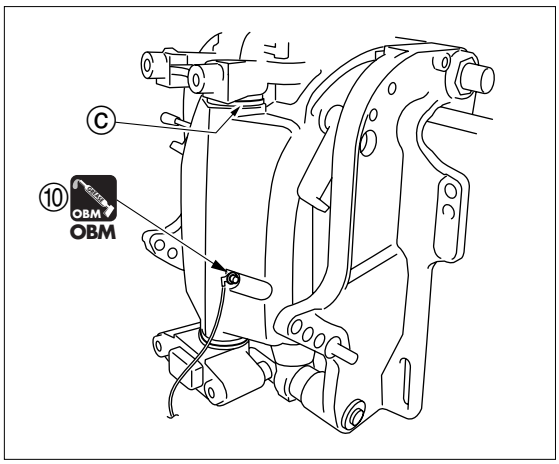

12) Removing Clamp Bracket (PTT or Gas Assistant Model)

1. Remove PTT unit or gas shock absorber. Refer to "Removing PTT Unit/Gas Shock Absorber" described later in this chapter.

2. Remove nylon nut ①, and then, clamp bracket ② and swivel bracket ③.

3. Remove shaft ⑤ from clamp bracket ④.

4. Remove trim sensor ⑥.

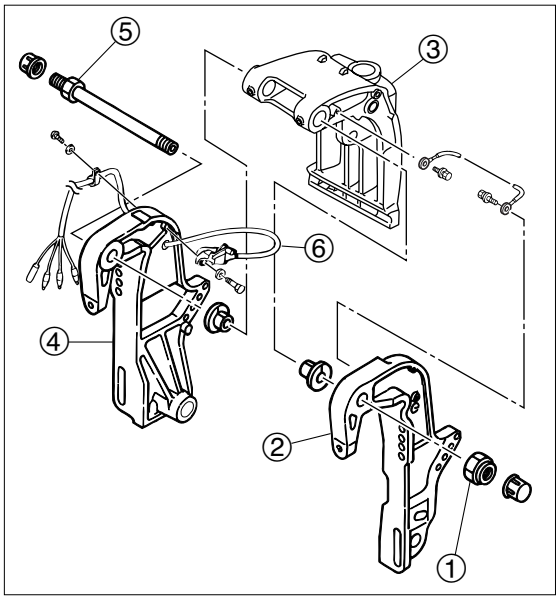

13) Removing Clamp Bracket (Mechanical Tilt Model)

1. Remove thrust rod ①.

2. Remove nylon nut ② and nut ③, and then, clamp bracket ④ and swivel bracket ⑤.

3. Remove shaft ⑦ and distance piece ⑧ from clamp bracket ⑥.

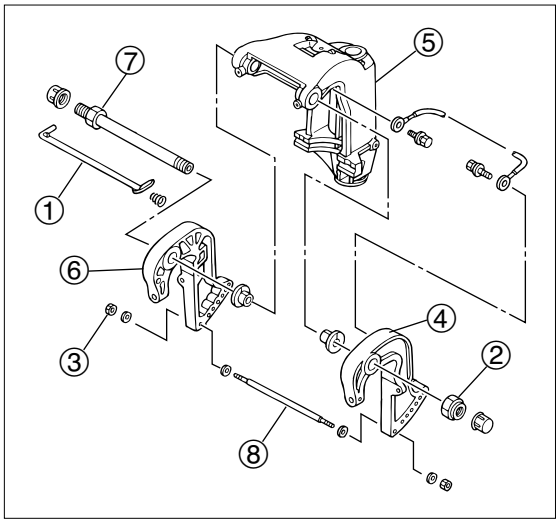

7

14) Installation of Clamp Bracket (PTT or Gas Assistant Model)

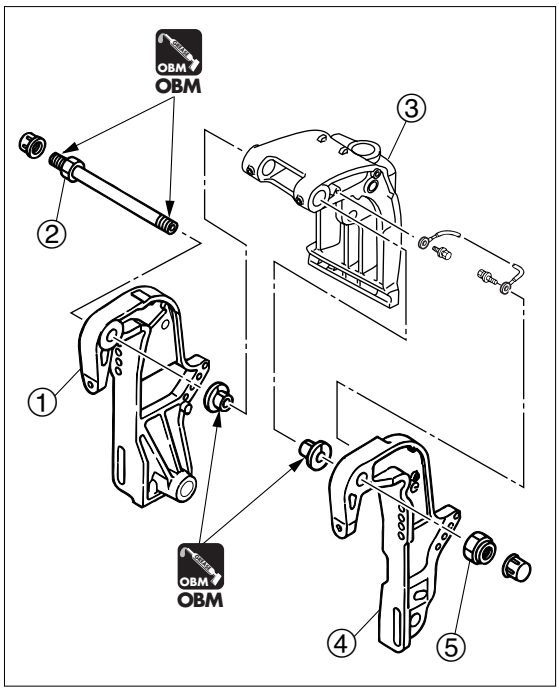

1. Install swivel bracket shaft ② to clamp bracket ①.

2. Assemble swivel bracket ③ and clamp bracket ④, and tighten nylon nut ⑤ to specified torque.

Nylon Nut ⑤ :
24N·m (17 lb·ft) [2.4kgf·m]

3. Install PTT unit or shock absorber. Refer to "Installation of PTT Unit/Shock Absorber".

4. Put grease through left and right grease nipples ⑥ until grease leaks from bushings ⓐ.

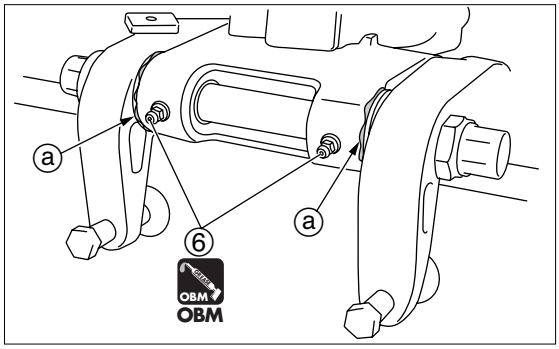

15) Installation of Clamp Bracket (Mechanical Tilt Model)

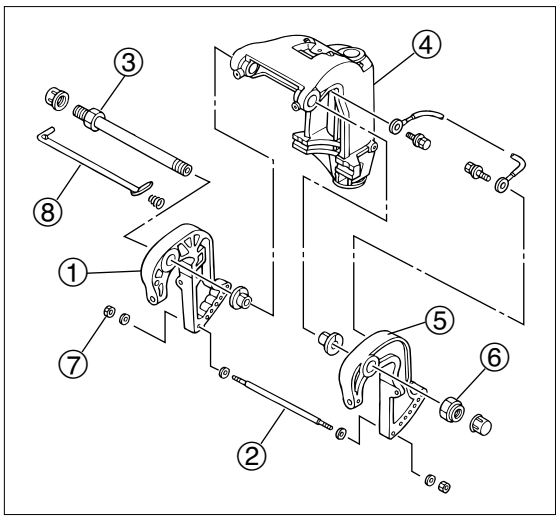

1. Install distance piece ② and swivel bracket ③ to clamp bracket ①.

2. Assemble swivel bracket ④ and clamp bracket ⑤, and tighten nylon nut ⑥ and nut ⑦ to specified torque.

Nylon Nut ⑥ :
24 N·m (17 lb·ft) [2.4 kgf·m]

Distance Piece Nut ⑦ :
6 N·m (4 lb·ft) [0.6 kgf·m]

3. Install thrust rod ⑧ and tighten clamp screw.

4. Put grease through left and right grease nipples ⑨ until grease leaks from bushings ⓐ.

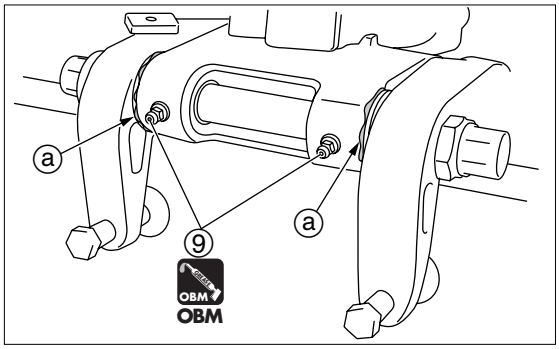

7

16) Removing PTT Unit/Gas Shock Absorber

1. Fully tilt up outboard motor and lock with tilt stopper ①.

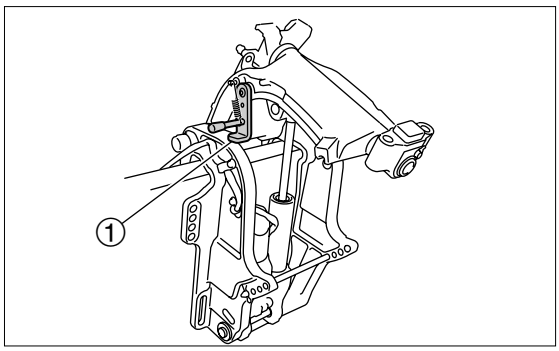

⚠ WARNING

Be sure to lock outboard motor with tilt stopper after tilting up. Leaving outboard motor without locking may lead to accidental descent due to reduction of PTT hydraulic pressure.

- IF PTT unit will not operate, open manual valve and lift up outboard motor with hands.
- When manual valve is opened, be sure to tighten it with specified torque after tilting up outboard motor.

Manual Valve :
2 N·m (1.5 lb·ft) [0.2kgf·m]

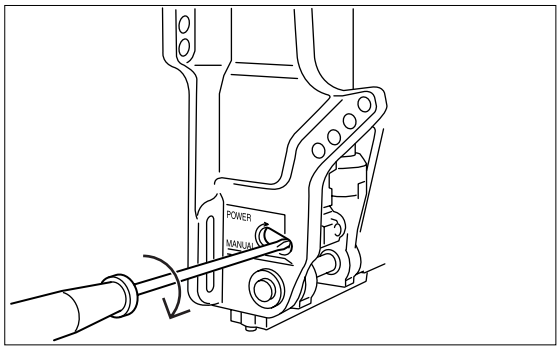

2. Remove thrust rod ②.
3. Remove bolt ③ and remove cylinder pin (upper) ④.
4. Perform tilt down operation to retract tilt rod a little.
5. Disconnect PTT motor leads from PTT solenoid.
6. Remove screw ⑤ and clamps ⑥ and ⑦, and pull out PTT motor leads.
7. Remove bolt ⑨ and earth lead ⑩ from bottom of PTT unit ⑧.
8. Remove "C" ring ⑪, and then cylinder pin (lower) ⑫.

Hold PTT unit or gas shock absorber with a hand, and use another hand to pull out cylinder pin (lower) and remove PTT unit rearward.

9. Remove PTT unit ⑧ or gas shock absorber ⑬.
10. Remove bushings ⑭, ⑮ and ⑯.

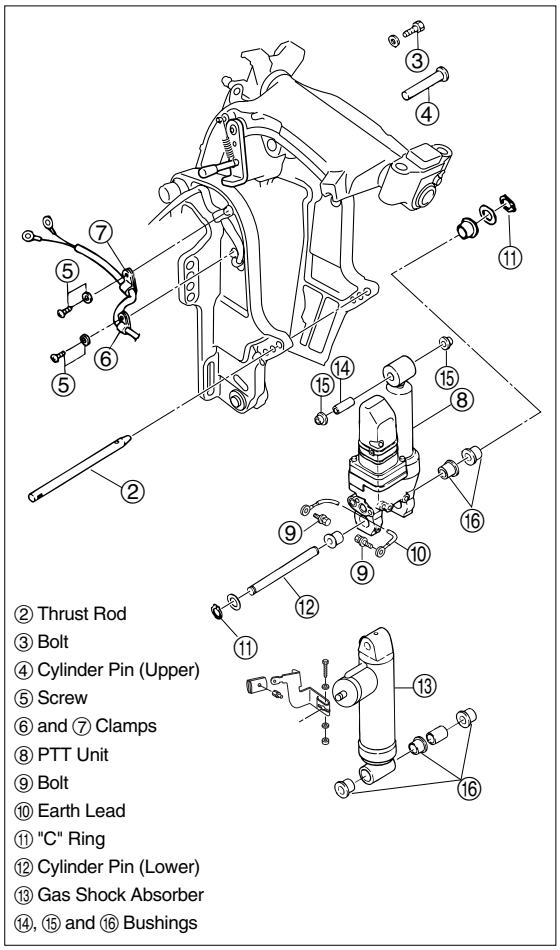

17) Removing PTT Motor

1. Remove reservoir tank ②, PTT motor ③, O-ring ④ and ⑤, coupling ⑥ from PTT unit ①.

> **⚠ CAUTION**
> - **When removing PTT motor (reservoir tank), fully extend tilt rod to prevent fluid from blasting out due to internal pressure.**
> - **Do not push down tilt rod with PTT motor removed from PTT unit, or fluid will blast out from PTT unit.**

2. Energize removed PTT motor to check that it operates. If not, replace PTT motor ass'y.

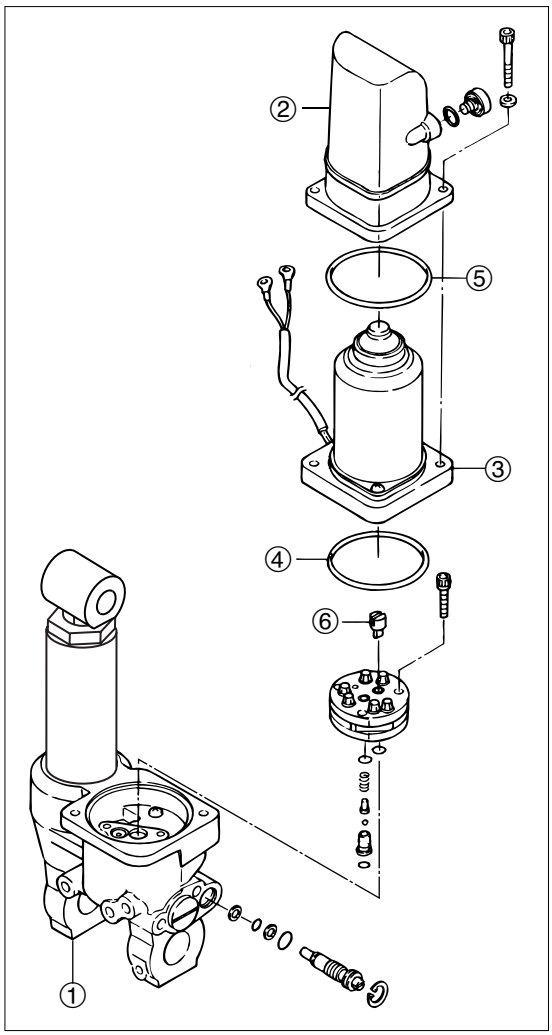

18) Removing PTT Pump and Valves

1. Remove manual valve ① and then PTT pump ass'y ②.

2. Remove valves ③ from PTT unit ④.

> Be careful not to lose removed parts which are small.

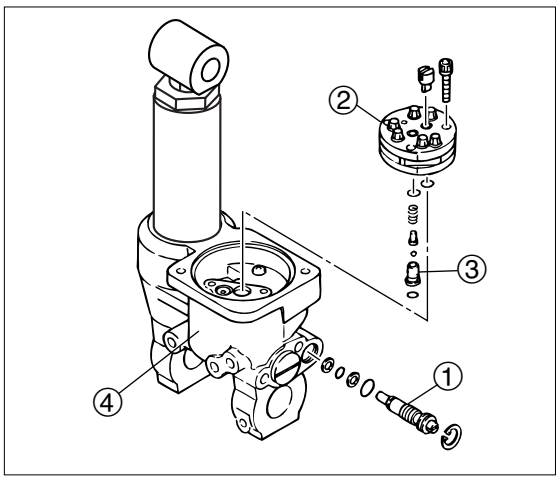

19) Inspection of PTT Pump and Valves

1. Clean piston and ball, and check them for damages and wear. Replace PTT pump if necessary.

2. Check drive gear and driven gear for damages and wear. Replace PTT pump if necessary.

3. Check valve for damage and clogging. Replace if necessary.

20) Removing Tilt Cylinder

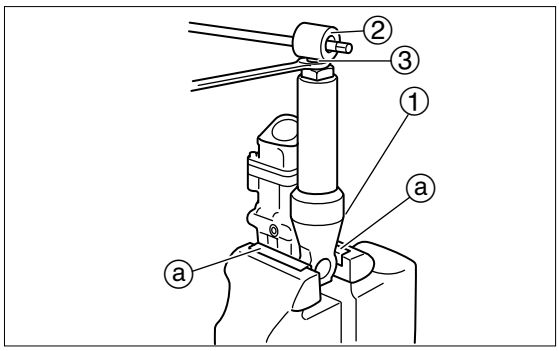

1. Retract tilt rod.
2. Use vise to fix PTT unit ① that is protected at both sides with wood pieces or aluminum plates ⓐ.
3. Secure joint ② and loosen nut ③ by using wrench, and remove joint ② and nut ③.

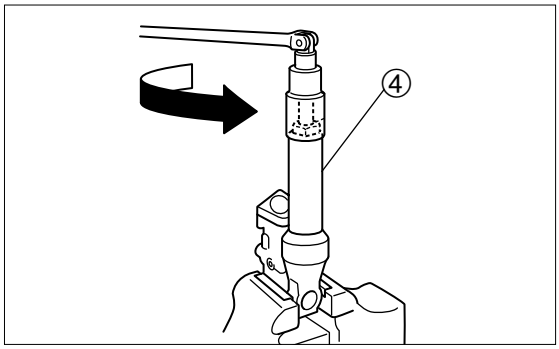

4. Use 36mm deep socket to loosen tilt cylinder ④, stretch tilt rod and remove tilt cylinder ②.

   Loosen tilt cylinder with tilt rod retracted, and then, remove with tilt rod fully stretched.

   ⚠ CAUTION

   Before removing tilt rod, make sure it is fully extended to reliese high pressure in the tilt cylinder.

5. Drain PTT fluid.

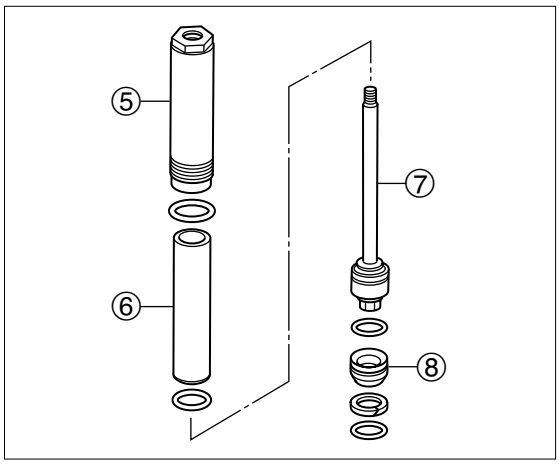

6. Remove inner tube ass'y from tilt cylinder ⑤ (including inner tube ⑥, tilt rod ass'y ⑦,and free piston ⑧).
7. Remove tilt rod ass'y ⑦ and free piston ⑧ from inner tube ⑥.

21) Inspection of Tilt Cylinder

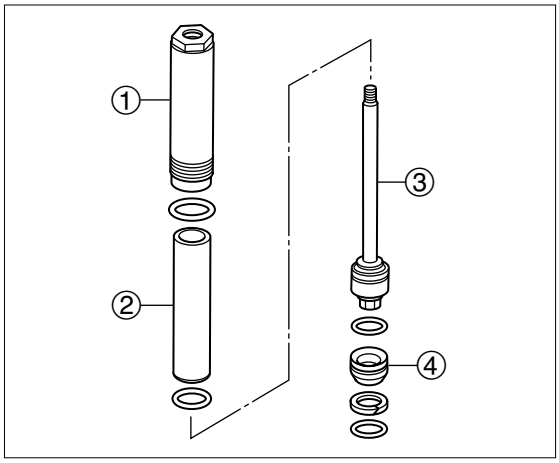

1. Check tilt cylinder ① and inner tube ② for scratch and damage on the inner and outer wall. Replace if necessary.
2. Check tilt rod ass'y ③ and free piston ④ for scratch and damage on their surfaces. Replace if necessary.
3. Check tilt rod ③ for bend and excessive corrosion. Use sand paper of No. 400 to 600 to remove moderate corrosion, or replace if necessary.

   Tilt cylinder dust seal and O-ring are not reusable. Be sure to replace.

22) Inspection of Valve

1. Check tilt rod ass'y ① check valve and valves for dirt and sediments. Clean if necessary.

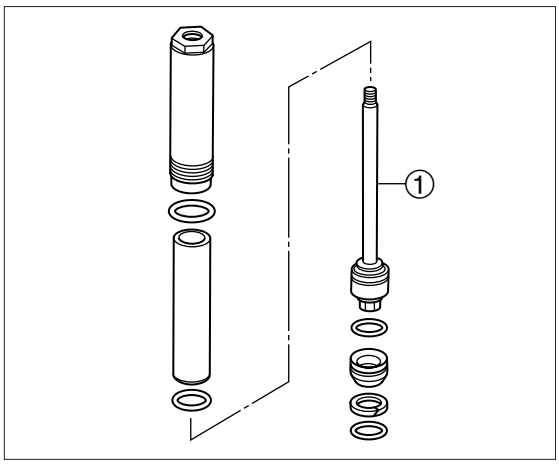

23) Installation of PTT Pump and Motor

1. Use vise to fix PTT unit ① that is protected at both sides with wood pieces or aluminum plates.

2. Assemble valve ③ and PTT pump ass'y ②, and tighten bolt ④ to specified torque.

   PTT Pump Bolt :
   5.5 N·m (4 lb·ft) [0.55 kgf·m]

3. Install manual valve ⑤ and tighten to specified torque.

   Manual Valve :
   2 N·m (1.5 lb·ft) [0.2kgf·m]

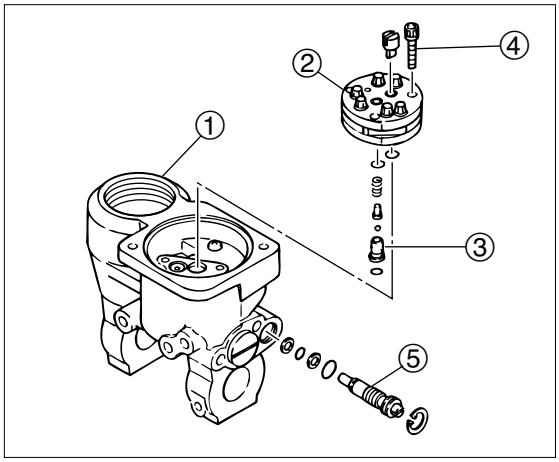

4. Fill pump chamber with PTT fluid to top edge as shown.

   Recommended PTT Fluid :
   ATF DEXRON Ⅲ

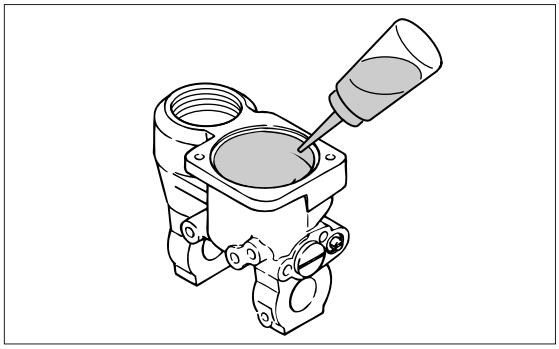

7

5. Assemble new O-rings ⑨ and ⑩, coupling ⑪, PTT motor ass'y ⑥ and reservoir tank ⑦, and tighten bolt ⑧ to specified torque.

Reserve Tank Bolt :
5 N·m (4 lb·ft) [0.5 kgf·m]

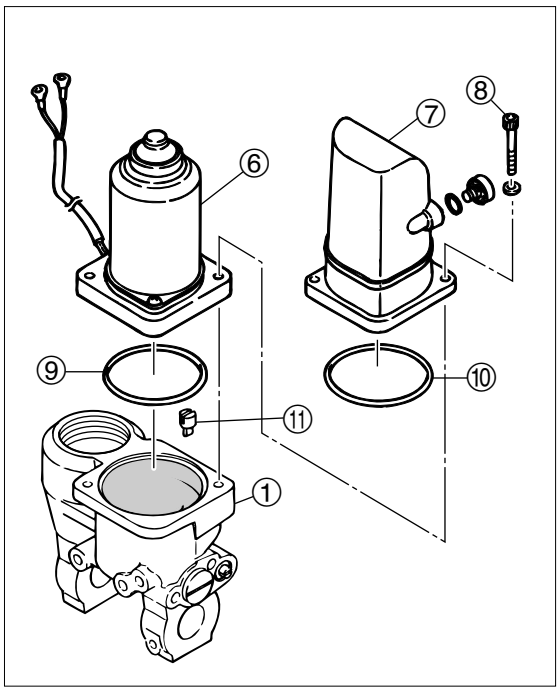

24) Assembly of Tilt Cylinder

1. Put new O-ring ② on the tilt cylinder ①.

2. Put new dust seal ③ on the tilt cylinder ①.

When putting parts in the inner tube, put them from the other side of chamfered end of the tube.
Put free piston first. Individual O-rings should be arranged in their specific locations.

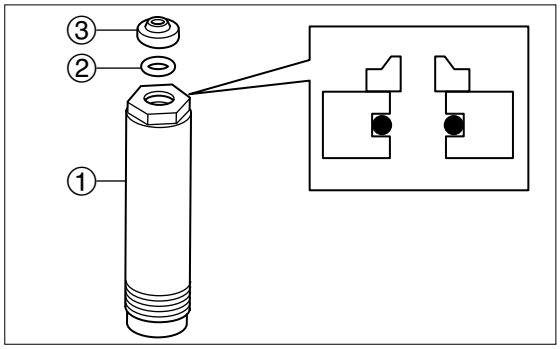

3. Put free piston ⑥, piston rod ass'y ④ and new O-rings ⑤ and ⑦ in the inner tube ⑧.

4. Install inner tube ass'y in the tilt cylinder ①.

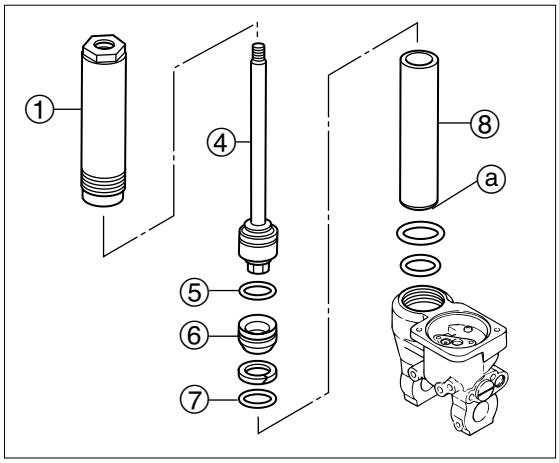

ⓐ Chamfered End

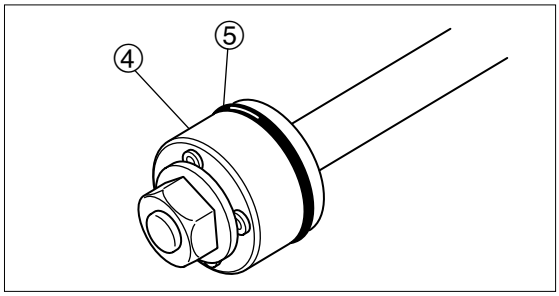

5. Add PTT fluid to the first step of bottom of tilt cylinder installation hole.

Recommended PTT Fluid :
ATF DEXRON Ⅲ

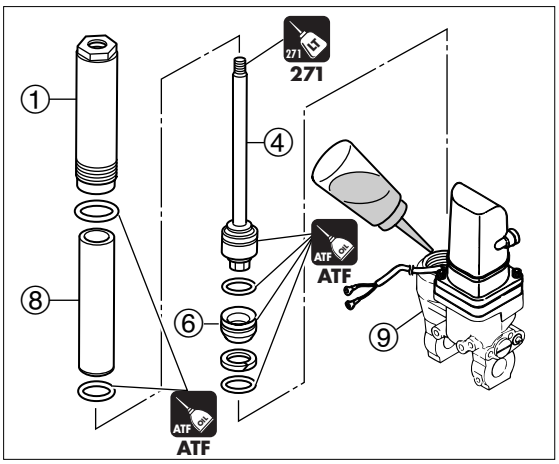

6. Put ass'y of tilt cylinder ①, tilt rod ④, inner tube ⑧, free piston ⑥ and O-ring in the PTT unit ⑨.

7. Install tilt cylinder ① and tighten to specified torque.

Tilt Cylinder End screw ① :
155 N·m (112 lb·ft) [15.5 kgf·m]

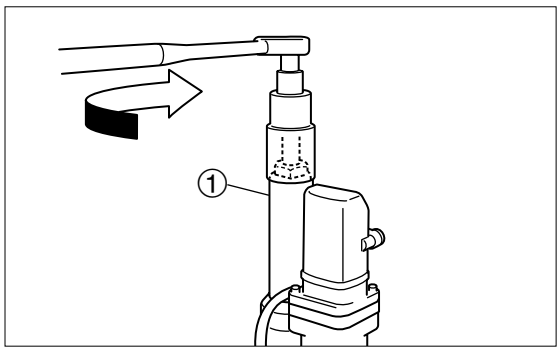

8. Put nut ⑩ and joint ⑪ on the tilt rod ass'y ④, and tighten to specified torque.

Joint Nut Tilt Rod :
35 N·m (18 lb·ft) [3.5 kgf·m]

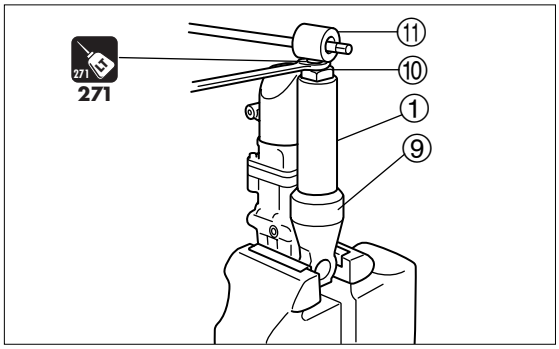

9. Add PTT fluid to specified level with tilt rod ④ fully stretched.

Recommended PTT Fluid :
ATF DEXRON Ⅲ

10. Put cap ⑫ and tighten to specified torque.

Reserve Tank Cap :
1.5 N·m (1.1 lb·ft) [0.15 kgf·m]

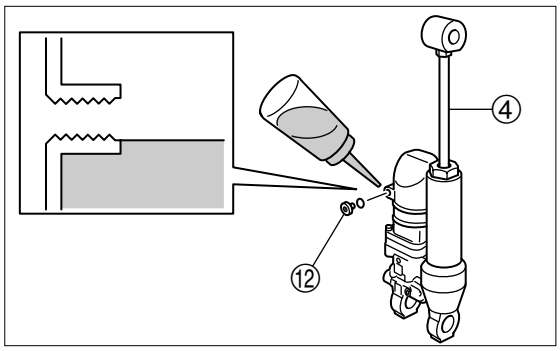

7

25) Air-Purging PTT Unit (separated from outboard motor)

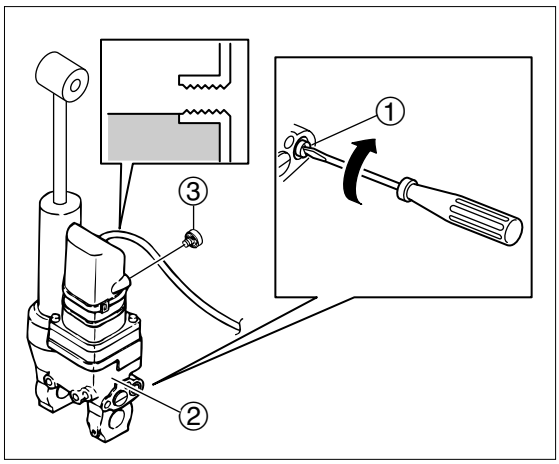

1. Turn manual valve ① counterclockwise fully.

Manual Valve :
2 N·m (1.5 lb·ft) [0.2 kgf·m]

2. Place PTT unit ② vertically.

3. Remove cap ③ and check fluid level in the reservoir tank.

⚠ WARNING

Check fluid level with tilt rod fully stretched. Removing reserve tank cap at halfway position can cause blasting out of PTT fluid, which is dangerous, and also result in inaccurate fluid level reading.

Spill of some fluid from plug hole as cap is removed indicates that gear case is filled with specified quantity of gear oil.

4. Add recommended PTT fluid to specified level if it is lacking.

Recommended PTT Fluid :
ATF DEXRON Ⅲ

5. Put cap ③ and tighten to specified torque.

Reserve Tank Cap :
1.5 N·m (1.1 lb·ft) [1.5 kgf·m]

6. Reconnect PTT motor lead wires to battery terminals to fully retract tilt rod.

Tilt Rod	PTT Motor Lead Wires	Battery Terminals
Retraction	Green (G)	+ : Positive Terminal
	Blue (L)	– : Negative Terminal

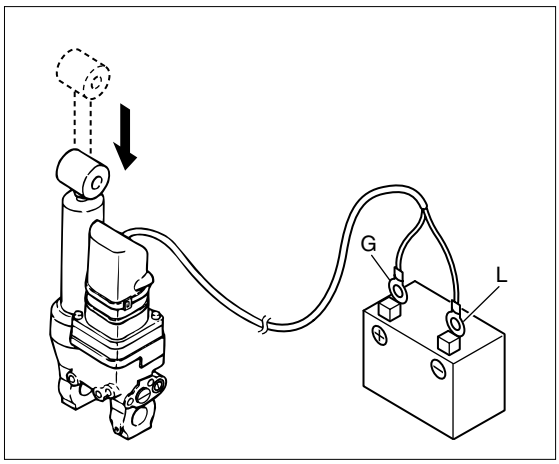

7. Reverse connection of PTT motor lead wires to battery terminals to fully stretch tilt rod.

Tilt Rod	PTT Motor Lead Wires	Battery Terminals
Stretch	Blue (L)	+ : Positive Terminal
	Green (G)	– : Negative Terminal

- Repeat above steps several times to move up and down tilt rod (When reversing motor lead wire connection, keep the connection open for two or three seconds.).
- If tilt rod does not move smoothly when connected to battery, assist the movement with hand.

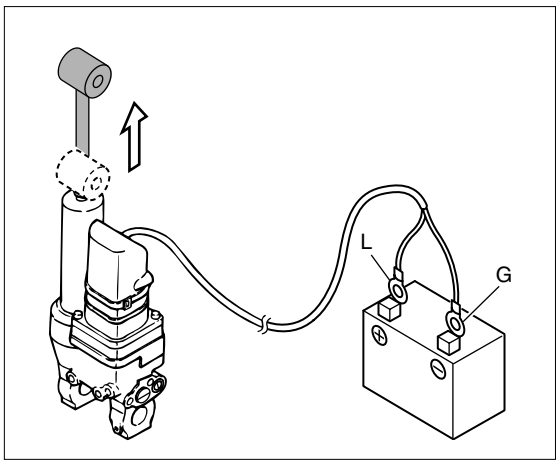

8. Check fluid level with tilt rod fully stretched. Add recommended PTT fluid to specified level if it is lacking.

Recommended PTT Fluid :
ATF DEXRON Ⅲ

7

26) Installation of PTT Unit/Gas Shock Absorber

1. Fully tilt up outboard motor and lock with tilt stopper ①.

⚠ WARNING

Be sure to lock outboard motor with tilt stopper after tilting up. Leaving outboard motor without locking may lead to accidental descent due to reduction of PTT hydraulic pressure.

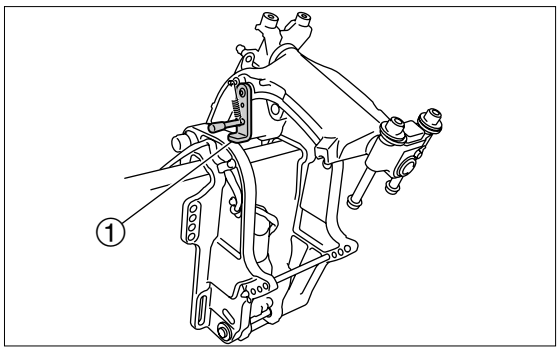

2. Reinstall bushings ②, ③ and ④ to their original positions.

3. Install PTT unit ⑤ or gas shock absorber ⑥, and then cylinder shaft (lower) ⑦.

Retract tilt rod a little.

4. Attach "C" ring ⑧.

5. Connect lead wires to battery to fully stretch tilt rod.

6. Install cylinder shaft (upper) ⑨ and tighten bolt ⑩.

7. Run PTT motor lead wires through hole and secure them using clamps ⑪ and ⑫ and screws ⑬.

8. Connect earth lead ⑭ to PTT unit bottom and secure with bolt ⑮.

9. Install thrust rod ⑯.

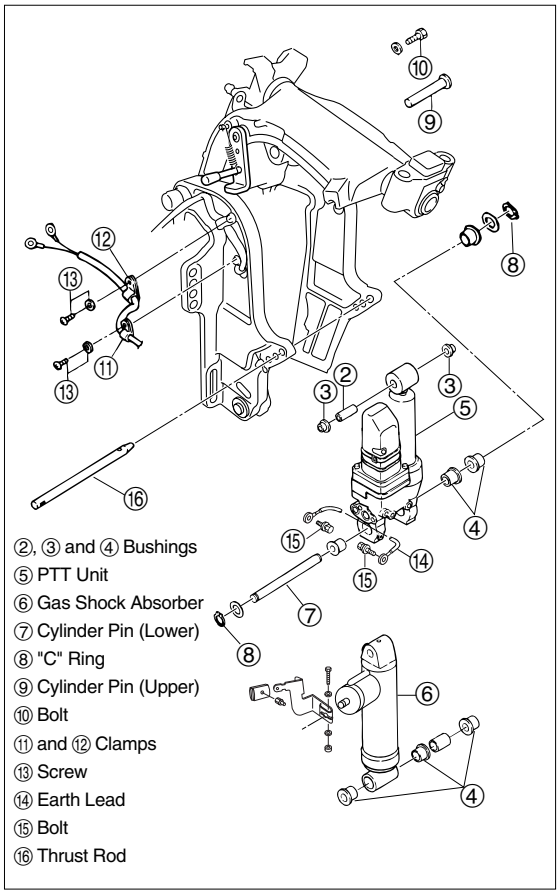

27) Air-Purging PTT Unit (installed on the outboard motor)

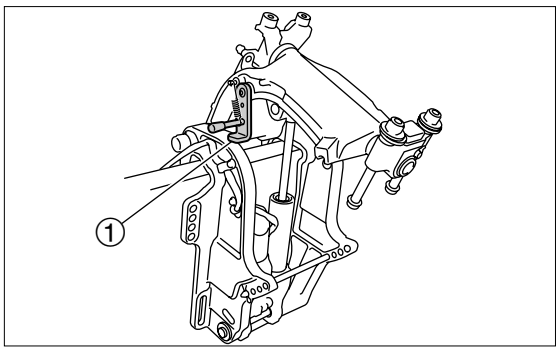

1. Install outboard motor on the boat.

2. Fully tilt up outboard motor and lock with tilt stopper.

3. Remove cap ② and check fluid level in the reservoir tank.

4. Turn manual valve counterclockwise fully.

5. Tilt up outboard motor fully with hands and let it tilt down gravitationally.

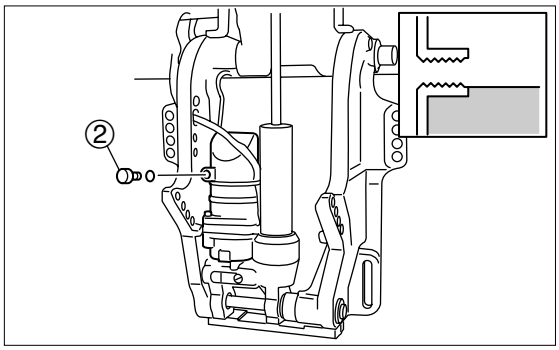

6. Turn manual valve clockwise fully.

Manual Valve :
2 N·m (1.5 lb·ft) [0.2 kgf·m]

7. Leave the unit for five minutes to stabilize PTT fluid.

8. Push PTT switch to check that outboard motor fully tilt up.

If not, loosen manual valve, tilt up with hands and lock with tilt stopper.

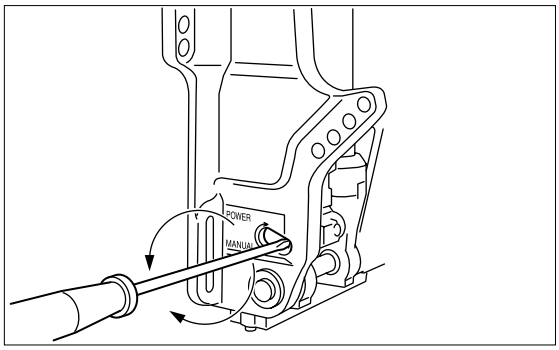

9. Lock outboard motor with tilt stopper ①.

⚠ WARNING

Be sure to lock outboard motor with tilt stopper after tilting up. Leaving outboard motor without locking may lead to accidental descent due to reduction of PTT hydraulic pressure.

10. Remove cap ② and check fluid level in the reservoir tank.

⚠ WARNING

Check PTT fluid level with outboard motor fully tiled up. Removing reserve tank cap at halfway position can cause blasting out of PTT fluid, which is dangerous, and also result in inaccurate fluid level reading.

Spill of some fluid from plug hole as cap is removed indicates that gear case is filled with specified quantity of gear oil.

7

11. Add recommended PTT fluid to specified level if it is lacking.

Recommended PTT Fluid :
ATF DEXRON Ⅲ

12. Reservoir tank cap and tighten to specified torque.

Reserve Tank Cap :
1.5 N·m (1.1 lb·ft) [0.15 kgf·m]

13. Repeat steps from 5. to 12. until specified PTT fluid level is attained.

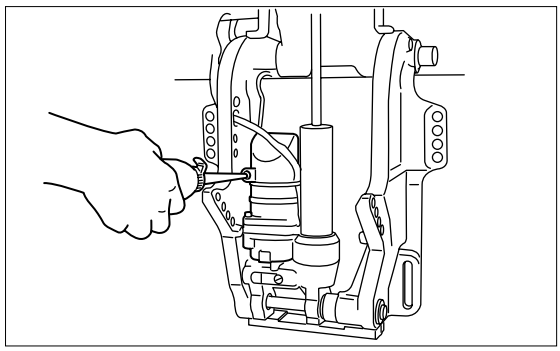

28) Inspection of PTT Solenoid

This test can be made without removing parts.

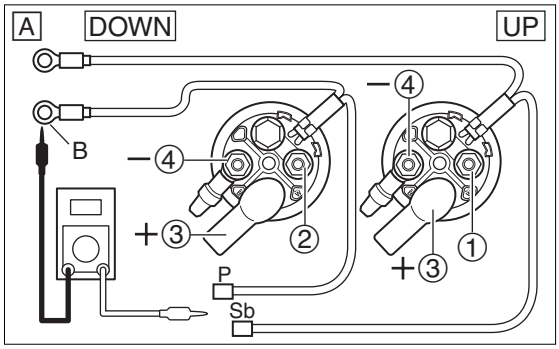

1. Disconnect positive and negative cables from battery.

2. Disconnect PTT motor leads from terminals ① and ②.

3. Check electrical conductivity of PTT solenoid. Replace if other than specified conditions.

PTT Solenoid Conductivity	
Sky Blue (Sb) - Black (B) Pink (P) - Black (B)	Conductive
Terminal ① - Terminal ④ (–) Terminal ② - Terminal ④ (–)	Conductive
Terminal ① - Terminal ③ (+) Terminal ② - Terminal ③ (+)	Non-conductive

4. Connect circuit tester leads between terminals ① and ③.

5. As shown in diagram B, connect sky blue (Sb) terminal to positive battery terminal, and black (B) lead wire to negative battery terminal.

6. Check electrical conductivity between terminals ① and ③. If non conductive, replace UP side PTT solenoid.

7. Connect circuit tester leads between PTT solenoid terminals ② and ③.

8. As shown in diagram C, connect pink (P) terminal to positive battery terminal, and black (B) lead wire to negative battery terminal.

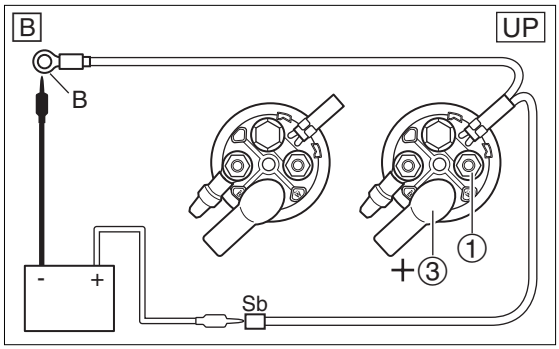

9. Check electrical conductivity between terminals ② and ③. If non conductive, replace DOWN side PTT solenoid.

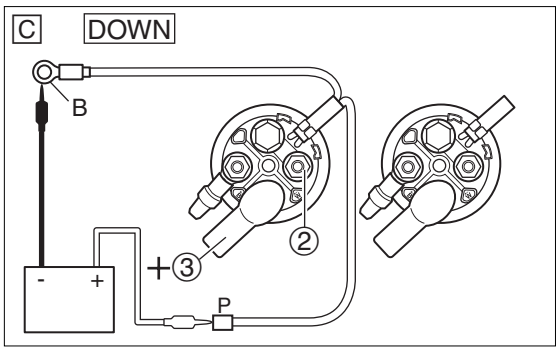

29) Inspection of PTT Switch

1. Check electrical conductivity of PTT switch. Replace if other than specified conditions.

Lead Wires

Switch Position	Sky Blue (Sb)	Red (R)	Pink (P)
UP (Tilt Up)	○	○	
Free			
DOWN (Tilt Down)		○	○

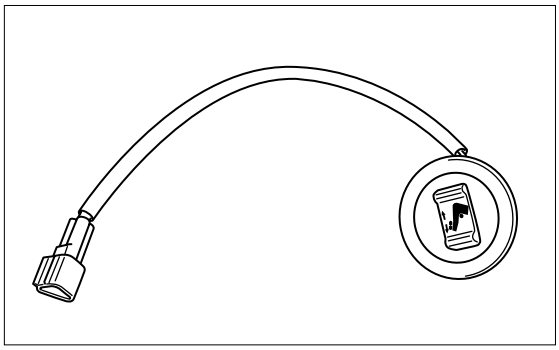

7

8

Electrical System

1 Special Tools ····· 8-2

2 Electrical Component Layout ····· 8-3

Port Side View ····· 8-3

Bow Side View ····· 8-4

Starboard Side View ····· 8-5

Top View ····· 8-6

Tiller Handle Model ····· 8-7

3 Parts Layout ····· 8-8

Magneto & ECU ····· 8-8

Electric Parts ····· 8-9

Starter Motor ····· 8-11

Fuel Pump, Fuel Rail, Vapor Separator ····· 8-12

4 Ignition System, Ignition Control System ··· 8-14

1) Inspection of Ignition Sparks ····· 8-14

2) Inspection of Plug Cap ····· 8-14

3) Inspection of Ignition Coils ····· 8-15

4) Inspection of Alternator ····· 8-15

5) Inspection of Pulser Coil ····· 8-16

6) Inspection of Oil Pressure Switch ····· 8-16

7) Inspection of Water Temperature Sensor ··· 8-17

8) Inspection of Neutral Switch (Tiller Handle Model) ··· 8-17

9) Inspection of Start Switch (Tiller Handle Model) ··· 8-17

10) Inspection of Stop Switch ····· 8-18

5 Fuel Control System ····· 8-19

1) Inspection of Injectors ····· 8-19

2) Inspection of ISC Valve ····· 8-19

3) Inspection of MAT (Manifold Temperature) Sensor ··· 8-20

4) Inspection of Fuel Feed Pump (FFP) ····· 8-20

5) Inspection of Throttle Position Sensor ····· 8-20

6 Starting System ····· 8-21

1) Inspection of Fuse ····· 8-21

2) Inspection of Starter Solenoid ····· 8-21

3) Disassembly of Starter Motor ····· 8-21

4) Inspection of Starter Motor Pinion ····· 8-22

5) Inspection of Armature ····· 8-22

6) Inspection of Brushes ····· 8-23

7) Inspection of Starter Motor Operation ····· 8-23

7 Battery Charging System ····· 8-24

1) Inspection of Alternator ····· 8-24

2) Inspection of Rectifier ····· 8-24

8 ECU Coupler ····· 8-25

1. Special Tools

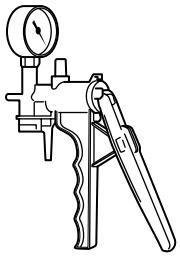	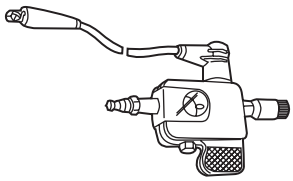
Vacuum/Pressure Gauge P/N. 3AC-99020-0	Spark Tester P/N. 3F3-72540-0
Inspecting pressure	Inspecting sparks

2.Electrical Component Layout

Port Side View

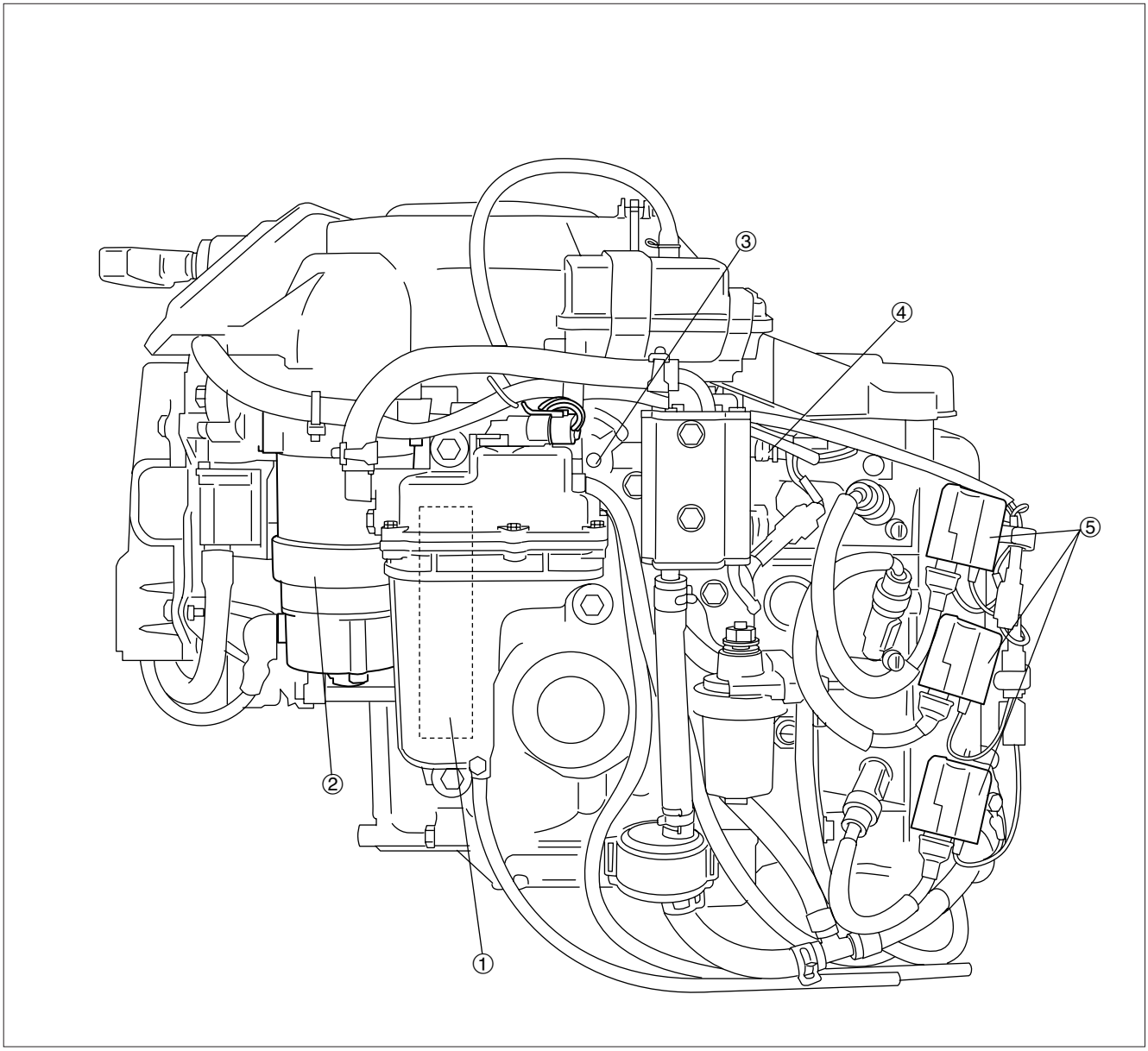

① Fuel Feed Pump (FFP) : Interior of Vapor Separator
② Starter Motor
③ Oil Pressure Switch
④ Water Temperature Sensor
⑤ Ignition Coil

Bow Side View

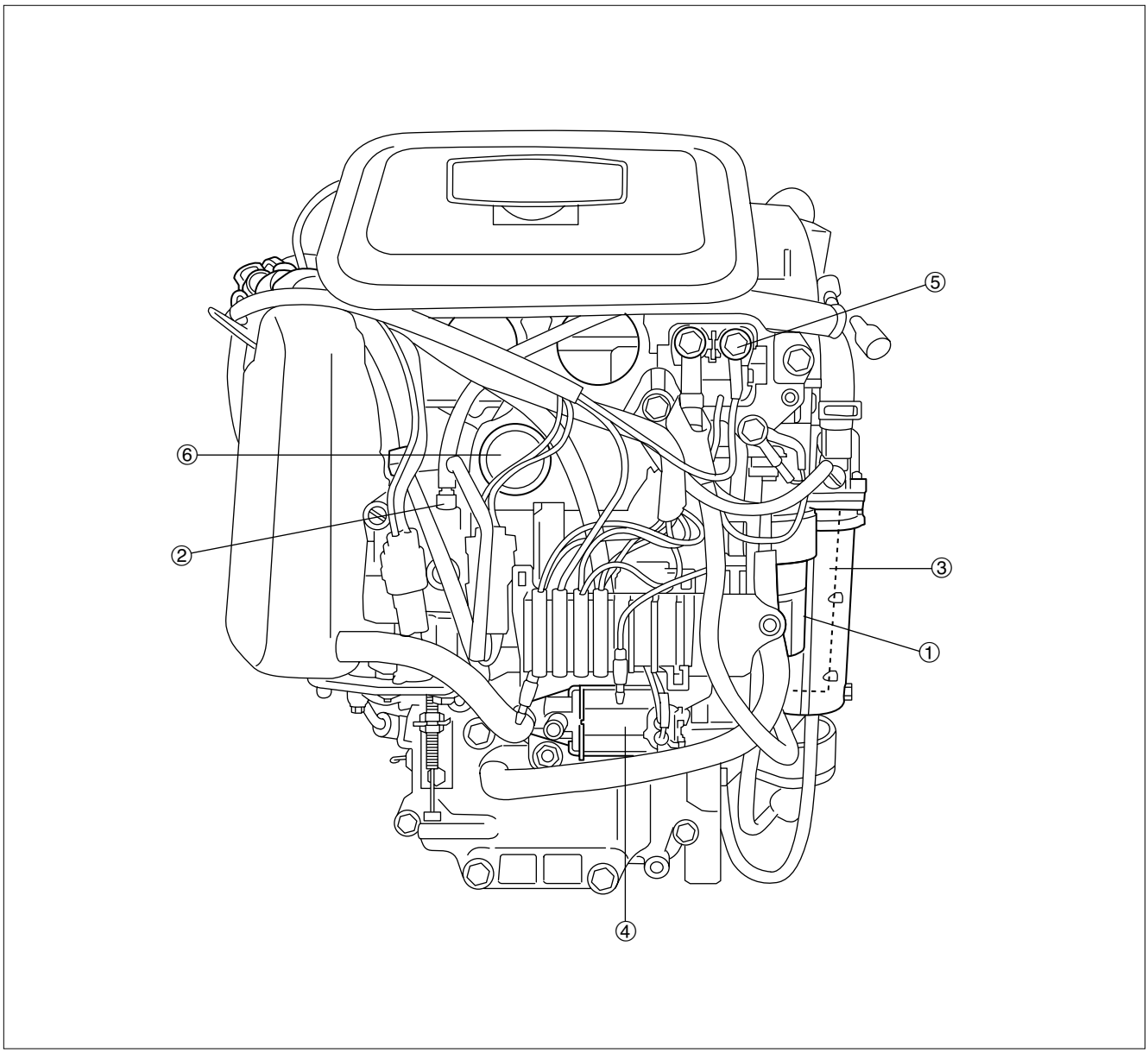

① Starter Motor
② Throttle Position Sensor
③ Fuel Feed Pump (FFP) : Interior of Vapor Separator
④ ISC (Idle Speed Control) Valve
⑤ Starter Solenoid
⑥ Warning Buzzer

Starboard Side View

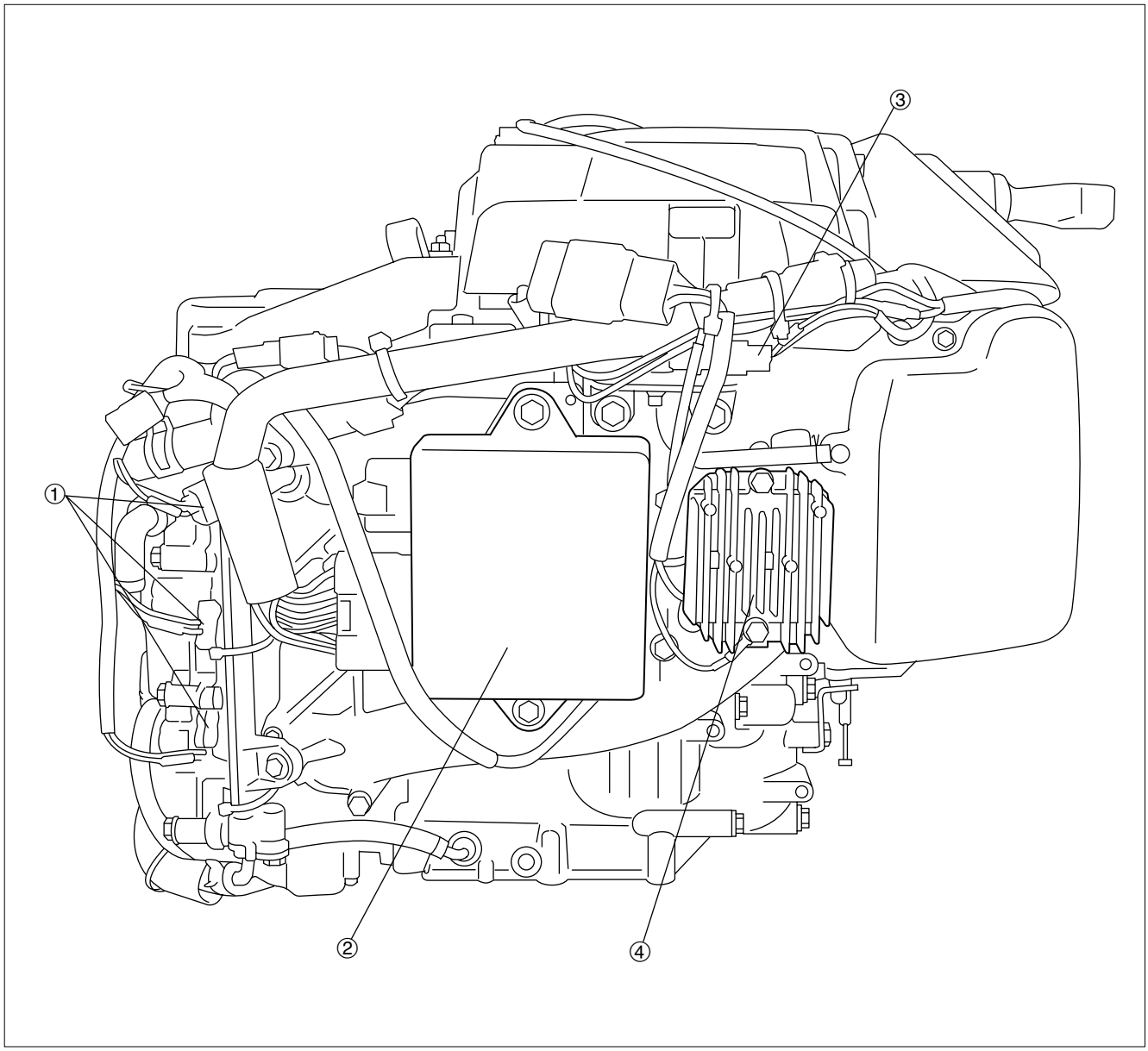

① Injector
② ECU (Electronic Control Unit)
③ MAP (Manifold Pressure) Sensor
④ Rectifier

Top View

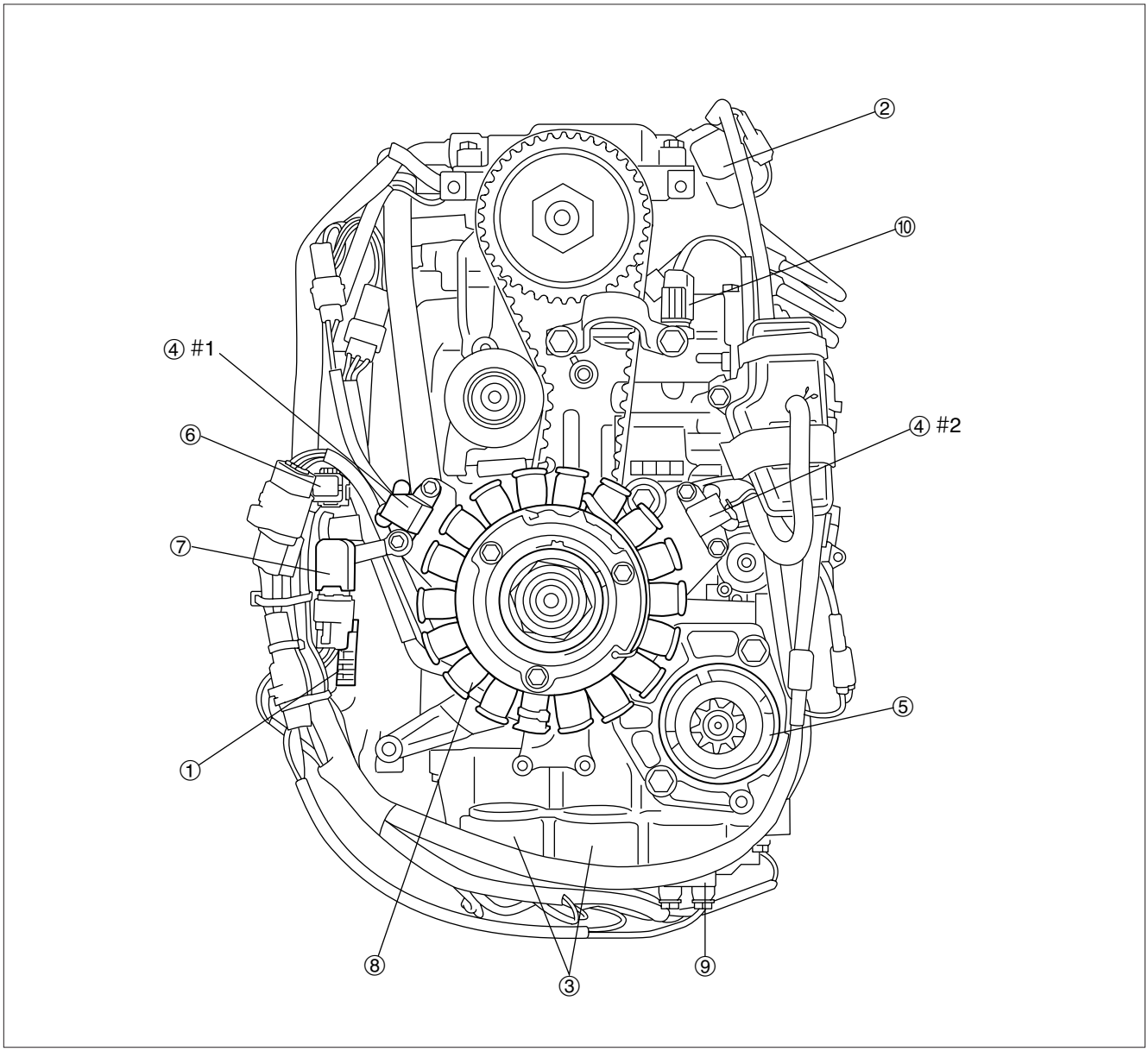

① Rectifier
② Ignition Coil
③ PTT Solenoid
④ Pulser Coils
⑤ Starter Motor
⑥ Fuse (20A)
⑦ MAP (Manifold Pressure) Sensor
⑧ Alternator (Exciter Coil/Charge Coil/ECU Charge Coil)
⑨ Starter Solenoid
⑩ Water Temperature Sensor

Tiller Handle Model

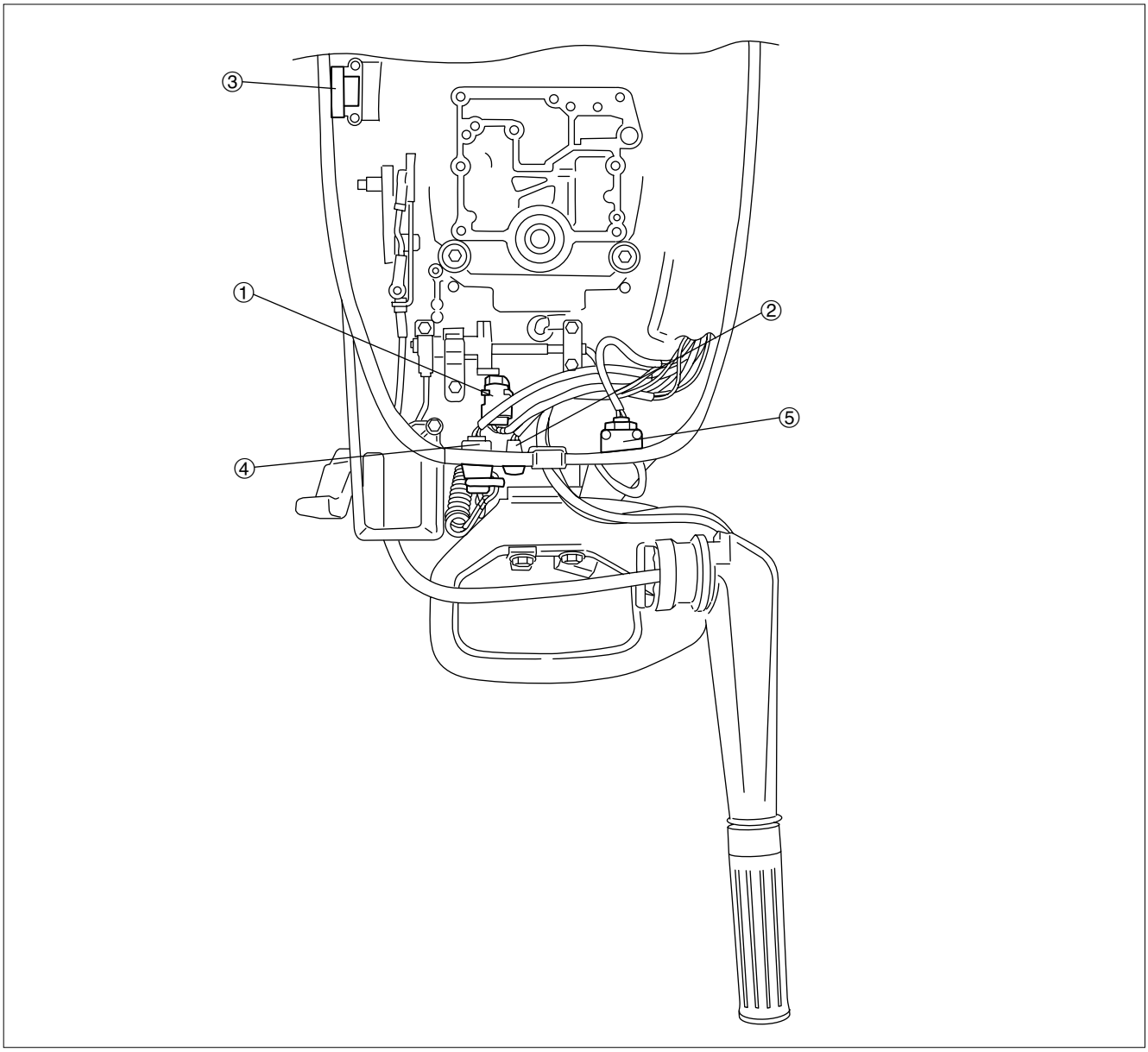

① Neutral Switch (Tiller Handle, Electric Start Model)
② Warning Lamp (LED)
③ PTT Switch (PTT Model)
④ Stop Watch
⑤ Neutral Switch (Tiller Handle, Electric Start Model)

3.Parts Layout

P/L Fig. 8

Magneto & ECU

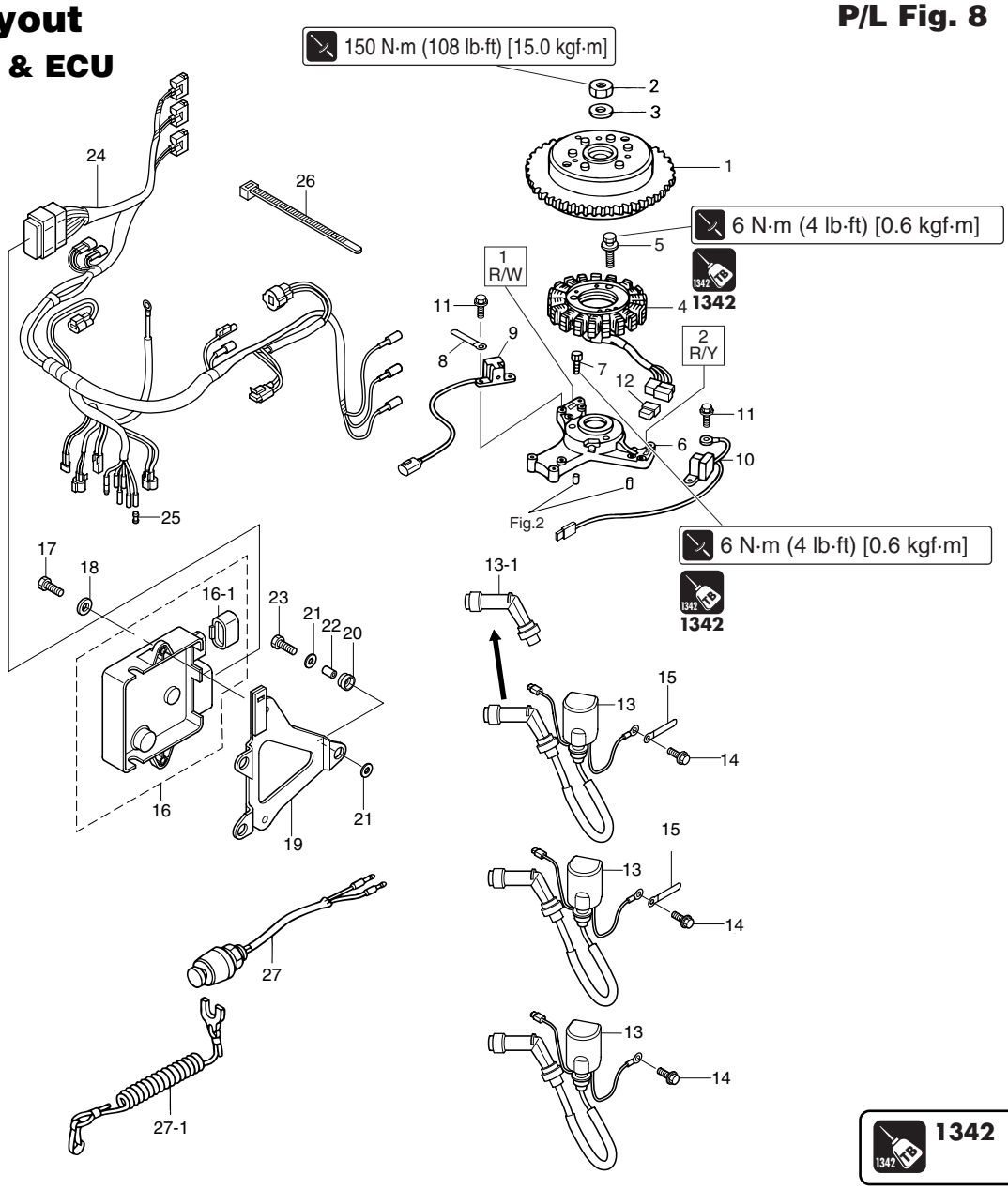

Ref. No.	Description	Q'ty	Remarks
1	Flywheel Cup	1	with FF 90 Ring Gear
2	Nut, M18-P1.5	1	
3	Washer, 19-34-3	1	
4	Alternator	1	
5	Bolt	3	M6 L=25mm
6	Coil Bracket	1	
7	Bolt	3	M6 L=30mm
8	Clamp, 6.5-47.5P	1	
9	Pulser Coil # 1	1	
10	Pulser Coil # 2	1	
11	Bolt	4	M5 L=12mm
12	Plug (Alternator Coupler)	1	Recoil Start Model
13	Ignition Coil	3	
13-1	Plug Cap (Resistance)	3	
14	Bolt	3	M6 L=20mm
15	Clamp, 6.5-47.5P	2	
16	ECU, 30	1	
	ECU, 30	1	for EU
	ECU, 25	1	
	ECU, 25	1	for EU
16-1	Plug (ECU)	1	
17	Bolt	2	M6 L=16mm
18	Washer, 6-16-1.5	2	
19	ECU Bracket	1	

※ Tiller Handle Model

Ref. No.	Description	Q'ty	Remarks
20	Rubber Mount	3	
21	Washer	6	
22	Collar, 6.2-9-7.4	3	
23	Bolt	3	M6 L=20mm
24	ECU Cord	1	※
	ECU Cord	1	▲
25	Cable Terminal Plug	3	※
26	Lead Wire Band, L=150	4	
27	Stop Watch	1	
27-1	Stop Switch Lanyard	1	

▲ Remote Control Model

Electric Parts

P/L Fig. 9

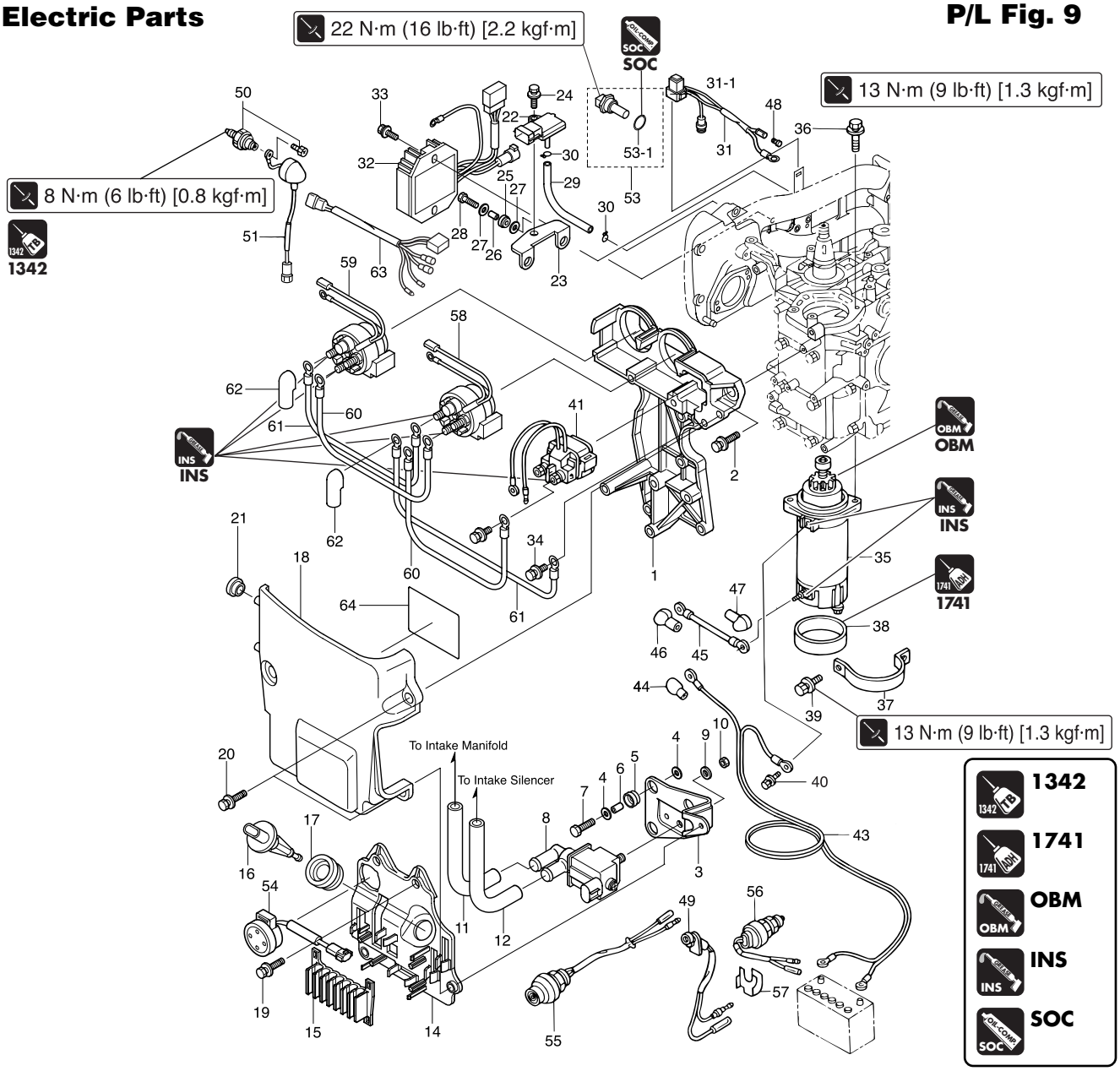

Ref. No.	Description	Q'ty	Remarks
1	Electric Bracket	1	
2	Bolt	5	M6 L=25mm
3	Plate	1	
4	Washer, 6-16-1.5	6	
5	Rubber Mount	3	
6	Collar, 6.2-9-7.4	3	
7	Bolt	3	M6 L=20mm
8	ISC Valve	1	
9	Washer	1	
10	Nut	1	
11	Fuel Hose	1	ISC Valve to Intake Manifold
12	Fuel Hose	1	Intake Silencer to ISC Valve
14	Cord Holder	1	
15	Holder	1	
16	Mat Sensor	1	
17	Mat Sensor Grommet	1	
18	Electric Bracket Cover	1	
19	Bolt	3	M6 L=25mm
20	Bolt	2	M6 L=20mm
21	Grommet, 17-2.7	1	
22	Map Sensor	1	
23	Map Sensor Plate	1	
24	Bolt	1	M6 L=16mm
25	Rubber Mount	2	

Ref. No.	Description	Q'ty	Remarks
26	Collar, 6.2-9-7.4	2	
27	Washer, 6-16-1.5	4	
28	Bolt	2	M6 L=20mm
29	Hose, L=110	1	Map Sensor to I/Manifold
30	Clip, ø7	2	
31	Fuse Cable	1	※
31-1	Fuse (20A)	2	※
32	Rectifier	1	※
33	Bolt	2	※ M6 L=25mm
34	Bolt	1	※ M6 L=12mm
35	Starter Motor	1	※
36	Bolt	2	※ M8 L=30mm
37	Starter Motor Bank	1	※
38	Starter Motor Damper	1	※
39	Bolt	2	※ M8 L=20mm
40	Bolt	1	※ M6 L=12mm
41	Starter Solenoid	1	※ with two Bolts
43	Battery Cable	1	※ L=2500
44	Terminal Cap	1	※
45	Starter Cable	1	※ L=270
46	Terminal Cap	1	※ Starter Solenoid (Red)
47	Terminal Cap	1	※ Starter Motor (Red)
48	Cable Terminal Plug	1	※
49	Warning Lamp	1	

※ Electric Start Model

Electric Parts

P/L Fig. 9

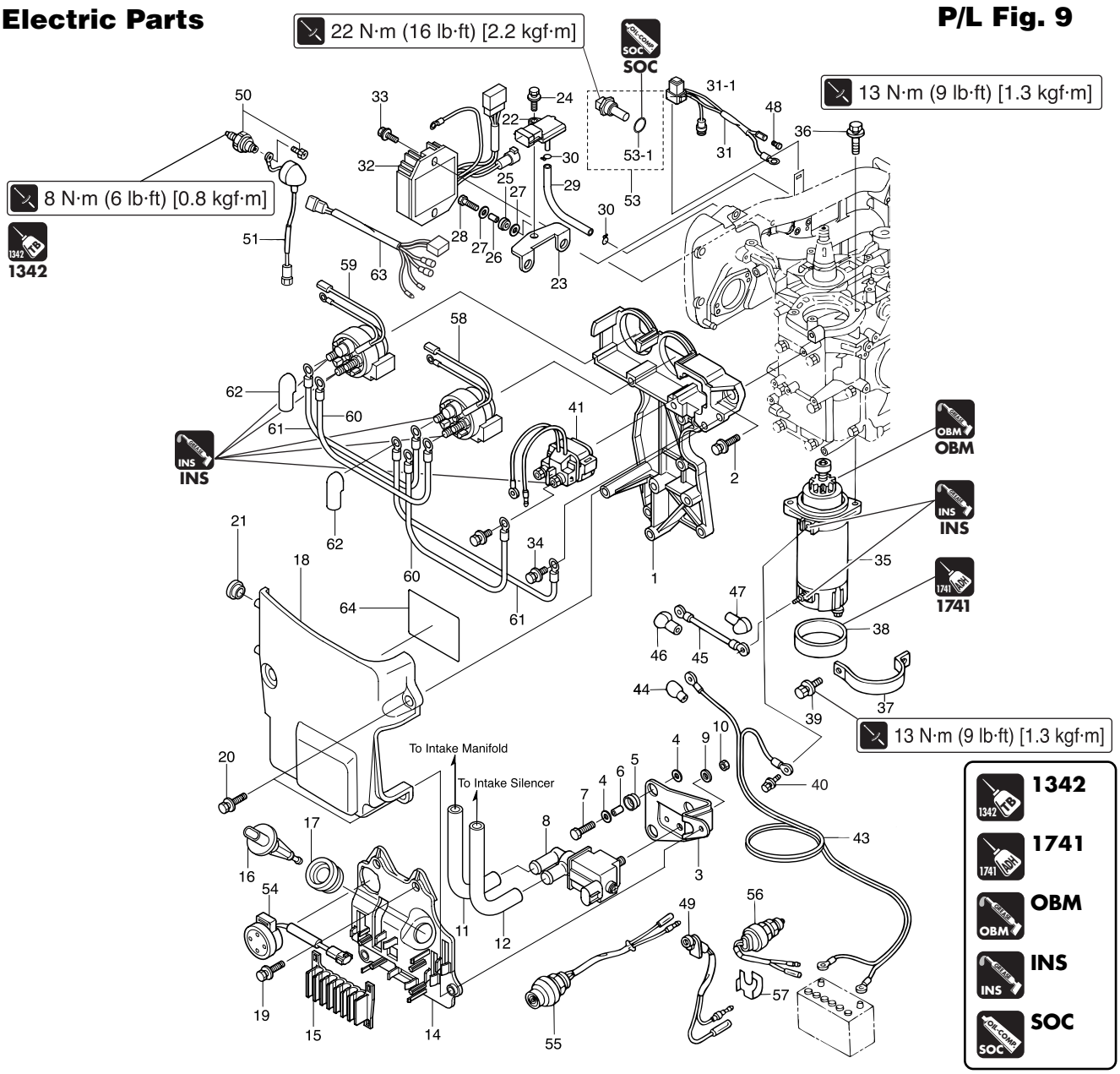

Ref. No.	Description	Q'ty	Remarks
50	Oil Pressure Switch	1	
51	Pressure Switch Lead Cable	1	L=170, with Grommet
53	Water Temperature Sensor	1	
53-1	O Ring, 2-10	1	**Do not reuse.**
54	Over-Heat Buzzer	1	●
55	Main Switch	1	▲
56	Neutral Swtich	1	▲
57	Neutral Switch Actuator	1	▲
58	PTT Solenoid Switch A	1	■ for tilt up
59	PTT Solenoid Switch B	1	■ for tilt down
60	Solenoid Switch cord "B"	2	■ L=150, Red (+)
61	Solenoid Switch cord "B"	2	■ L=130, Black (−)
62	Terminal Cap	2	■
63	PTT Extension Cord	1	■
64	Wiring Diagram Decal	1	

● Tiller Handle Model
▲ Electric Start Model with Tiller Handle
■ PTT Model

Starter Motor

P/L Fig. 10

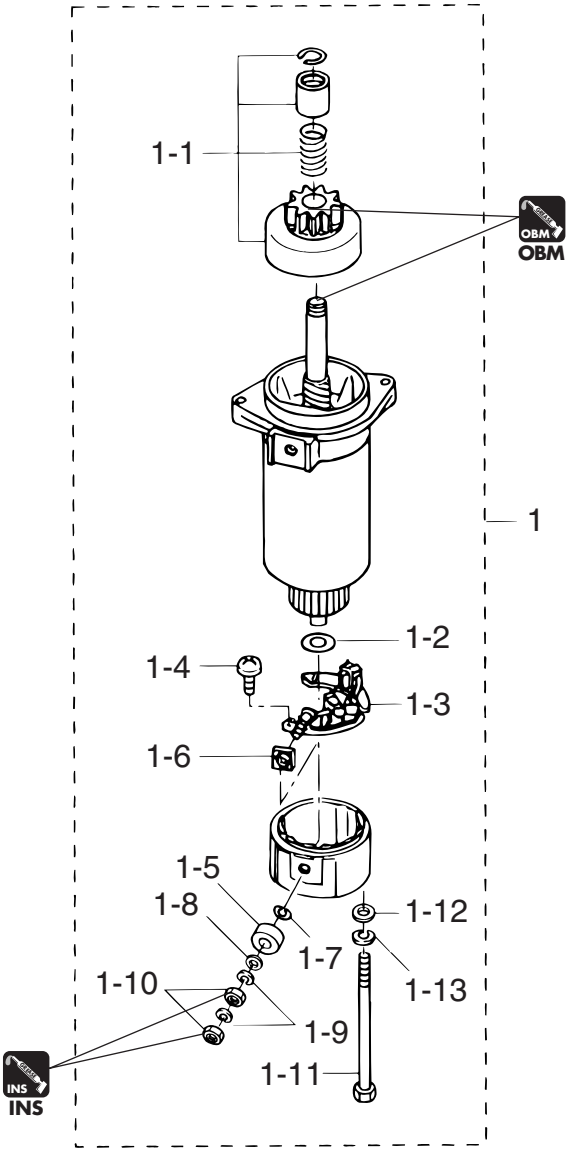

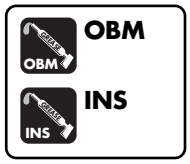

Ref. No.	Part Name	Q'ty	Remarks
1	Starter Motor	1	
1-1	Pinion Ass'y	1	
1-2	Washer	1	
1-3	Brush Holder	1	
1-4	Screw	2	
1-5	Bushing #1	1	
1-6	Bushing #2	1	
1-7	O-Ring	1	
1-8	Washer	1	
1-9	Spring Washer	2	
1-10	Nut	2	
1-11	Bolt	2	
1-12	Washer	2	
1-13	Spring Washer	2	

Fuel Pump, Fuel Rail, Vapor Separator

P/L Fig. 5

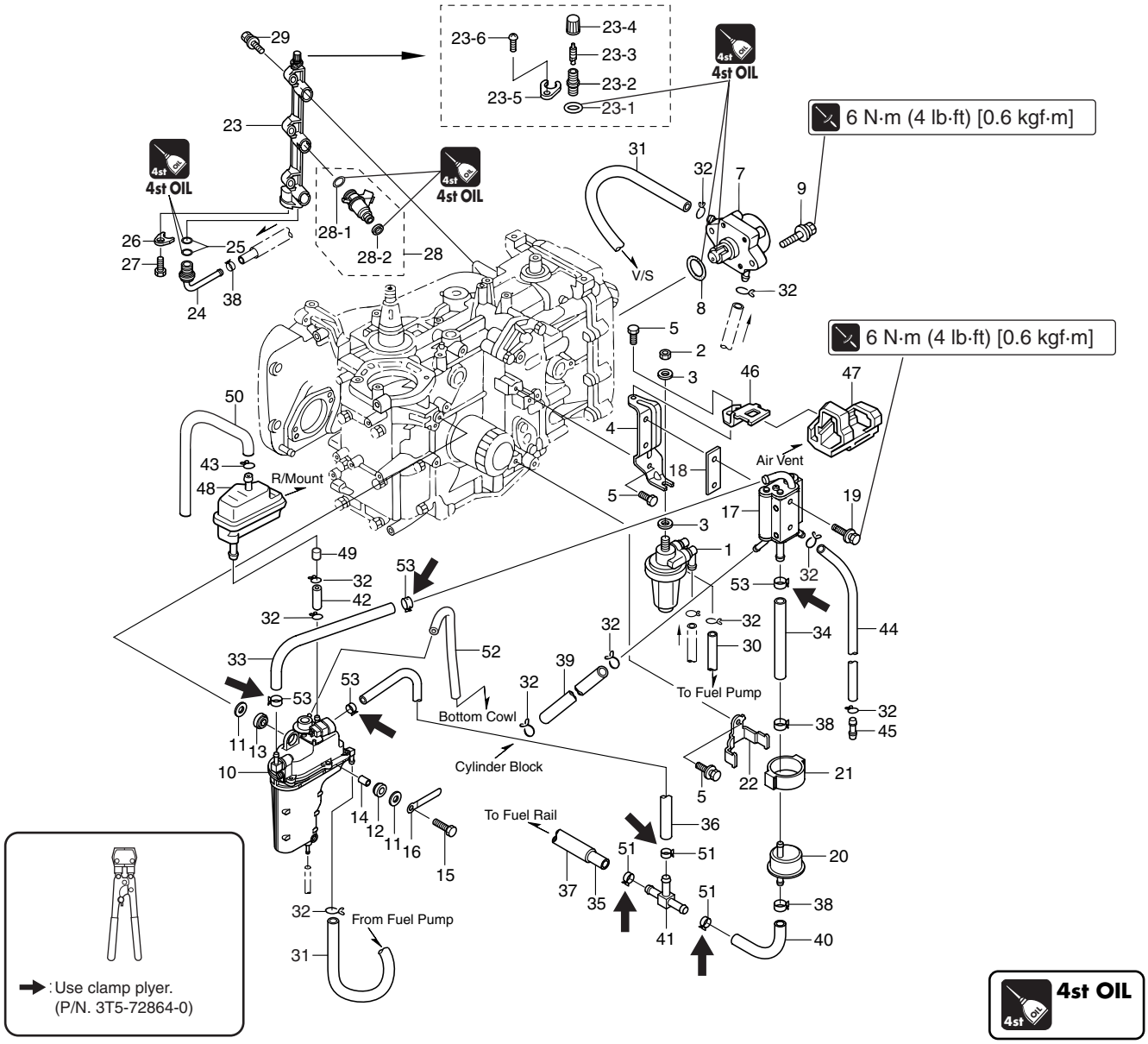

Ref. No.	Description	Q'ty	Remarks
1	Fuel Filter	1	
2	Nut	1	
3	Washer	2	
4	Plate	1	
5	Bolt	3	M6 L=16mm
7	Fuel Pump	1	
8	O Ring, 3.5-25.7	1	Do not reuse.
9	Bolt	2	M6 L=25mm
10	Vapor Separator	1	
11	Washer, 6.5-21-1	6	
12	Rubber Mount, 8.5-14-2.5	3	
13	Rubber Mount, 8.5-14-2.5	3	
14	Spacer, 6.2-9-15.7	3	
15	Bolt	3	M6 L=30mm
16	Clamp, 6.5-87P	1	
17	Fuel Cooler	1	
18	Fuel Cooler Gasket	1	
19	Bolt	2	M6 L=35mm
20	High Pressure Fuel Filter	1	Replace every 200 hours or two years.
21	Fuel Filter Rubber Mount	1	
22	Fuel Filter Band	1	
23	Fuel Rail	1	
23-1	O Ring, 1.9-4.8	1	Do not reuse.
23-2	Joint	1	

Ref. No.	Description	Q'ty	Remarks
23-3	Valve Ass'y	1	
23-4	Cap	1	
23-5	Plate	1	
23-6	Screw	1	M4 L=10mm
24	Nipple	1	
25	O Ring, 1.9-9.8	2	Do not reuse.
26	Holding Plate	1	
27	Bolt	1	M6 L=16mm
28	Fuel Injector	3	
28-1	O Ring, 3.6-6.5	3	Do not reuse.
28-2	O Ring	3	Do not reuse.
29	Bolt	3	M6 L=25mm
30	Rubber Hose, L=370	1	F/Filter to F/Pump
31	Rubber Hose, L=600	1	F/Pump to Vapor Separator
32	Clip, ø10	10	
33	Fuel Hose	1	Vapor Separator to F/Cooler
34	Fuel Hose	1	F/Cooler to High Pressure F/Filter
35	Fuel Hose	1	T Nipple to Fuel Rail
36	Fuel Hose	1	Vapor Separator to T Nipple
37	Hose Protector	1	L=240
38	Clip, ø13.5	3	
39	Rubber Hose	1	Cylinder to F/Cooler
40	Fuel Hose, L=600	1	High Pressure F/Filter to T Nipple
41	T Nipple	1	

Fuel Pump, Fuel Rail, Vapor Separator P/L Fig. 5

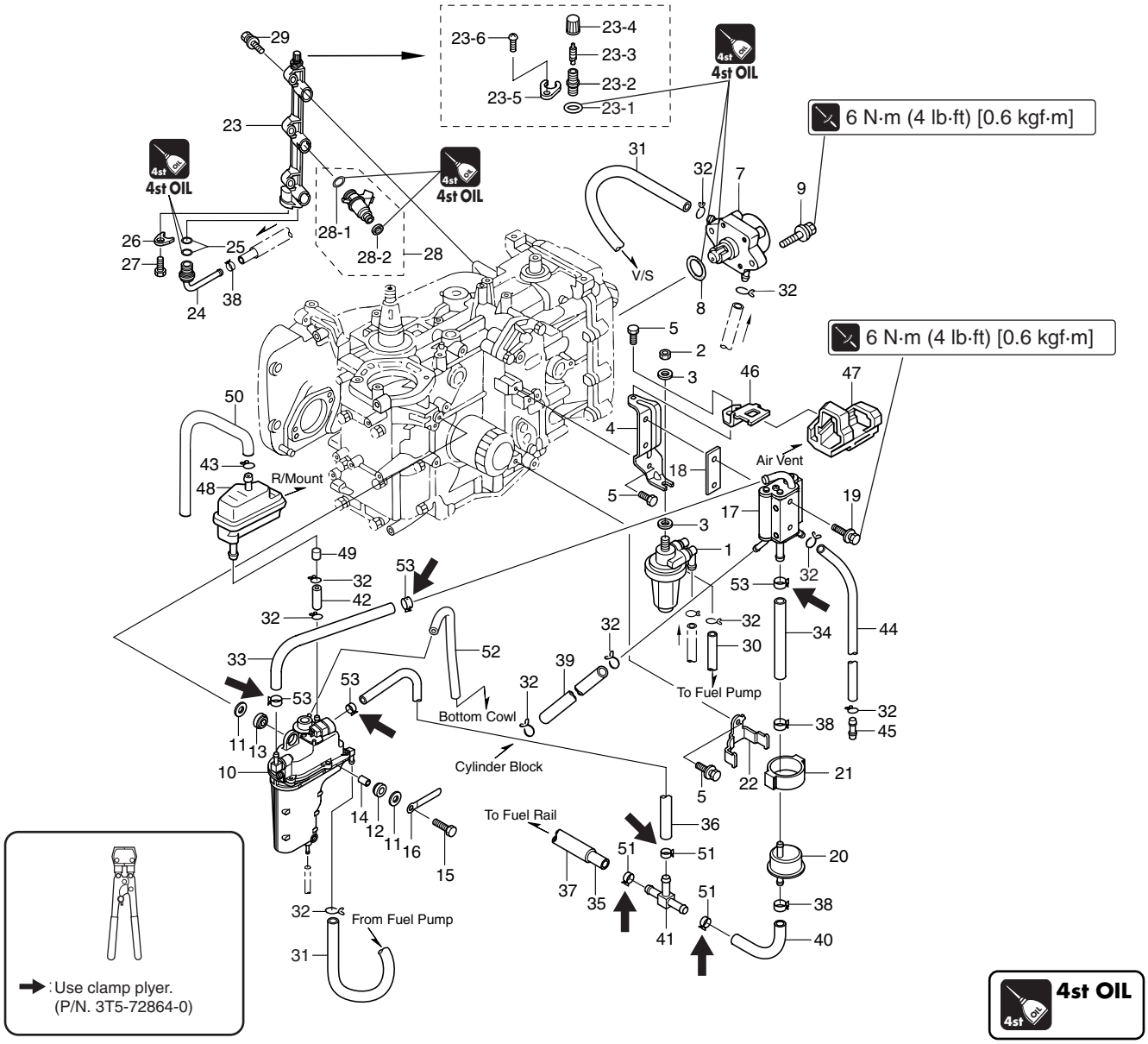

Ref. No.	Description	Q'ty	Remarks
42	Rubber Hose	1	Air Vent to Vapor Separator
43	Clip, ø7	5	
44	Rubber Hose, L=600	1	Fuel Cooler to Water Nipple (Cooling Water Check Port)+
45	Water Nipple	1	Bottom Cowl
46	Air Vent Stay	1	
47	Rubber Mount (Air Vent)	1	
48	Air Vent Ass'y	1	
49	Orifice	1	
50	Rubber Hose	1	Air Vent to Bottom Cowl
51	Clamp	3	
52	Rubber Hose, LL=540	1	Vapor Separator to Bottom Cowl
53	Clamp, 16.8	4	**Do not reuse.**

4. Ignition System, Ignition Control System

1) Inspection of Ignition Sparks

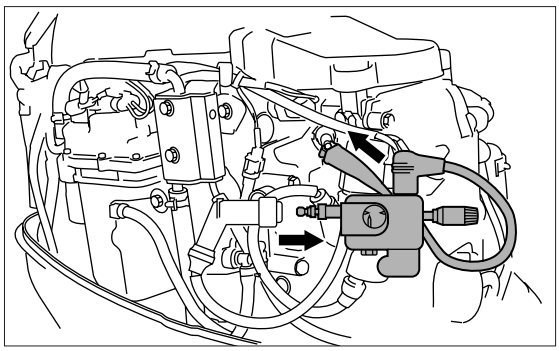

1. Disconnect plug caps from spark plugs.

2. Connect plug cap to spark tester.

3. Connect spark tester clip to spark plug tip electrode.

Spark Tester :
P/N. 3F3-72540-0

Spark Performance :
10 mm (0.4 in) or over

4. Start engine and check sparks. Check spark system when sparks are weak.

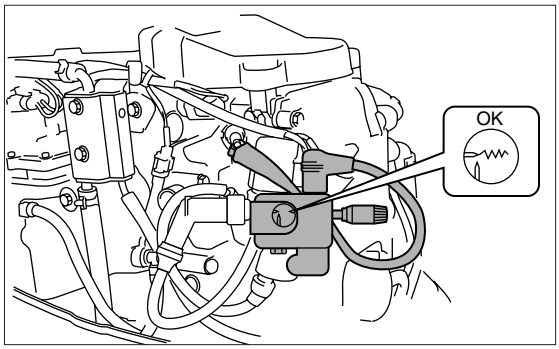

- This test can be made without removing parts.
- Ignition coil operation test can be made by using "Running (Drop) Test" of diagnosis system.

⚠ WARNING

- **When testing, put electrode cap assuredly to prevent direct contact with spark tester wiring and leak of electrical current, and perform test carefully.**
- **Keep inflammable gas, fuel, oil and fat away from tester to prevent them from catching sparks.**

2) Inspection of Plug Cap

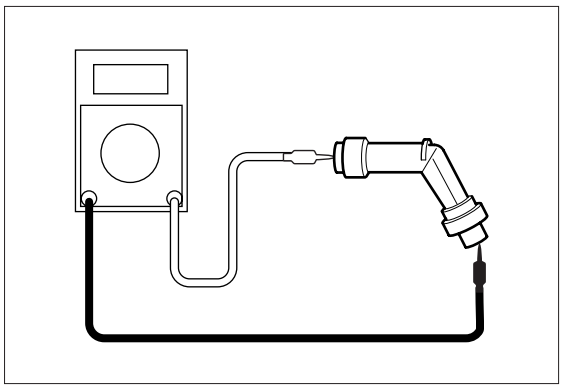

Remove plug cap to test it as a separate unit.

1. Disconnect plug caps from spark plugs.

2. Remove plug caps from their high tension cables.

3. Measure plug cap resistance. Replace if other than specified value.

Plug Cap Resistance :
3.0 to 7.0 kΩ

3) Inspection of Ignition Coils

1. Remove ignition coil coupler.

2. Measure ignition coil resistance. Replace if other than specified value.

This test can be made without removing parts.

Ignition Coil Resistance :
Primary Coil : Between Black/White (B/W) - Black (B)
0.17 to 0.23 Ω (at 20°C)
Secondary Coil : Between High Tension Cord - Black (B)
3.3 to 4.9 Ω (at 20°C)
Secondary Coil : Between Plug Cap - Black (B)
7.1 to 11.1 Ω (at 20°C)

3. Install plug cap onto high tension cord by entwisting clockwise.

4. Connect plug cap to spark plug.

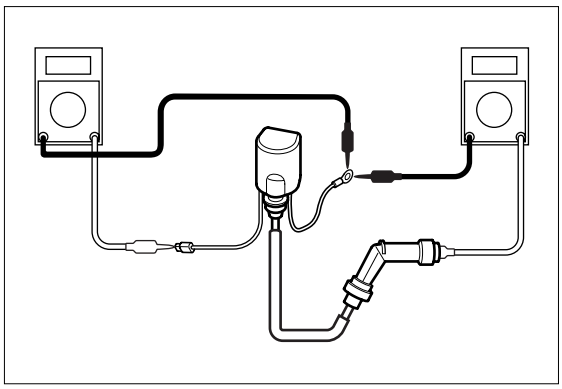

4) Inspection of Alternator

1. Disconnect alternator coupler (6 pin).

2. Measure alternator resistance. Replace if other than specified value.

This test can be made without removing parts.

Alternator (Exciter Coil) Resistance :
Between White/Red (W/R) - White/Black (W/B) : 11 to 16 Ω
Between White/Blue (W/L) - White/Black (W/B) : 11 to 16 Ω

Alternator (ECU Charge Coil) Resistance :
Between White (W) - White (W) : 1.1 to 1.7 Ω
(Three Types)

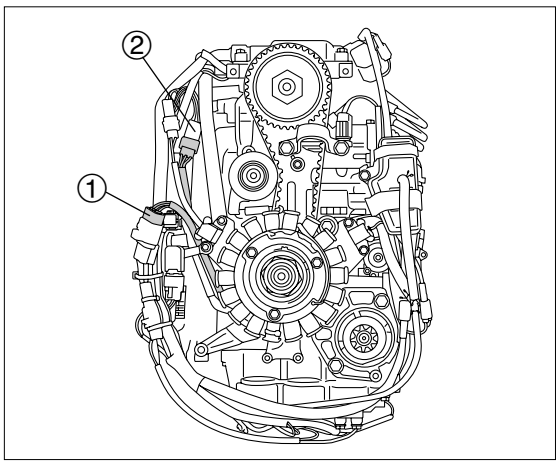

① Alternator (3 Pin) (Charge Coil)
② Alternator (6 Pin) (Exciter Coil, ECU Charge Coil)

8

5) Inspection of Pulser Coil

1. Disconnect starboard side #1 pulser coil coupler ① (2 pin).

2. Measure #1 pulser coil resistance. Replace if other than specified value.

3. Disconnect port side #2 pulser coil coupler ② (1 pin), and check #2 pulser coil like #1 coil.

This test can be made without removing parts.

Pulser Coil Resistance (Reference Value) : (#1, #2)
Between Red/White (R/W) - Black (B)
Between Red/Yellow (R/Y) - Black (B) : 148 to 222 Ω

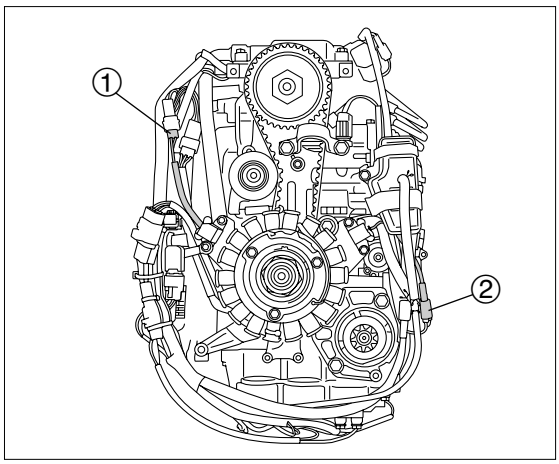

① #1 Pulser Coil (2 Pin)
② #2 Pulser Coil (1 Pin)

6) Inspection of Oil Pressure Switch

Remove oil pressure switch to test it as a separate unit.

1. Remove vapor separator bolt, move vapor separator to the left, and remove oil pressure switch.

2. Check electrical conductivity of oil pressure switch. Replace if no conductivity.

3. Connect vacuum/pressure gauge to oil pressure switch.

Vacuum/Pressure Gauge :
P/N. 3AC-99020-0

4. Apply pressure slowly with vacuum/pressure gauge.

5. Check that oil pressure switch is not conductive with specified pressure applied. Replace if conductive.

Specified Pressure :
0.020 to 0.029 MPa (2.8 to 4.0 PSi)
[0.2 to 0.3 kgf/cm^2]

6. Reinstall the component removed.

Oil Pressure Switch :
8 N·m (6 lb·ft) [0.8 kgf·m]

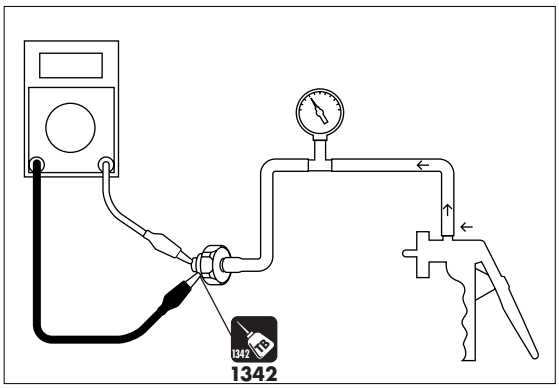

7) Inspection of Water Temperature Sensor

Remove water temperature sensor to test it as a separate unit.

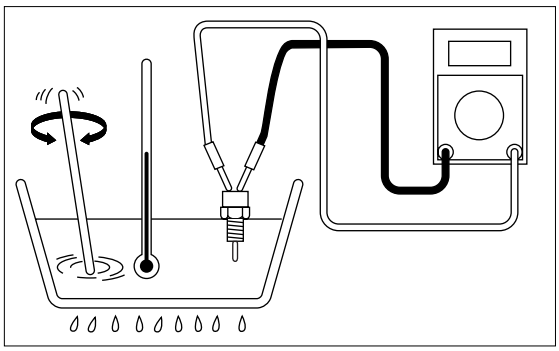

1. Remove water temperature sensor from engine.
2. Put water temperature sensor in the water, and warm up water slowly.
3. Measure water temperature sensor resistance. Replace if the resistance is out of specified range.

Water Temperature Sensor Resistance (Reference Value) :
Between Black/Yellow (B/Y) - Black (B)
2.4 to 2.9 Ω (at 20°C)
0.29 to 0.32 Ω (at 80°C)

8) Inspection of Neutral Switch (Tiller Handle Model)

This test can be made without removing parts.

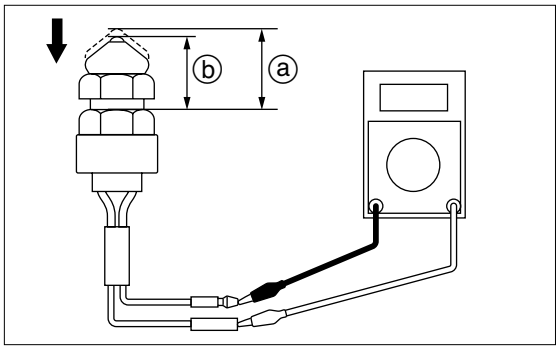

1. Check electrical conductivity of neutral switch. Replace if no conductivity.

Switch Position	Lead Wire Color	
	Green (G)	Green (G)
Free ⓐ		
Pushed ⓑ	○	○

9) Inspection of Start Switch (Tiller Handle Model)

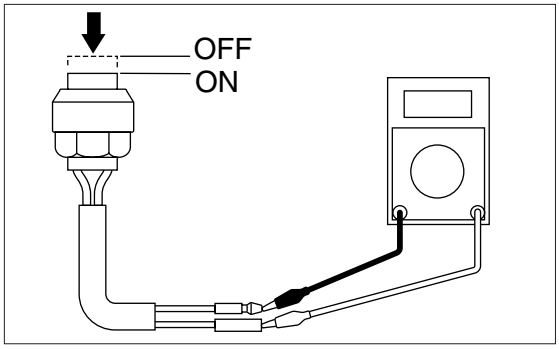

1. Check electrical conductivity of start switch. Replace if no conductivity.

This test can be made without removing parts.

Switch Position	Lead Wire Color	
	Green (G)	Red (R)
Free : OFF		
Pushed : ON	○	○

10) Inspection of Stop Switch

1. Check electrical conductivity of stop switch. Replace if no conductivity.

This test can be made without removing parts.

Switch Position	Lead Wire Color	
	Brown (Br)	Black (B)
Remove lock. ⓐ	○	○
Install lock. ⓑ		
Press switch. ⓒ	○	○

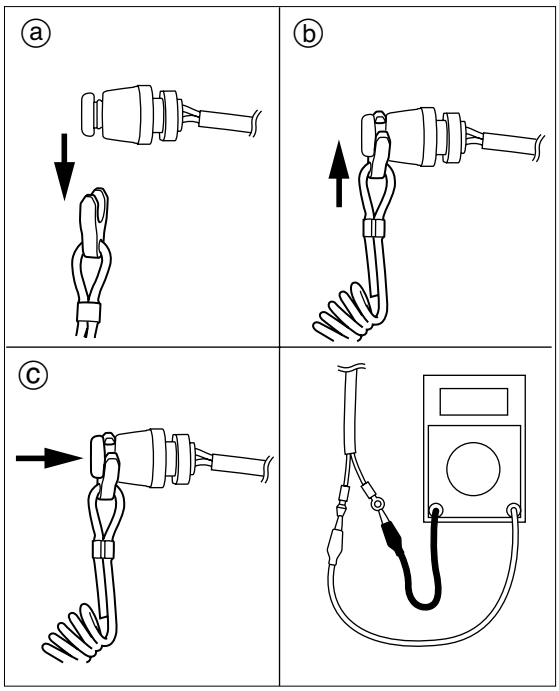

5. Fuel Control System

1) Inspection of Injectors

1. Measure injector resistance.

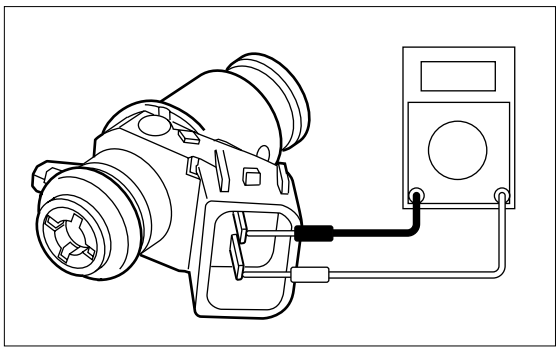

- This test can be made without removing parts.
- Injector operation test can be made by using "Function, or Running (Drop) Stop Test" of diagnosis system.

Injector Resistance (Reference Value) : (at 20°C)
11.1 to 12.3 Ω

2) Inspection of ISC Valve

1. Connect vacuum/pressure gauge to ISC valve.

2. Apply specified vacuum pressure to ISC valve.

Vacuum/Pressure Gauge :
P/N. 3AC-99020-0

Specified Vacuum Pressure :
0.069 MPa (10psi) [0.7kgf/cm^2]

3. Check, when battery voltage is applied to ISC valve terminal ①, that valve opens and vacuum pressure is released.

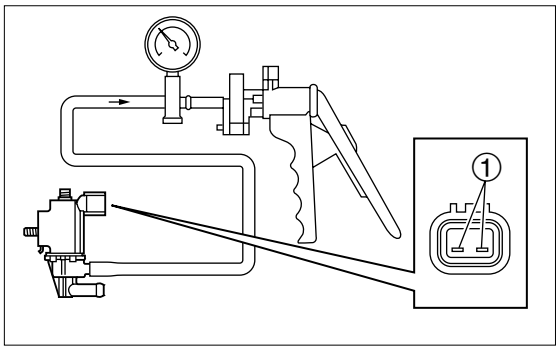

This test can be made without removing parts.

4. Measure ISC valve resistance.

ISC Valve Resistance (Reference Value) : (at 20°C)
24.0 to 30.0 Ω

ISC valve operation test can be made by using "Function Test" of diagnosis system.

8

3) Inspection of MAT (Manifold Temperature) Sensor

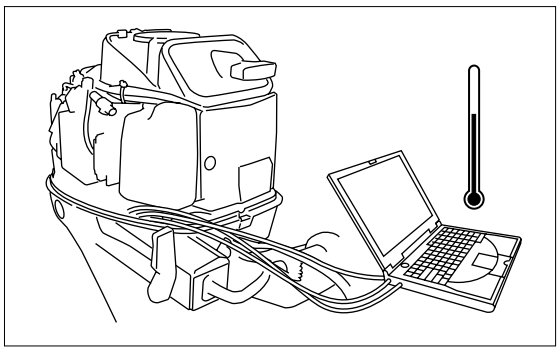

1. Measure ambient temperature.

2. Connect computer to outboard motor, and use diagnosis system to display "Air Temperature (Intake Air Temperature)".

3. Replace MAT sensor if difference between ambient temperature and "Air Temperature (Intake Air Temperature)" is over ± 5°C.

Perform inspection MAT sensor when engine is cold.

4. Measure MAT sensor resistance. Replace if the resistance is out of specified range.

This test can be made without removing parts.

MAT (Intake Air Temperature)
Sensor Resistance (Reference Value) :
2.35 to 2.55 Ω (at 20°C)
0.30 to 0.35 Ω (at 80°C)

4) Inspection of Fuel Feed Pump (FFP).

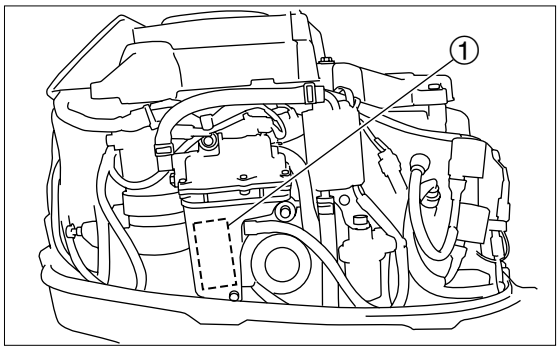

1. Use "Function Test or Air Purging" of diagnosis system to inspect fuel feed pump (FFP) operation.

2. Check that fuel feed pump (FFP) ① operation sound is heard. If not, check fuel system.

- This test can be made without removing parts.
- Fuel feed pump (FFP) operates two seconds after performing "Air Purging".

5) Inspection of Throttle Position Sensor

1. Check throttle position sensor resistance. Replace throttle body with throttle position sensor if other than specified value.

Throttle Position Sensor Resistance :

Throttle Position	Fully Closed	Fully Open
Blue - Black	4.0 to 6.0kΩ	
Yellow - Black	0.4 to 1.0kΩ	3.2 to 3.8kΩ
Yellow - Blue	3.8 to 4.6kΩ	1.2 to 1.6kΩ

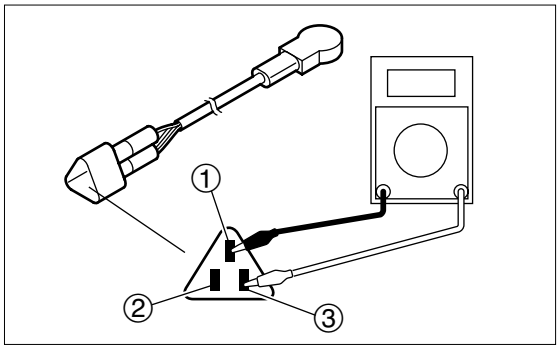

① B (Black)
② Y (Yellow)
③ L (Blue)

6.Starting System

1) Inspection of Fuse

1. Check electrical conductivity of fuse. Replace if no conductivity.

> Flat or small sized plate fuse (20A) is adopted.

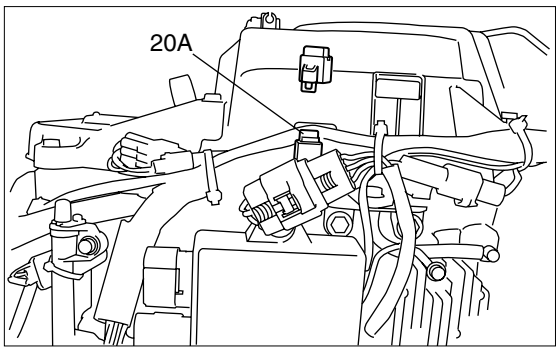

2) Inspection of Starter Solenoid

1. Connect tester lead wires to both terminal of starter solenoid.
2. Connector green (G) lead wire to battery positive terminal.
3. Connector black (B) lead wire to battery negative terminal.
4. Check electrical conductivity between terminals of starter solenoid. Replace if no conductivity.
5. Remove battery terminal from green (G) or black (B) lead wire, and check there is no conductivity between starter solenoid terminals. Replace if conductive.

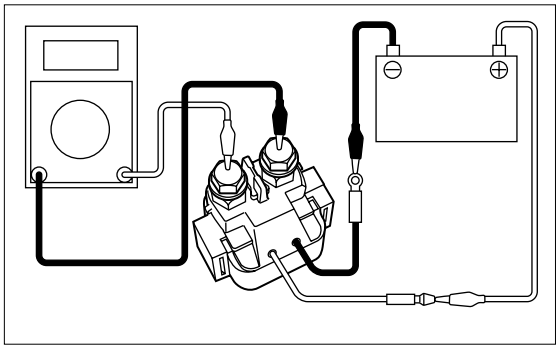

3) Disassembly of Starter Motor

1. Put locating mark between starter motor body and cap. (This mark facilitates reassembly.)
2. Slide pinion stopper ① downward as shown and remove slip ②.

> Use small bladed screw driver to remove clutch. Be careful not to cut hand because clip is secured firmly.

3. Remove bolt and disassemble starter motor.

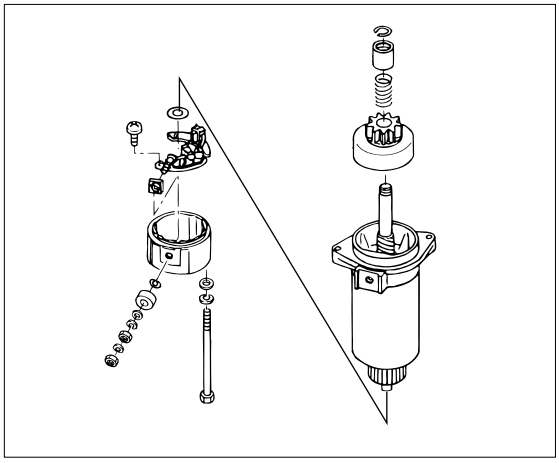

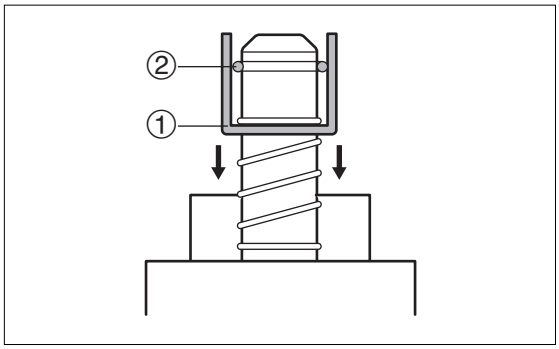

4) Inspection of Starter Motor Pinion

1. Check pinion teeth for crack and wear. Replace if necessary.

2. Fix clutch ②, and turn only pinion ① to check that it can be rotated smoothly in one direction. Replace if necessary.

> Turn pinion ① counterclockwise to check that it can be rotated smoothly. Also, check that pinion is locked when turned clockwise.

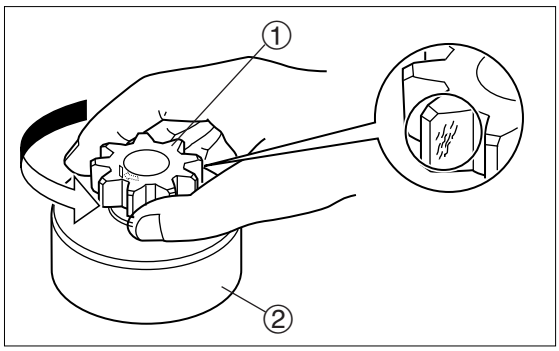

5) Inspection of Armature

1. Check commutator ① for dirt. If necessary, clean by using sand paper of No. 600 or by air-blowing.

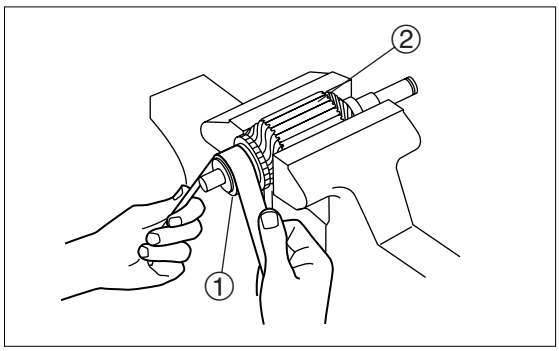

2. Measure commutator ① outer diameter. Replace starter motor ass'y if outer diameter is less than specified value.

Commutator Outer Diameter : Standard Value	30.0 mm (1.181 in)
Wear Limit :	29.50 mm (1.142 in)

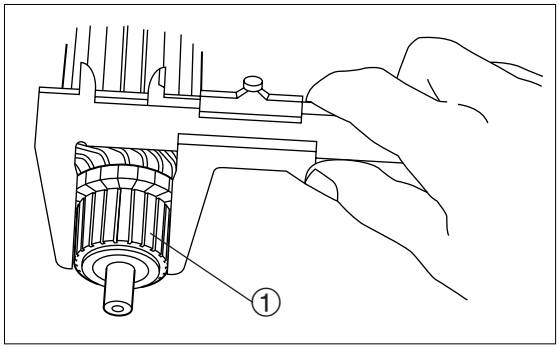

3. Measure undercut ⓐ of commutator ①. Replace starter motor ass'y if less than specified value.

Commutator Undercut : Standard Value	0.5 to 0.8 mm (0.020 to 0.031 in)
Wear Limit ⓐ :	0.2 mm (0.008 in)

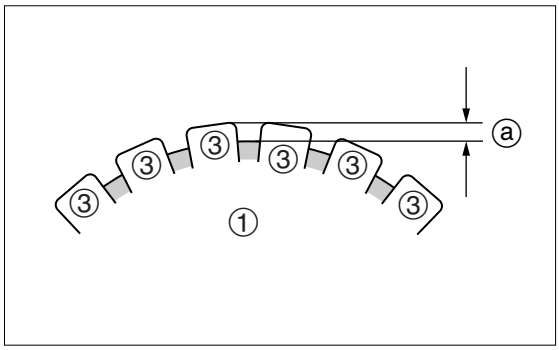

4. Check electrical conductivity of armature ②. Replace starter motor ass'y if other than specified condition.

Armature Conductivity :	
ⓑ Between Commutator Segments ③ - ③	Conductive
ⓒ Between Segment - Armature Core	Non-conductive
ⓓ Between Segment - Armature Shaft	Non-conductive

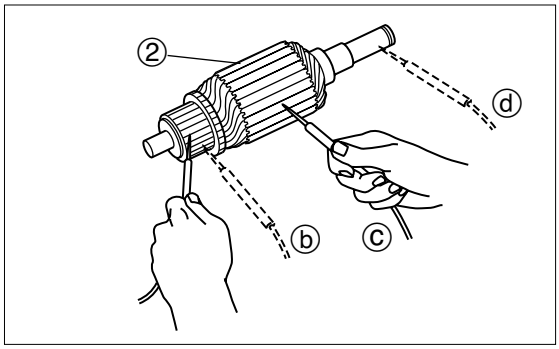

6) Inspection of Brushes

1. Measure brush length. Replace brush holder ass'y if brush length is less than specified value.

Brush Length ⓐ : Standard Value 12.5 mm (0.492 in)	
Wear Limit ⓐ : 9.5 mm (0.374 in)	

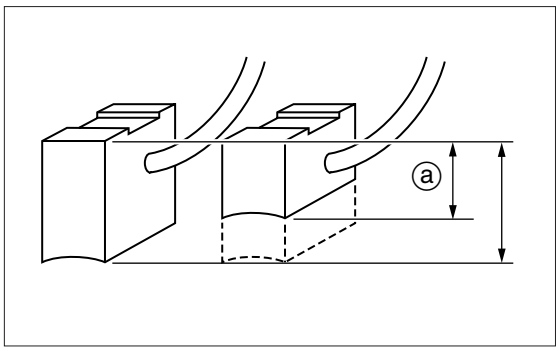

2. Check conductivity of brush holder ass'y. Replace if other than specified value.

Conductivity Between Brushed	
Between Brush ① – Brush ②	Non-conductive
Between Brush ① – Earth	Non-conductive
Between Brush ② – Earth	Conductive

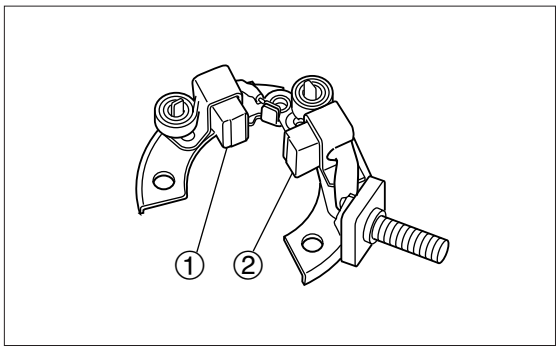

7) Inspection of Starter Motor Operation

1. Assemble starter motor, and check, before and after installing it on the power unit, by applying voltage between points "+" and "–" that it operates normally.

Energizing starter motor produces sparks, and thus, any inflammable matter must be kept away from the motor.

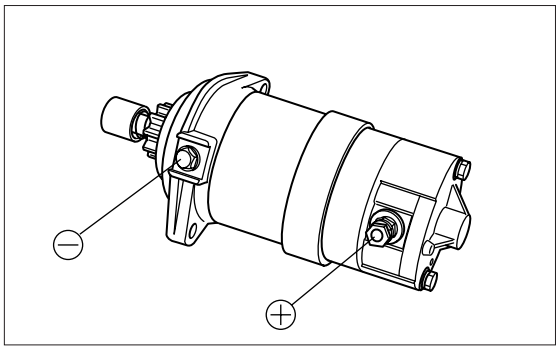

8

7.Battery Charging System

1) Inspection of Alternator

1. Disconnect alternator coupler (3 pin).

2. Measure alternator resistance. Replace if other than specified value.

This test can be made without removing parts.

Alternator (Charge Coil) Resistance : Reference Value (at 20°C)
Between Yellow (Y) and Yellow (Y) (three types)
0.29 to 0.43 Ω

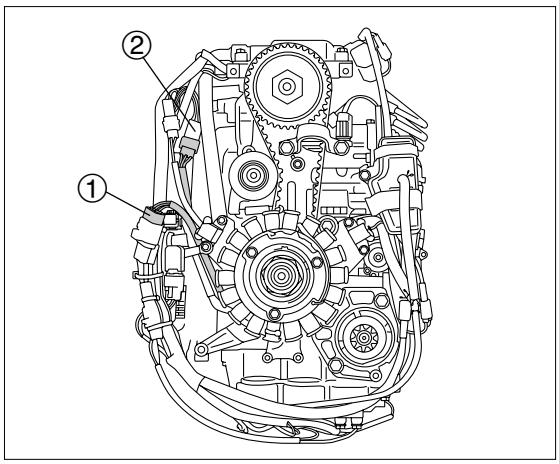

① Alternator (3 Pin) (Charge Coil)
② Alternator (6 Pin) (Exciter Coil, ECU/Charge Coil)

2) Inspection of Rectifier

- Check wire harness for disconnection of lead wire and defective connection.
- Check conductivity between each point by referring to the following table. Value in ( ) is reference value.
- Perform the measurement with all connections disconnected to make the component a separated unit.

This test can be made without removing parts.

Rectifier Tester Check Chart "ON" means "conductive", and "OFF" means "non-conductive".

	Tester Lead Positive (+) Side (Red)					
Tester Lead Negative (+) Side (Black)		Red	Yellow	Black	Yellow	Yellow
	Red		OFF CON (∞)	OFF (∞)	OFF CON (∞)	OFF CON (∞)
	Yellow	ON (5kΩ) ※		ON (2.5kΩ)	ON (5kΩ)	ON (5kΩ)
	Black	ON (6kΩ) ※	ON (2.5kΩ)		ON (2.5kΩ)	ON (2.5kΩ)
	Yellow	ON (5kΩ) ※	ON (5kΩ)	ON (2.5kΩ)		ON (5kΩ)
	Yellow	ON (5kΩ) ※	ON (5kΩ)	ON (2.5kΩ)	ON (5kΩ)	

- Measurement Conditions : Type of Circuit Tester : HIOKI3030
- Measurement Range : 1kΩ
- Permissible Error of Resistance : ±20%
- ※: The resistance values may vary widely among circuit testers because of their error characteristics.

Note : ① It is recommended to use "HIOKI HiTESTER MODEL 3030" for this measurement. Use of other instrument model for the measurement can cause indication of abnormal value for normal condition, resulting in inaccurate measurement.
② Disconnect all connections, and measure as an independent unit.
③ Any movement of pointer indicates "ON" or "conductive" state.
④ "CON" means that the pointer moves once and then returned to the value shown in ( ) because of characteristic of capacitor.
⑤ The value in ( ) is the condition applied when "1kΩ" range is used. The measurement varies widely among types of instrument, situations (such as inner power supply), or measurement ranges due to diodes used in the unit.

8.ECU Coupler

- Check wire harness for disconnection of lead wire and defective connection.

- Terminals are arranged and numbered as shown.

- The following table names of terminals, their numbers and lead wire colors.

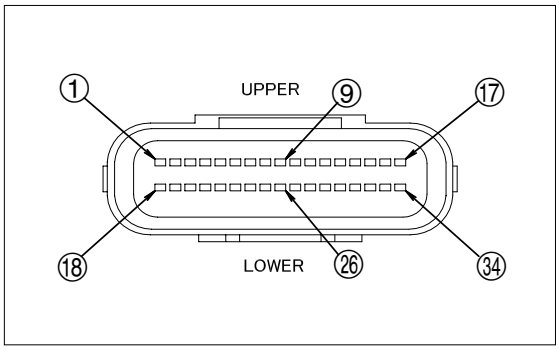

① ② ③ ④ ⑤ ⑥ ⑦ ⑧ ⑨ ⑩ ⑪ ⑫ ⑬ ⑭ ⑮ ⑯ ⑰

⑱ ⑲ ⑳ ㉑ ㉒ ㉓ ㉔ ㉕ ㉖ ㉗ ㉘ ㉙ ㉚ ㉛ ㉜ ㉝ ㉞

Name	Terminal	Leas Wire (Color)	
Power Supply (INJ/FFP/ISC/Lamp)	A1	L	Blue
Exciter Coils	A2	W/R	White/Red
Stop Watch	A3	Br	Brown
Vacant	A4	PLUG	
Oil Pressure Switch	A5	Br/W	Brown/White
Vacant	A6	PLUG	
TPS	A7	L/W	Blue/White
Water Temperature Sensor	A8	G/Y	Green/Yellow
Warning Lamp (Tachometer)	A9	Lg	Yellowish Green
Warning Lamp (LED)	A10	Lg	Yellowish Green
Warning Buzzer	A11	Y	Yellow
Tachometer	A12	W	White
Map Sensor (MAP)	A13	G/L	Green/Blue
Mat Sensor (MAT)	A14	G/W	Green/White
#1 Pulser Coil (–)	A15	B	Black
ISC Valve	A16	G/R	Green/Red
Power Supply (TPS/MAP sensor)	A17	R/L	Red/Blue
ECU/Charge Coil	A18	W	White
ECU/Charge Coil	A19	W	White
ECU/Charge Coil	A20	W	White
Vacant	A21	PLUG	
Fuel Feed Pump (FFP)	A22	L/B	Blue/Black
Exciter Coils	A23	W/B	White/Black
Exciter Coils	A24	W/L	White/Blue/
#1 Ignition Coil	A25	B/W	Black/White
#2 Ignition Coil	A26	B/Y	Black/Yellow
#3 Ignition Coil	A27	B/G	Black/Green
Earth (Ground/Stop)	A28	B	Black
#1 Fuel Injector	A29	Lg/R	Yellowish Green/Red
#2 Fuel Injector	A30	Lg/B	Yellowish Green/Black
#3 Fuel Injector	A31	Lg/L	Yellowish Green/Blue
#1 Pulser Coil (+)	A32	R/W	Red/White
#2 Pulser Coil (+)	A33	R/Y	Red/Yellow
Earth (Sensor)	A34	B/L	Black/Blue

9

Troubleshooting

1 Troubleshooting List ····· 9-2
2 Power Unit ····· 9-3
State 1 : Engine will not start or is a little hard to start. ··· 9-3
Starting System ····· 9-3
Ignition System ····· 9-5
Fuel System ····· 9-7
State 2 : Full throttle engine revolution speed is low.
Engine revolution speed fall off.Engine stalls ··· 9-9
Ignition System ····· 9-10
Fuel System ····· 9-11
Lubrication System ····· 9-12
Cooling System ····· 9-13
State 3 : Engine rotation is unstable or hunting occurs
in low speed range.····· 9-14
Ignition System ····· 9-15
Fuel System ····· 9-16
3 PTT Unit····· 9-17
State 1 : PTT will not operate. ····· 9-17
State 2 : PTT is not capable of sustaining outboard motor.··· 9-18
4 3AC Diagnosis ····· 9-19
1.Set Up ····· 9-19
1) Software Install ····· 9-20
2) If putting CD into CD drive will not cause
installation software to start. ····· 9-21
3) Diagnosis File Information ····· 9-21
2.Hardware Connection ····· 9-22
1) Preparation ····· 9-22
3.Position of ON/OFF switch for function
Test and Running (Drop) test ····· 9-23
4.Operating Procedure ····· 9-24
1) Start Up ····· 9-24
2) Menu Selection ····· 9-24
3) Preface and Introducion ····· 9-24
4) Setting Communication (COM) Port ··· 9-25
5) Monitoring ECU data ····· 9-26
6) Monitoring History and failure code retrieval··· 9-27
7) Function Test····· 9-28
8) Running Test (Drop Test) ····· 9-29
9) Air Purging from high pressure fuel circuit ··· 9-30
10) Explanation of Error Codes ····· 9-31
11) Exit Diagnostic ····· 9-31

1.Troubleshooting List

* Low speed ESG operates.

	Engine will not start.	Engine stalls immediately after starting.	Defective idling	Defective acceleration	Engine speed is very high causing high speed ESG to operate.	Engine speed is very low, causing low speed ESG to operate.	Boat cannot run at high speed.	Engine overheats.	Battery is not charged.	Starter motor will not operate.	Power tilt will not operate.	Warning lamp is lit.	Warning lamp blinks.	Probable Cause
Fuel and Lubrication Systems	o	o												Fuel level is low in the tank.
	o	o	o	o		o	o	o						Fuel system connection is incomplete.
	o	o	o	o		o	o	o						Fuel system sucks air.
	o	o	o	o		o	o	o						Fuel pipe is twisted.
	o	o	o	o		o	o	o						Cap vent is closed.
	o	o	o	o		o	o	o						Fuel filter, fuel pump or injector is clogged.
	o		o	o			o	o						Low quality gasoline is used.
	o													Primer bulb is clogged.
	o	o	o	o		o	o	o						Fuel feed pump (FFP) malfunctions or is clogged.
						o*							o*	Water temperature sensor or MAP (Manifold Pressure) sensor is defective or the sensor circuit is disconnected.
			o	o		o	o	o						Low quality engine oil is used.
			o	o										Engine oil quantity excessive (Exhaust smoke is generated.)
						o*		o				o*		Engine oil is lacking (Oil pressure switch operates).
						o*		o				o*		Oil filter is clogged (Oil pressure switch operates).
						o*		o				o*		Oil pump is defective (Oil pressure switch operates).
Electrical System	o	o	o	o		o	o	o						Use of spark plugs not specified.
	o	o	o	o		o	o							Spark plug is contaminated.
	o	o	o	o		o	o							No sparks or weak spark.
	o													Stop switch short-circuited.
	o													Stop switch lock is not put.
	o								o	o	o			Defective wiring, earth, wire disconnected or loosened.
	o								o	o	o			Battery charging is defective, or rectifier malfunctions.
	Cell(o)								o	o	o			Battery is dead, connection is loose or corroded. Battery electrolyte level is low.
	o								o	o	o			20A fuse is blown.
	o									o				Shift lever neutral (N) position is not proper.
	o									o	o			Start switch or main switch is defective.
	o									o				Starter motor or starter solenoid operation is defective.
											o			PTT switch or solenoid is defective.
											o			Air is mixed in PTT fluid.
Compression System	o	o	o	o			o							Valve timing is not correct (Belt is stretched or installed incorrectly).
	o	o	o	o			o							Valve clearance is defective.
	o	o	o	o			o							Valve seat sealing is defective.
	o	o	o	o			o							Piston, piston ring and/or cylinder is worn excessively.
			o					o						Combustion chamber car deposition is too much.
			o	o			o	o						Spark plug is loose.
Others			o			o*	o	o				o*		(Cooling water is lacking.) Pump is defective or clogged.
						o*	o	o				o*		Thermostat operation is defective.
				o	o		o	o				o		Anti-cavitation plate is damaged.
				o	o	o	o	o				o		Use of mismatched propeller.
			o	o	o	o	o	o				o		Propeller is damaged or deformed.
				o	o		o	o				o		Thrust rod position is not correct.
				o	o	o	o	o				o		Boat is unbalanced by load position.
				o	o	o	o	o				o		Transom installation height is too high or too low.
				o		o	o							Throttle link adjustment is defective.

Before working on the engine, check that full, rigging and engine installation are normal, and then battery is fully charged. For mechanical troubleshooting, refer to relevant troubleshooting section in this chapter. For checking and servicing outboard motor, refer to service procedures described in this manual to perform the works safely.

2.Power Unit

State 1 **Engine will not start or is a little hard to start.**

Starting System

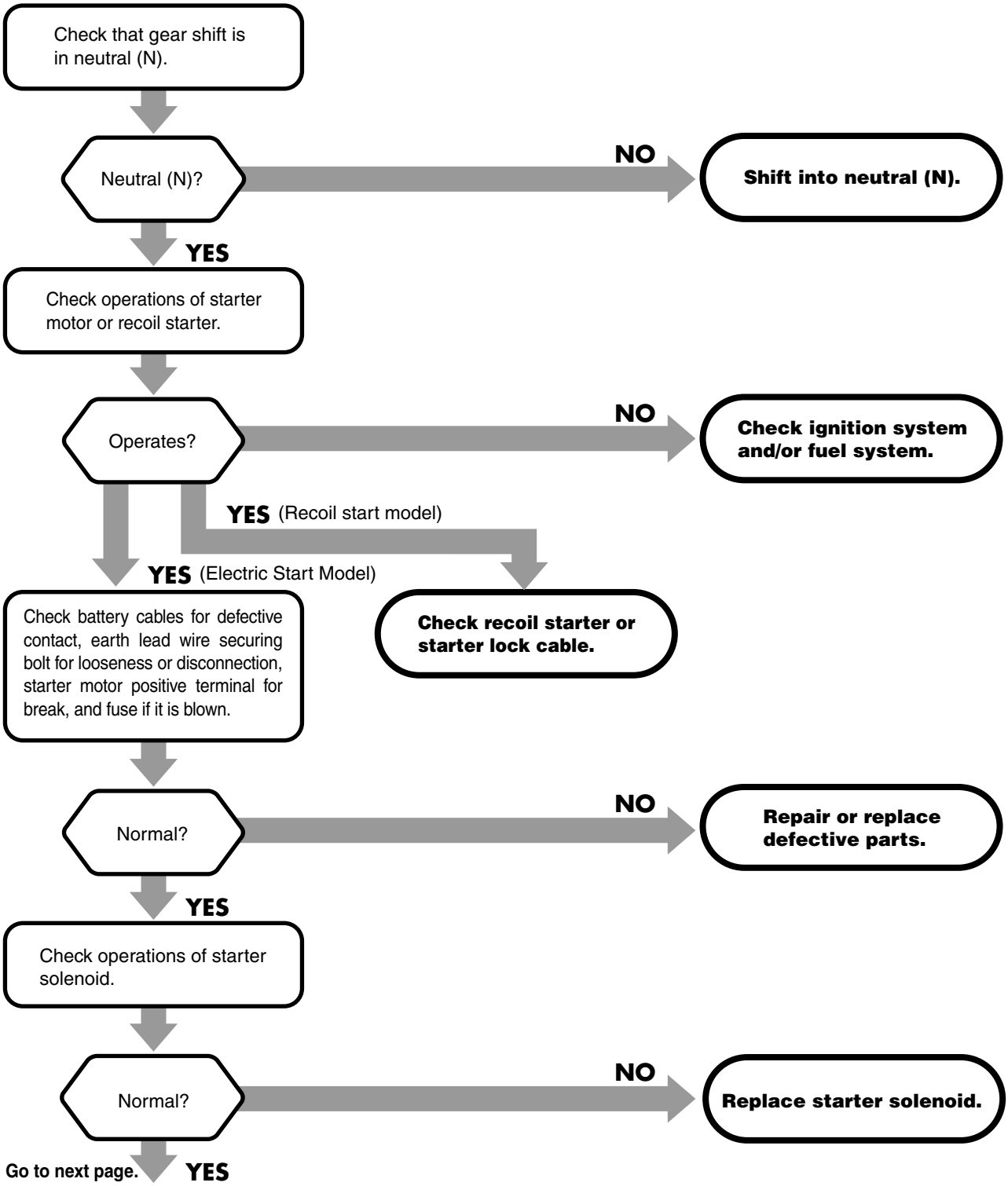

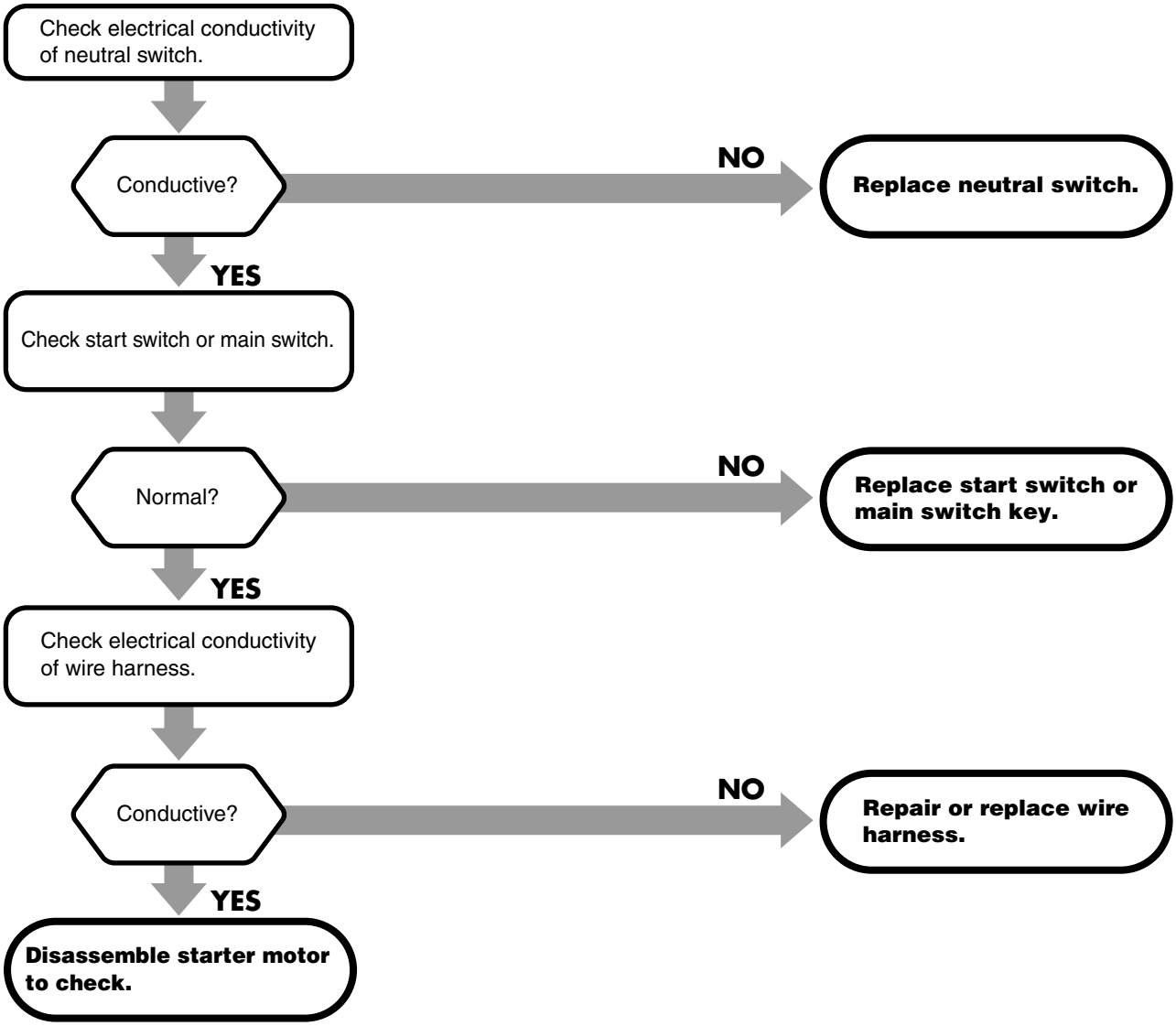
Check electrical conductivity of neutral switch.
Conductive?
NO
Replace neutral switch.
YES
Check start switch or main switch.
Normal?
NO
Replace start switch or main switch key.
YES
Check electrical conductivity of wire harness.
Conductive?
NO
Repair or replace wire harness.
YES
Disassemble starter motor to check.

Ignition System

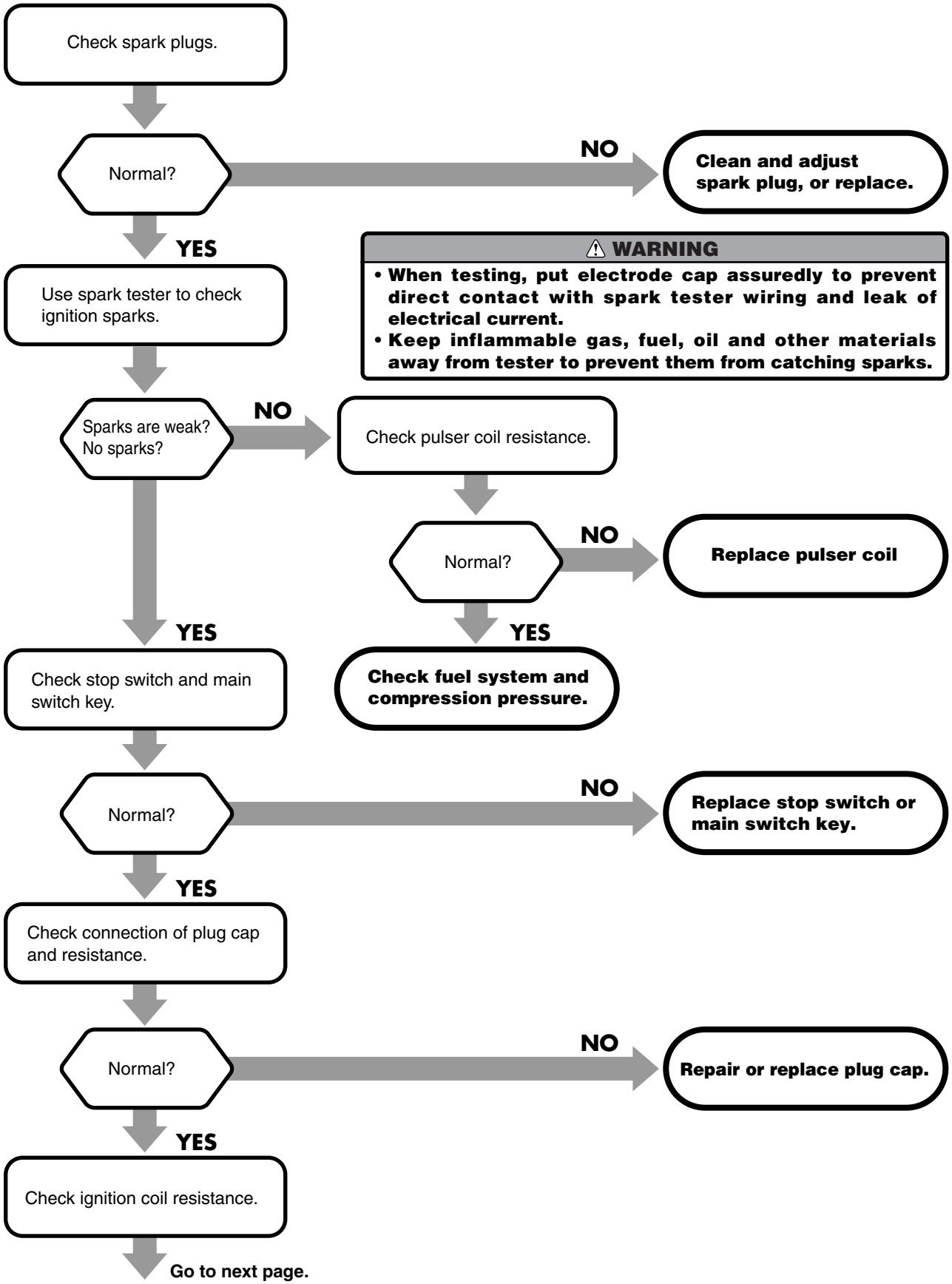

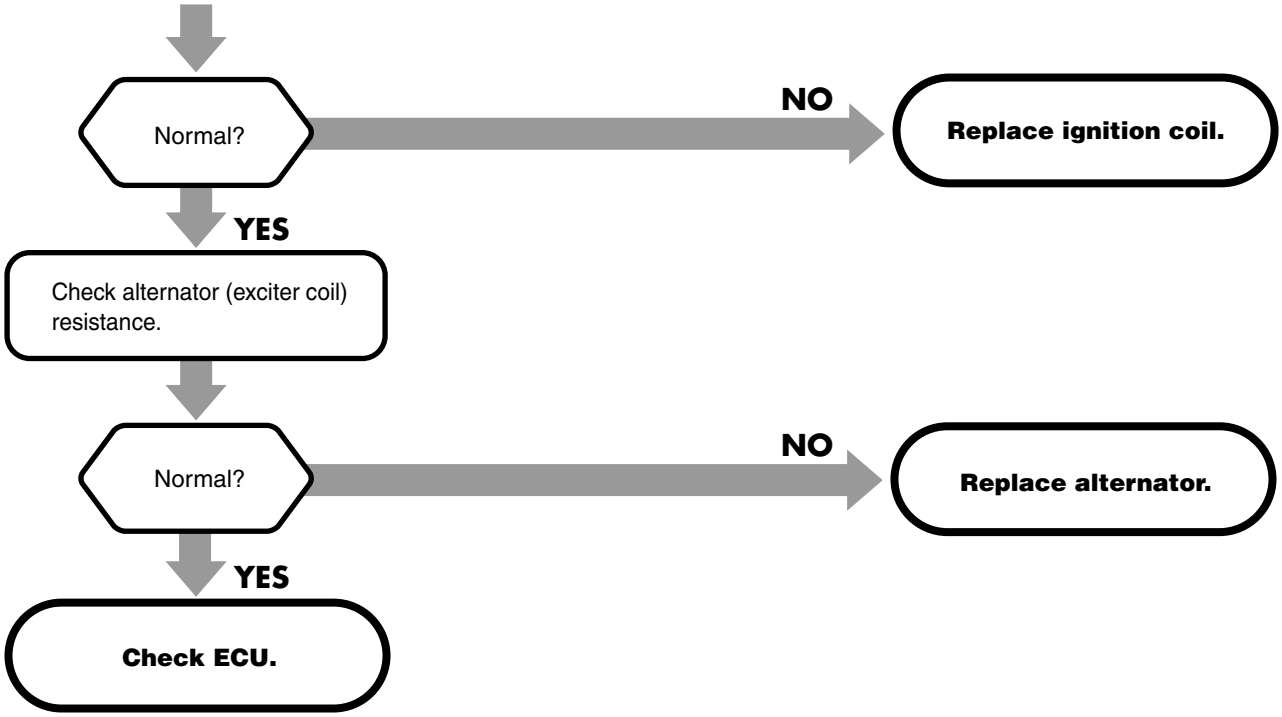
Normal?
NO
Replace ignition coil.
YES
Check alternator (exciter coil) resistance.
Normal?
NO
Replace alternator.
YES
Check ECU.

Fuel System

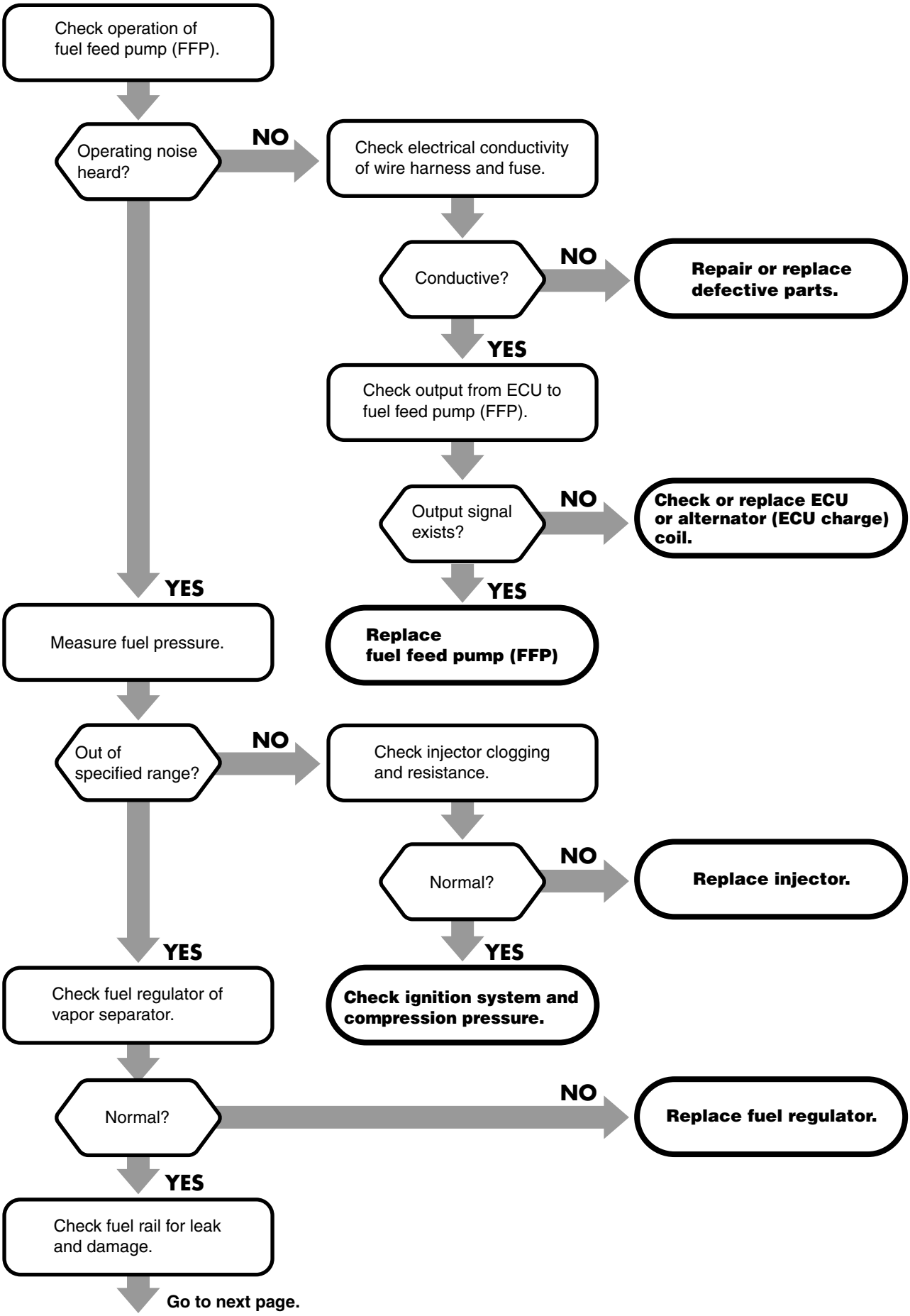
Check operation of fuel feed pump (FFP).
Operating noise heard?
NO
Check electrical conductivity of wire harness and fuse.
Conductive?
NO
Repair or replace defective parts.
YES
Check output from ECU to fuel feed pump (FFP).
Output signal exists?
NO
Check or replace ECU or alternator (ECU charge) coil.
YES
Replace fuel feed pump (FFP)
YES
Measure fuel pressure.
Out of specified range?
NO
Check injector clogging and resistance.
Normal?
NO
Replace injector.
YES
Check ignition system and compression pressure.
YES
Check fuel regulator of vapor separator.
Normal?
NO
Replace fuel regulator.
YES
Check fuel rail for leak and damage.
Go to next page.

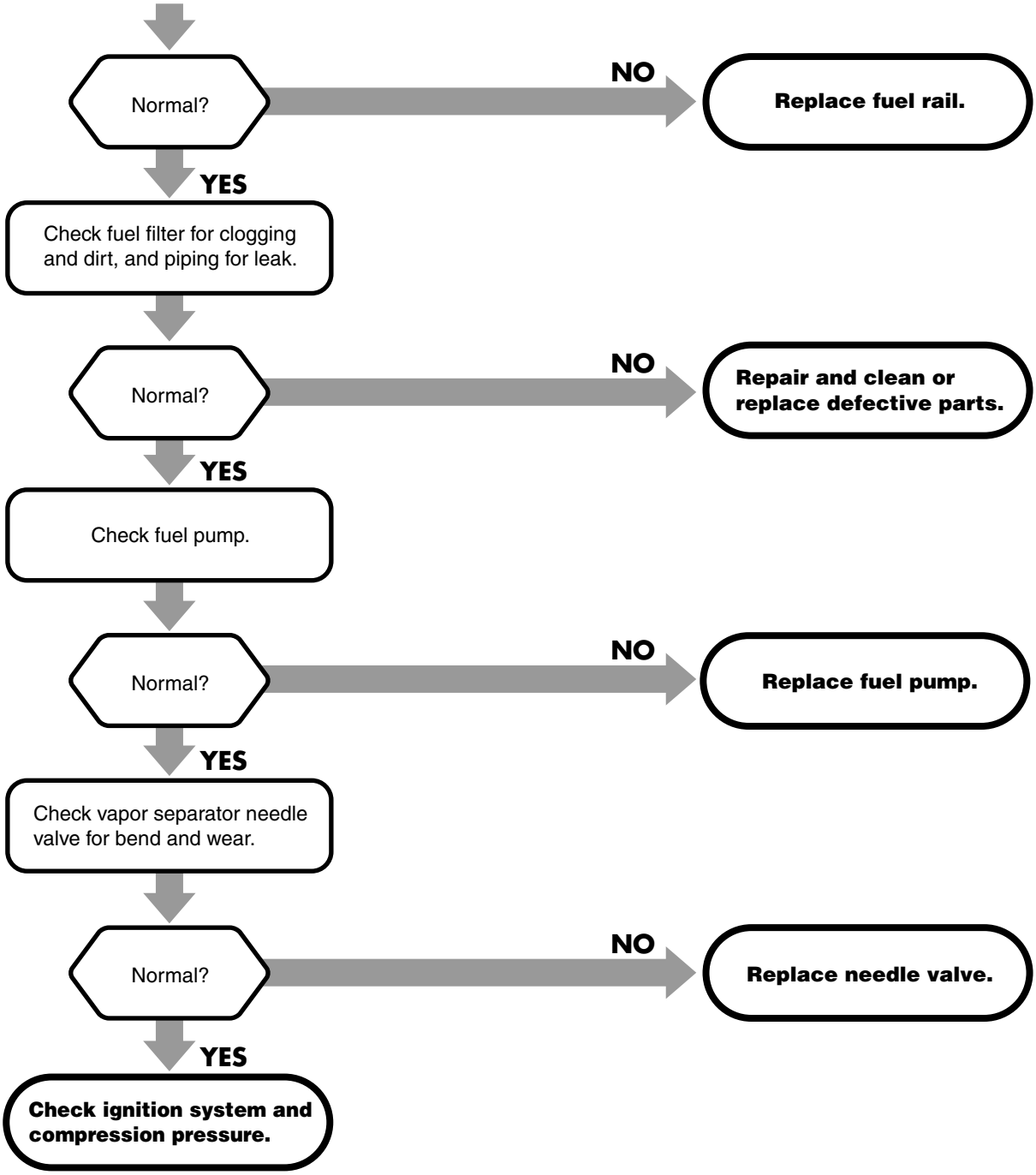
Normal?
NO
Replace fuel rail.
YES
Check fuel filter for clogging and dirt, and piping for leak.
Normal?
NO
Repair and clean or replace defective parts.
YES
Check fuel pump.
Normal?
NO
Replace fuel pump.
YES
Check vapor separator needle valve for bend and wear.
Normal?
NO
Replace needle valve.
YES
Check ignition system and compression pressure.

State 2 Full throttle engine revolution speed is low. Engine revolution speed fall off. Engine stalls. (Defective acceleration or deceleration)

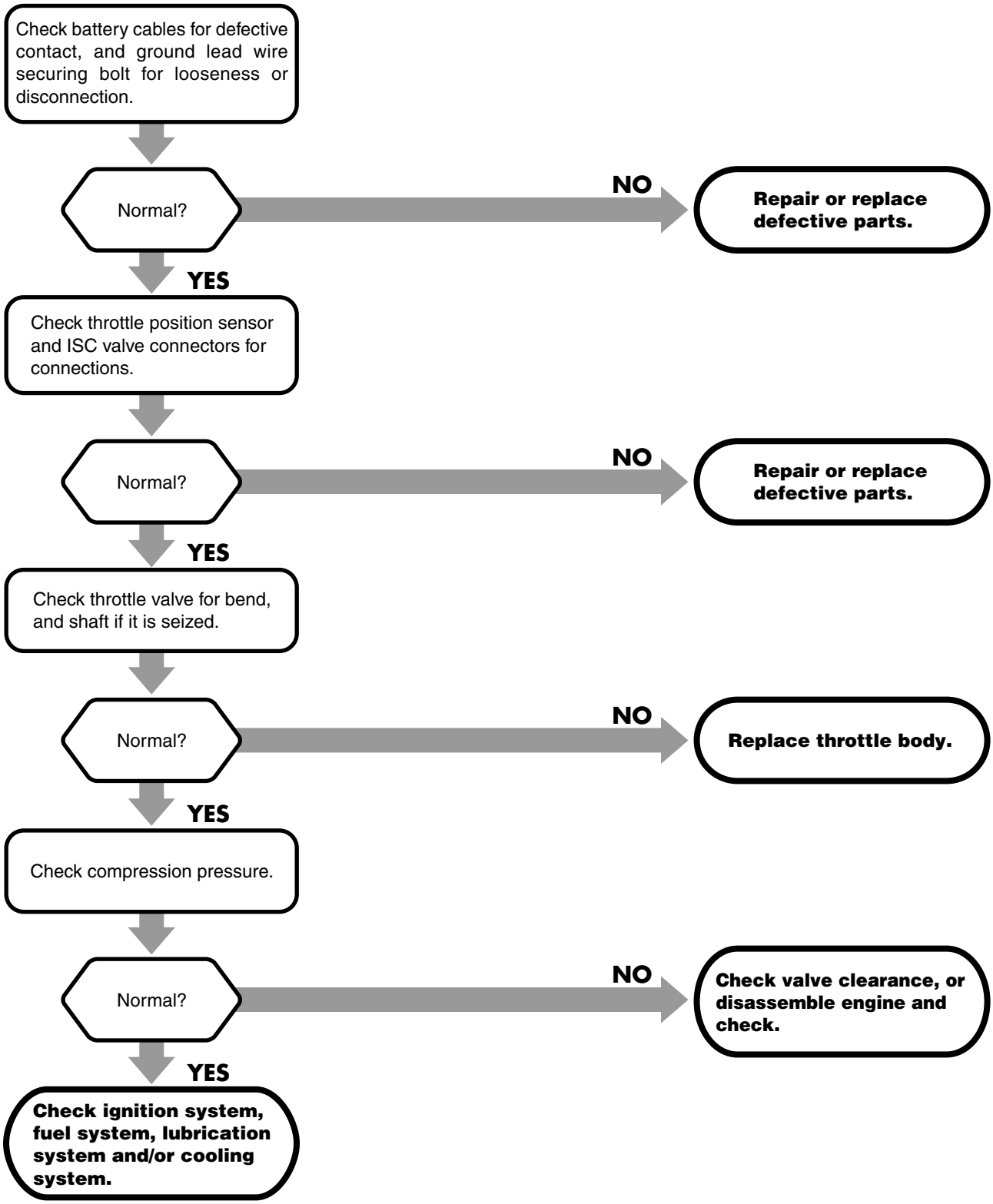

9

Ignition System

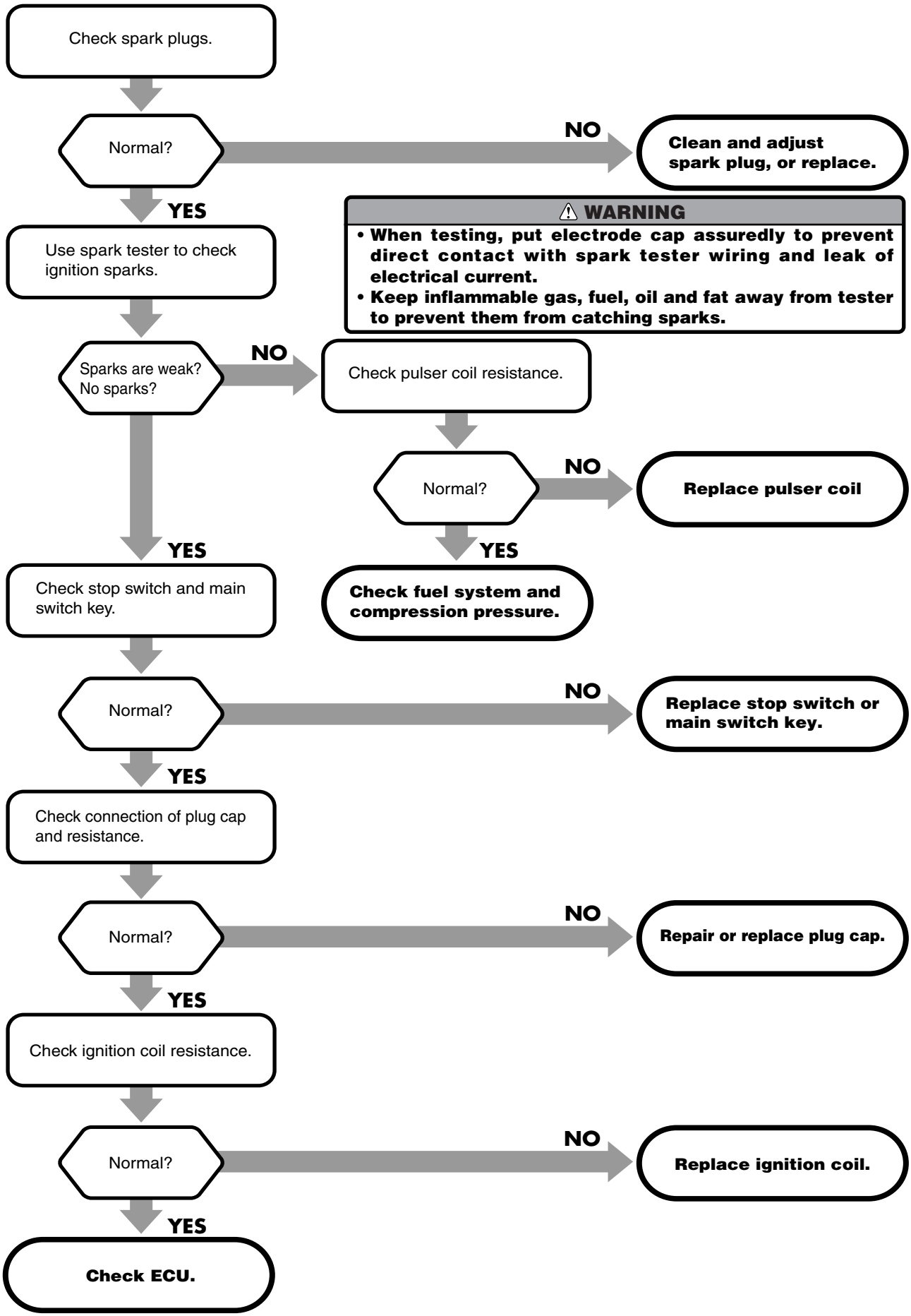

Fuel System

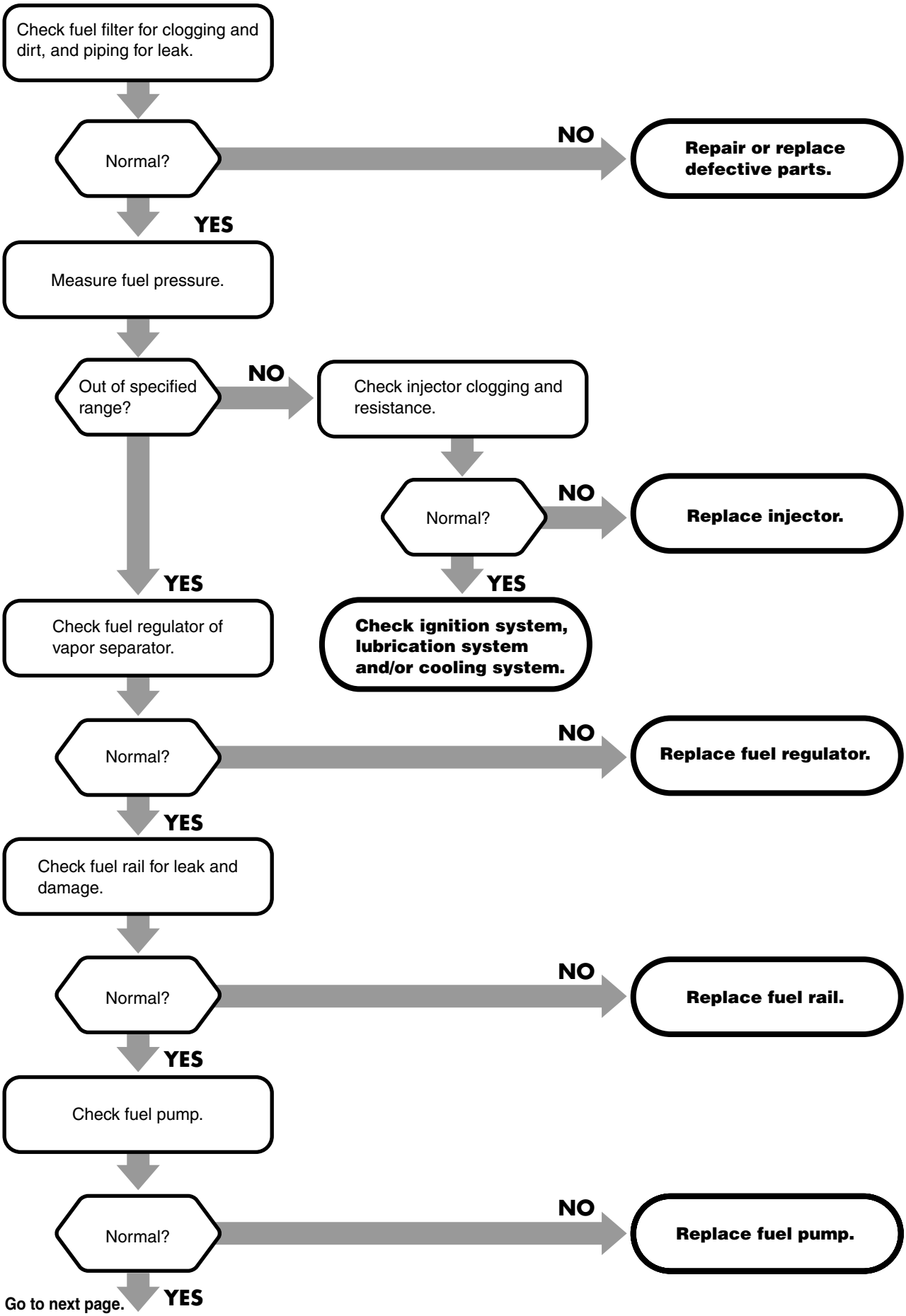

Go to next page.

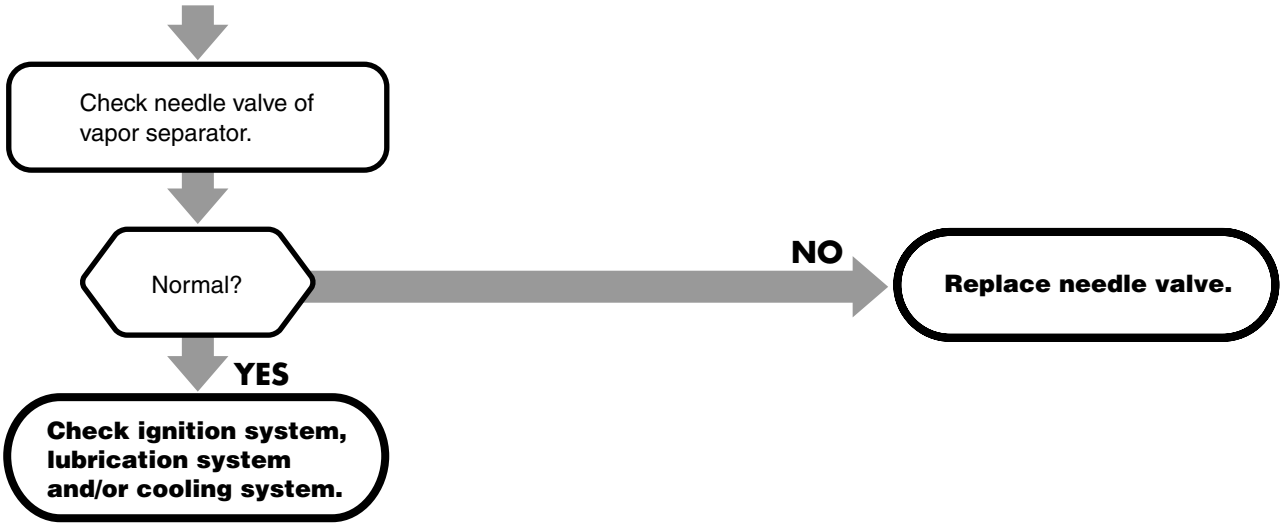

Lubrication System

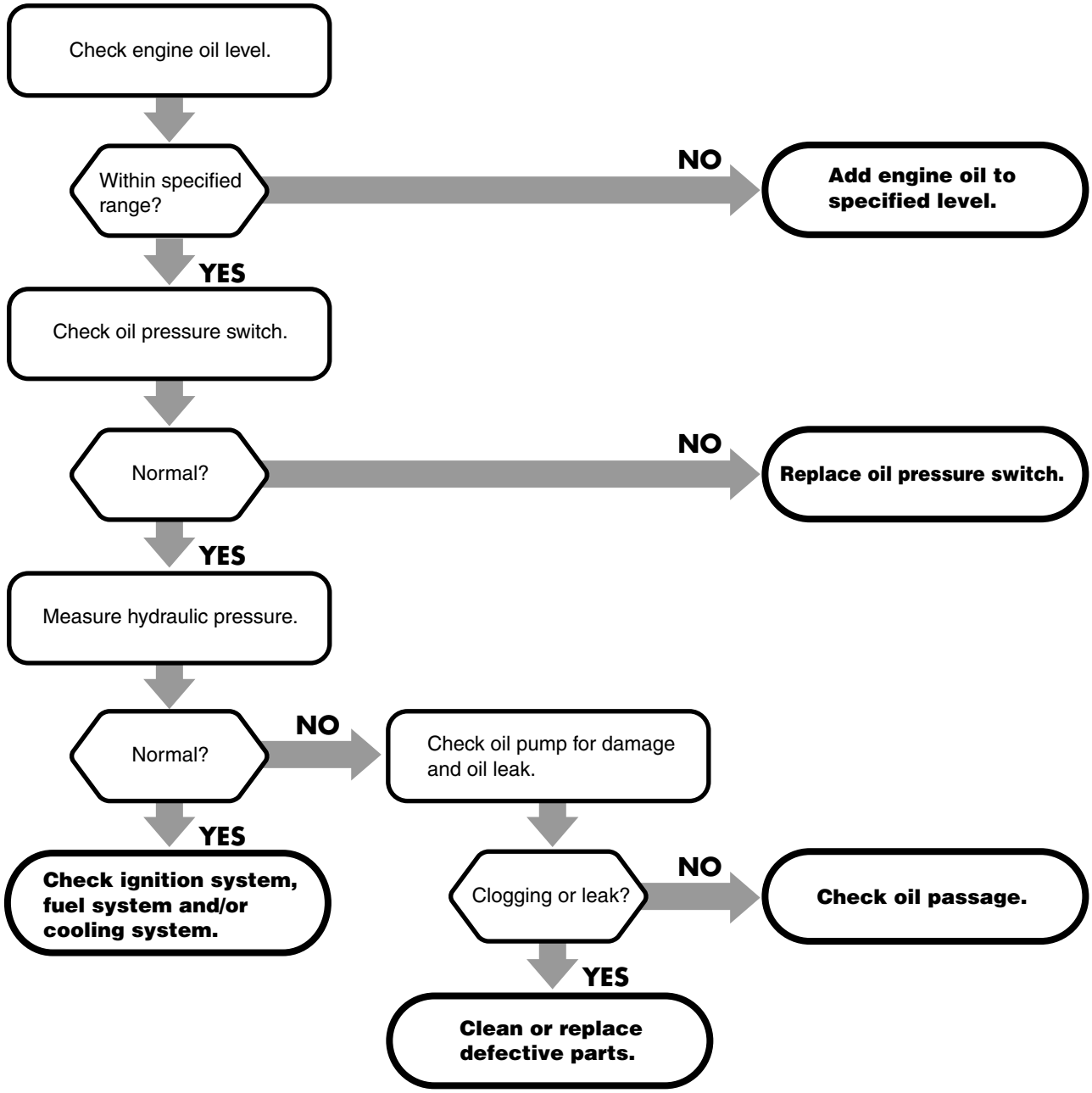

Cooling System

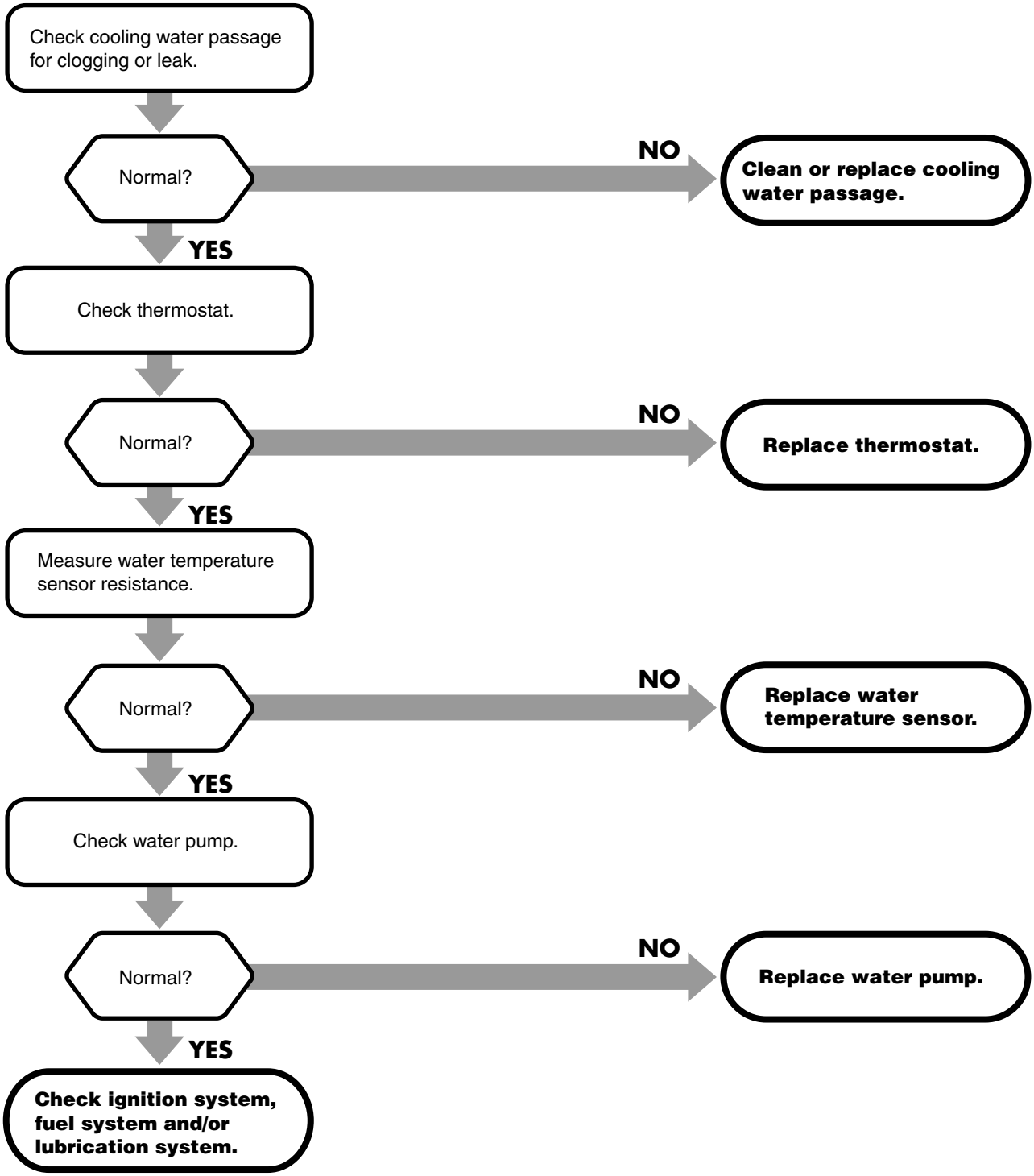

State 3 **Engine rotation is unstable or hunting occurs in low speed range.**

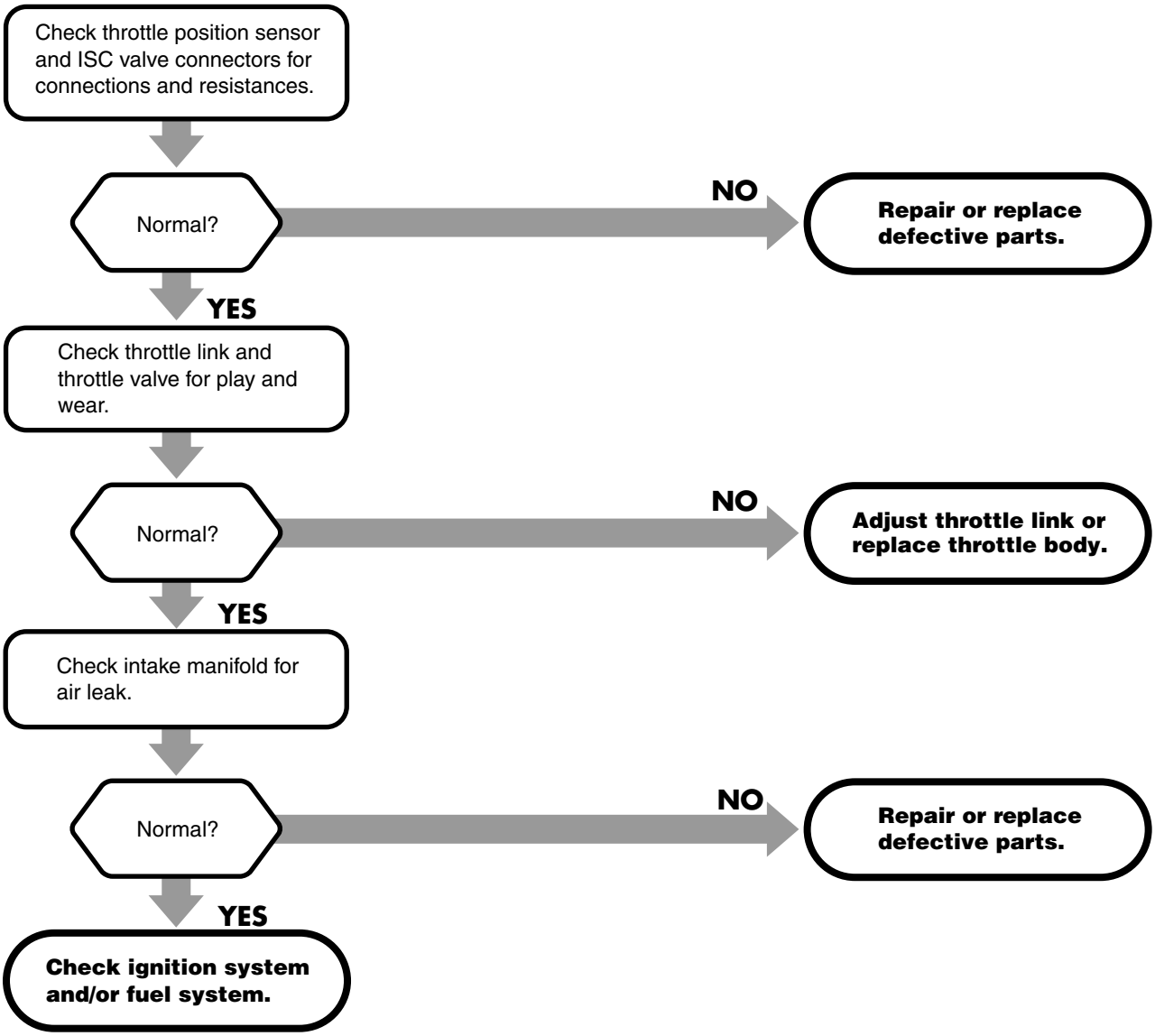

Ignition System

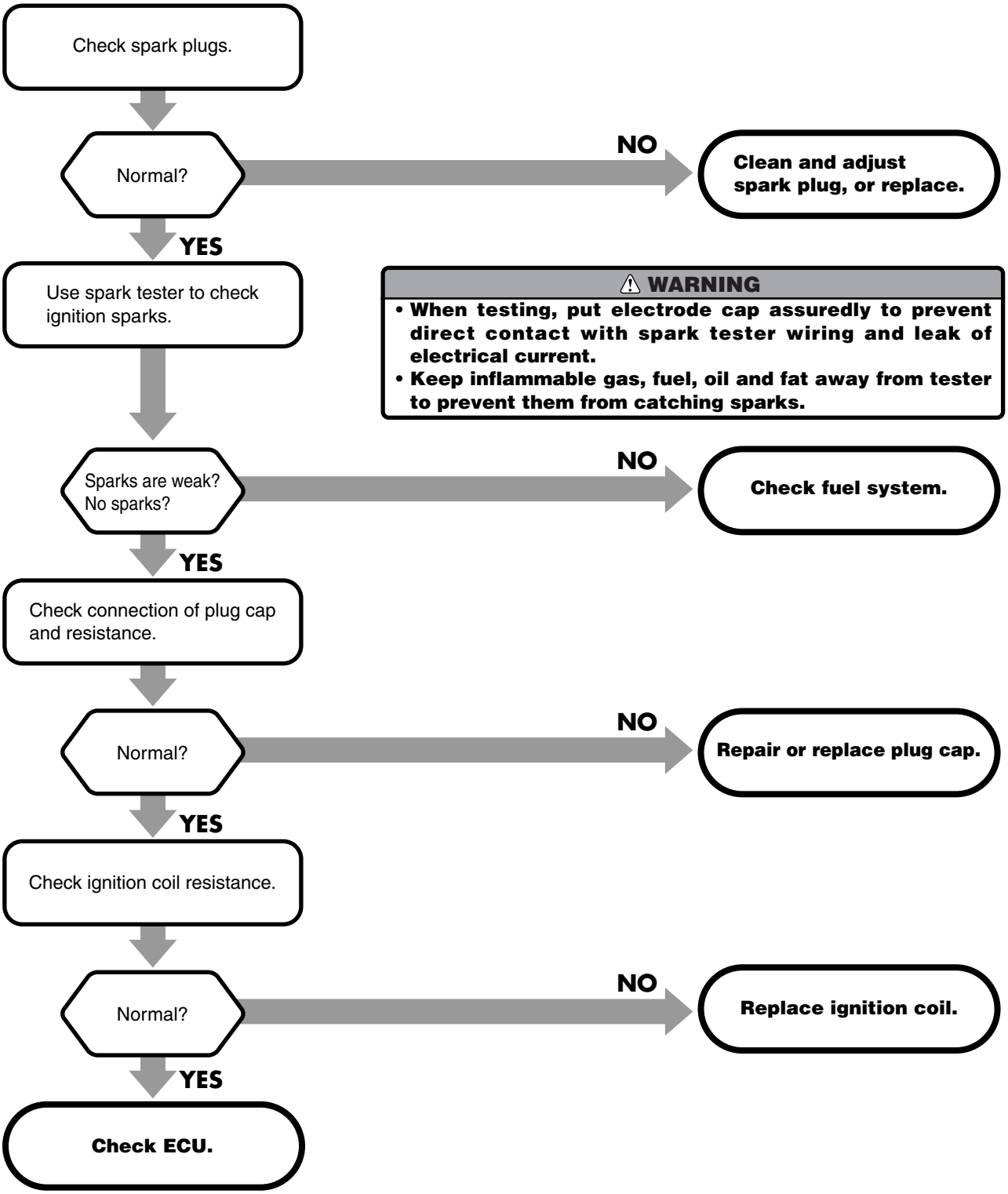

9

Fuel System

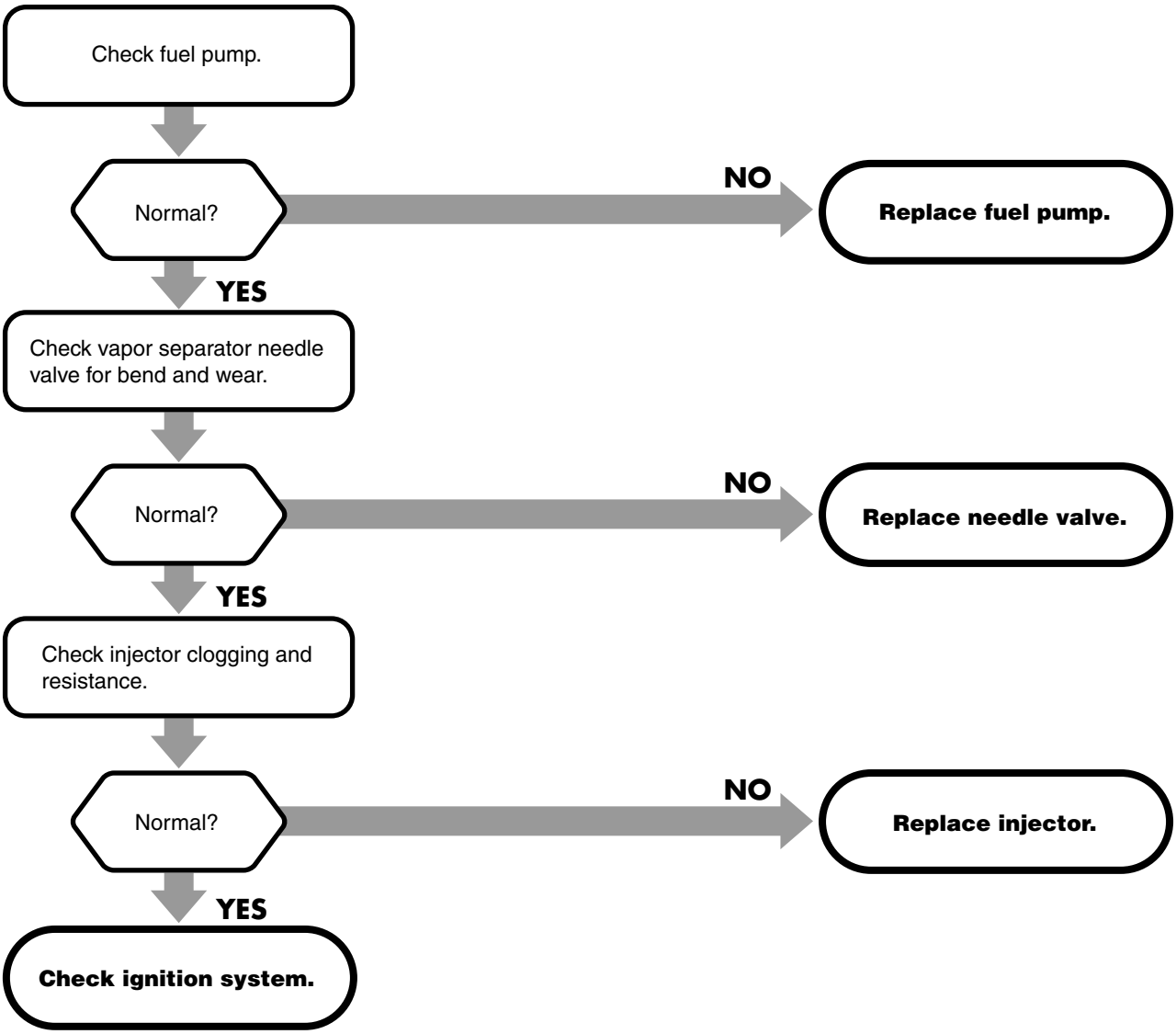
Check fuel pump.
Normal?
NO
Replace fuel pump.
YES
Check vapor separator needle valve for bend and wear.
Normal?
NO
Replace needle valve.
YES
Check injector clogging and resistance.
Normal?
NO
Replace injector.
YES
Check ignition system.

3.PTT Unit

State 1 **PTT will not operate.**

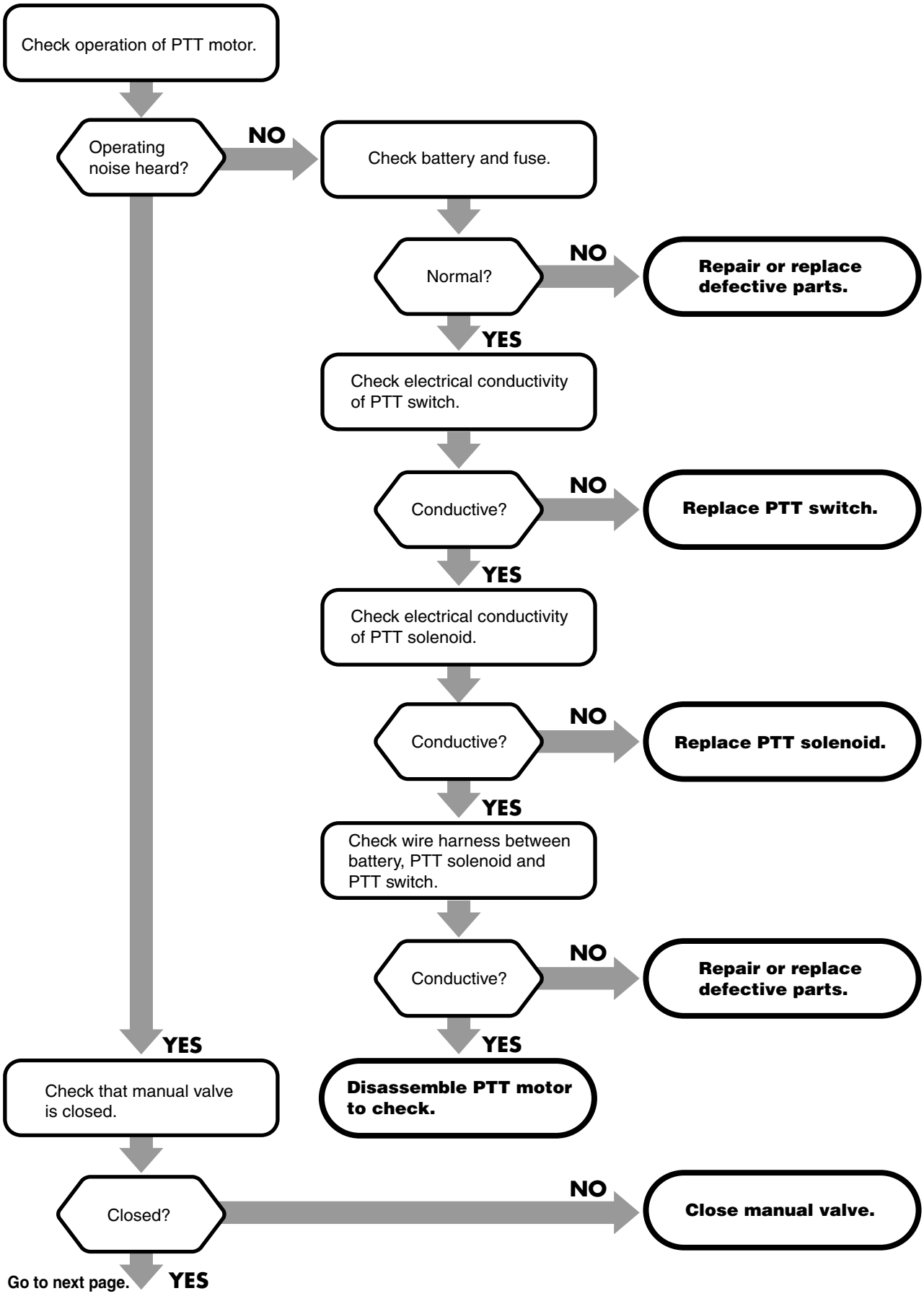

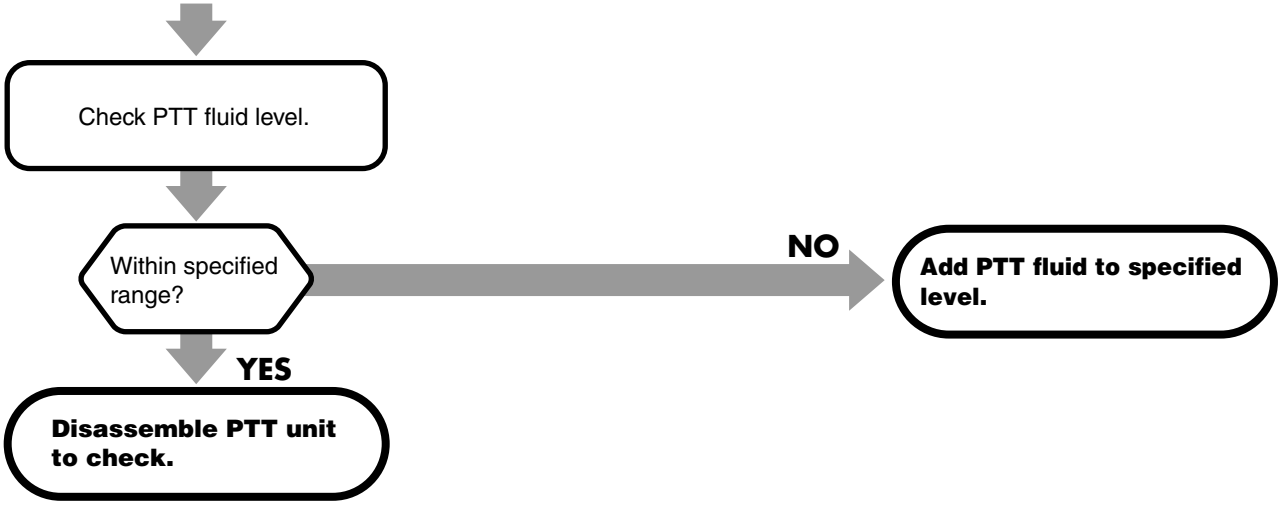

State 2 **PTT is not capable of sustaining outboard motor.**

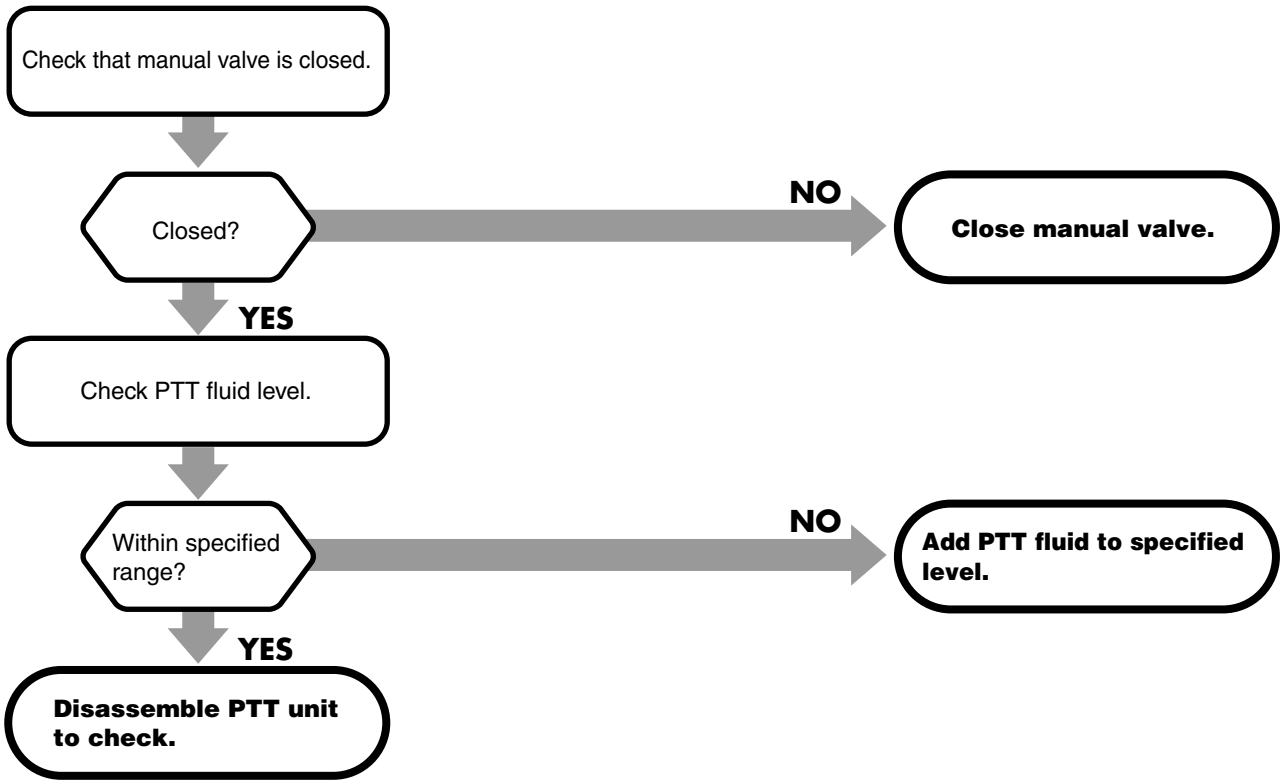

4.3AC Diagnosis

1.Set Up

Read this manual thoroughly, connect diagnosis cable to computer, and then, perform software operations.

- Check that computer is normal.
- Fully charge battery.
- Clean battery terminal to remove dirt and corrosion, and connect battery cables securely.
- Check diagnosis cable and other cables for connection.
- Shift gear into neutral (N).

Applicable Models

3AC Diagnosis is applicable to the following models.

- **4st 25B**
- **4st 30B**

⚠ WARNING

- **Before using 3AC Diagnosis, read notes described in this chapter.**
- **Do not use 3AC Diagnosis during operating boat.**

⚠ CAUTION

Be careful not to expose computer and cables to water spray.

1) Software Install

1. The software is installed automatically once CD is set in the CD drive of computer.

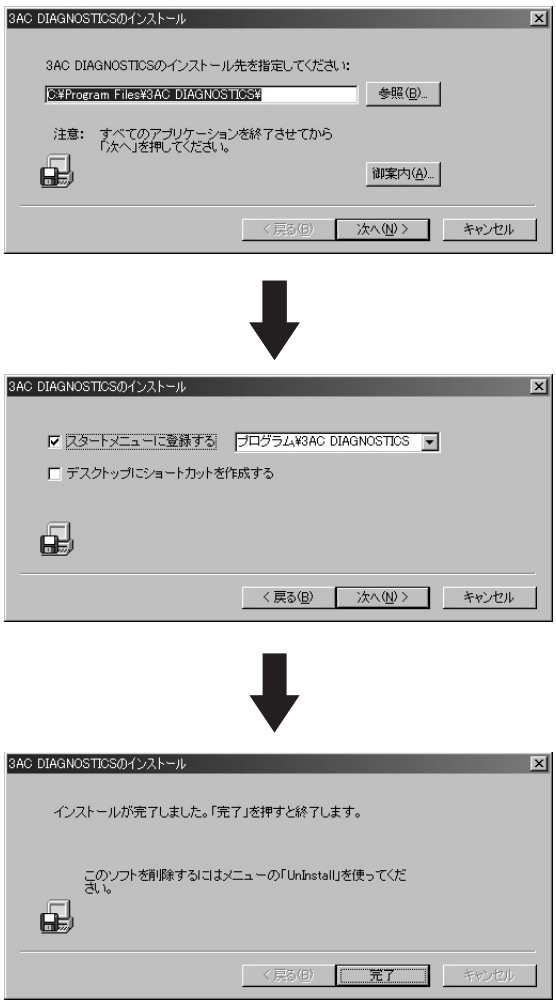

2. After the software is installed, select "3AC DIAGNOSTICS" from "PROGRAM" to start the program.

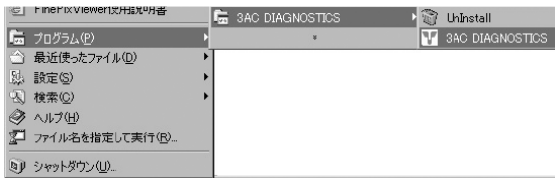

3. After computer is restarted, the program is started simply by double-clicking the short-cut icon on the desktop.

2) If putting CD into CD drive will not cause installation software to start.

Double-click "install.exe" contained in the CD. Installation software will start.

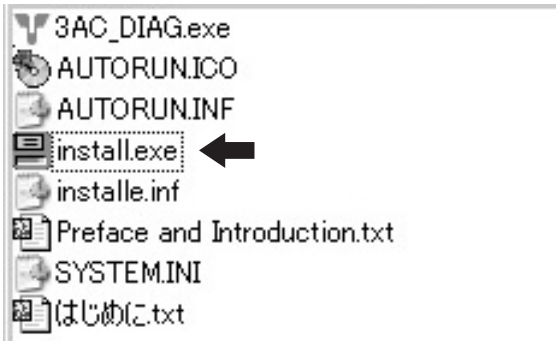

3) Diagnosis File Information

File Names	Contents
3AC_DIAG.exe SYSTEM.INI	File that comprises 3AC DIAGNOSIS.
AUTORUN.ICO AUTORUN.INF install.exe installe.inf	File for installing files of 3AC DIAGNOSIS into computer.
Preface and Introduction.txt はじめに.txt	Describes notes to be observed before using 3AC DIAGNOSIS. Be sure to read before using 3AC DIAGNOSIS.

9

2.Hardware Connection

1) Preparation

Diagnosis Harness
Battery (12V)
Computer

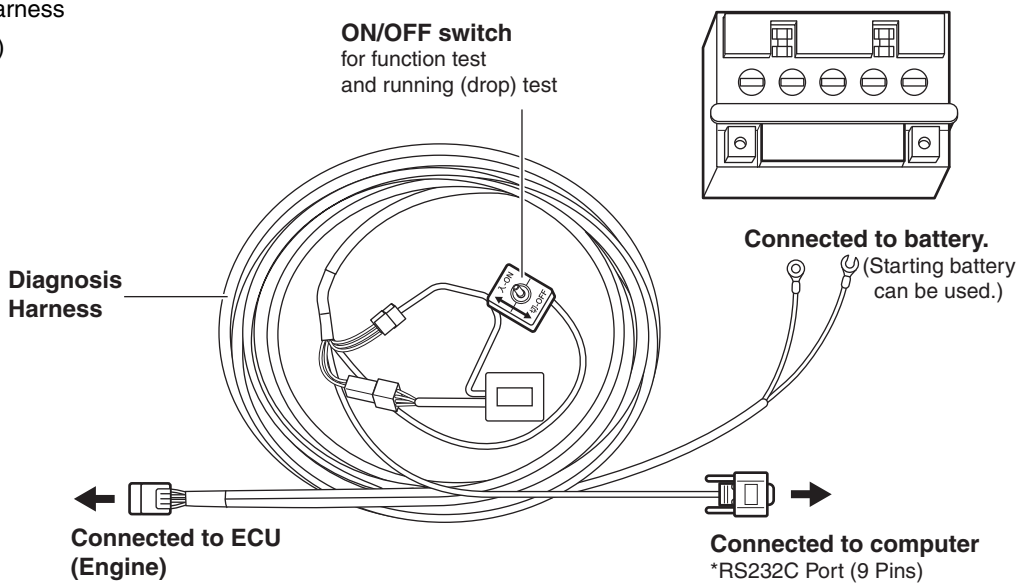

If your computer is not provided with RS232C Port (9 Pins), use USB conversion cable as shown.

- When using USB conversion cable, install necessary software in accordance with the instructions, and then, proceed to next operation.
- USB cable operates only on OS of Windows 98 and after. (It will not operate on Windows 95.)

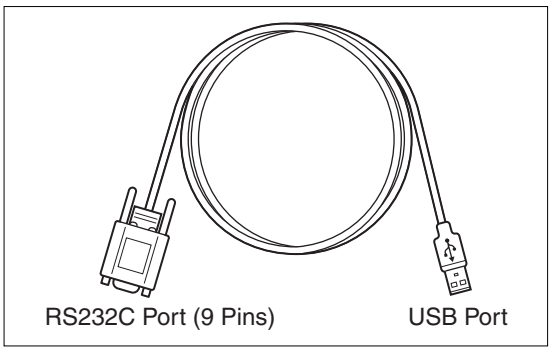

3AC DIAGNOSIS connection point (engine)

- Connect to connector on upper part of ECU.

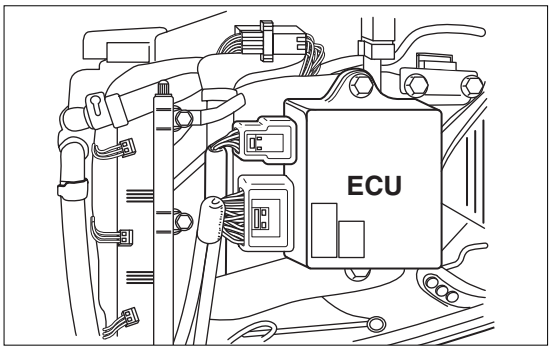

3.Position of ON/OFF switch for function test and running (drop) test

In principle, use 3AC DIAGNOSIS with the switch set to OFF.
Use ON position only for function test and running (drop) test.

OFF : Test history is updated.
Use this position for other than function test and running (drop) test.

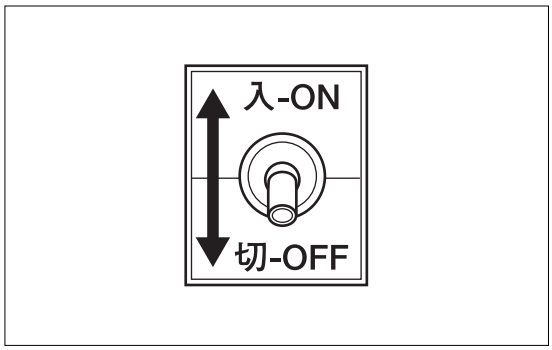

ON : Test history is not updated.
Use this position for function test and running (drop) test.

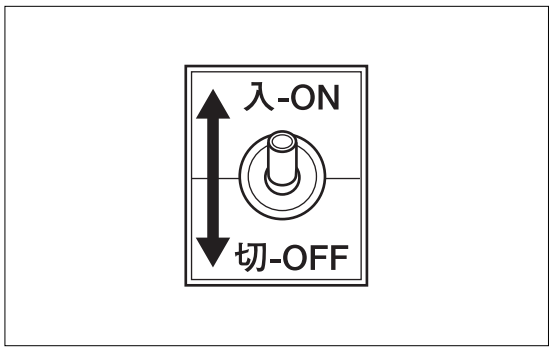

9

4.Operating Procedure

Operating procedure is possible to be renewed. Using the newest version is always recommended.

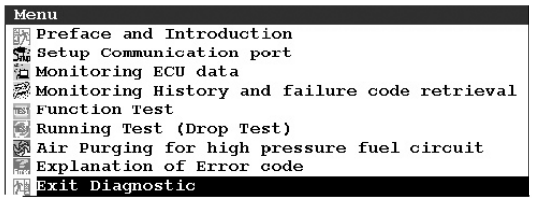

1) Start Up

Double-click "3AC_DIAGNOSTICS" in "PROGRAM" or its short-cut icon. Menu screen appears.

2) Menu Selection

Use "↑" or "↓" key on the keyboard or press the number to move cursor to menu item to be executed, and press "Enter" key.

3) Preface and Introduction

Thoroughly read notes described in "Set Up" section of Chapter 9 before operation.

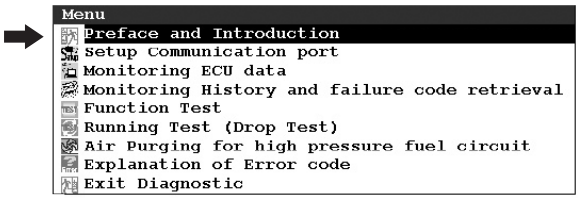

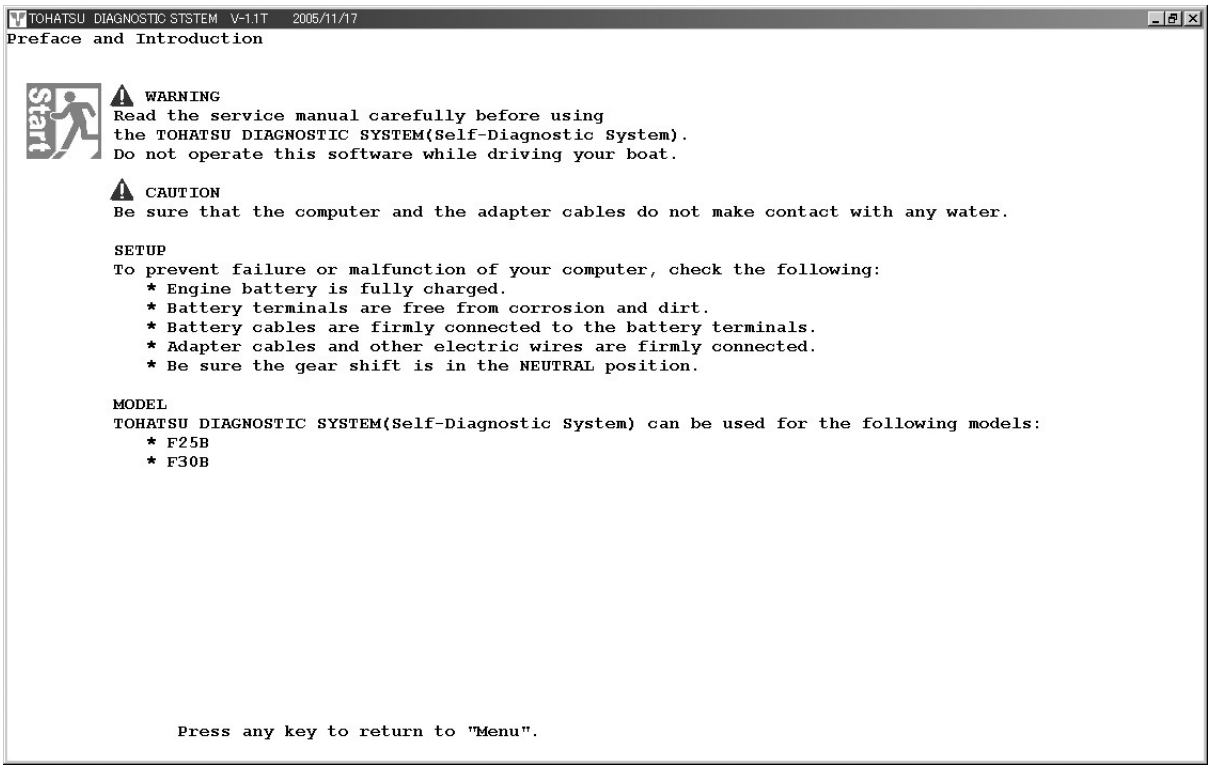

4) Setting Communication (COM) Port RS232C port.

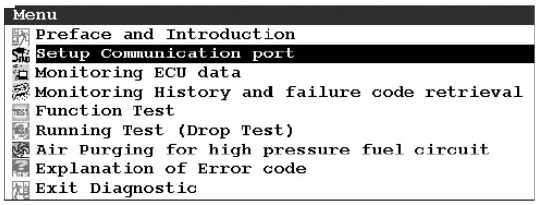

"Com port No = ☐ "

Current COM port number appears.

"New Com Port No = ☐ "

New COM port number can be input.

Input COM port number of your computer.

Press "Enter" key to return to "Menu" screen.

- Current COM port number can be known by going through "Control Panel" → "Hardware" → "Device Manager".
- Only one of numbers "1" to "4" can be input to COM port.
- If COM port number of USB port of computer on which USB adapter is used is one of numbers from "5" to "8", change it to a vacant COM port of one of numbers from "1" to "4", and set new COM port number.

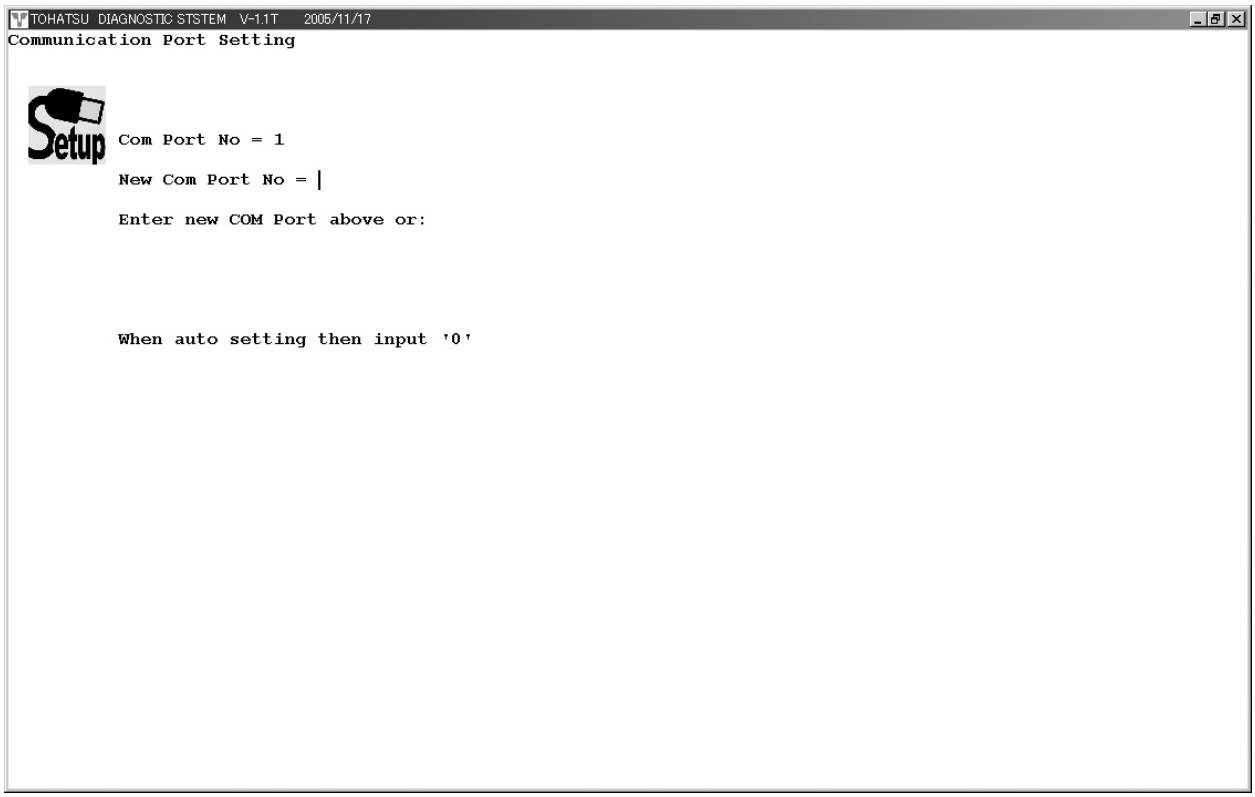

9

5) Monitoring ECU data

Current states of engine can be seen on the screen.

Press "F1" key to return to "Menu" screen.

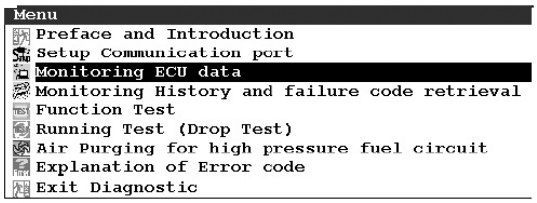

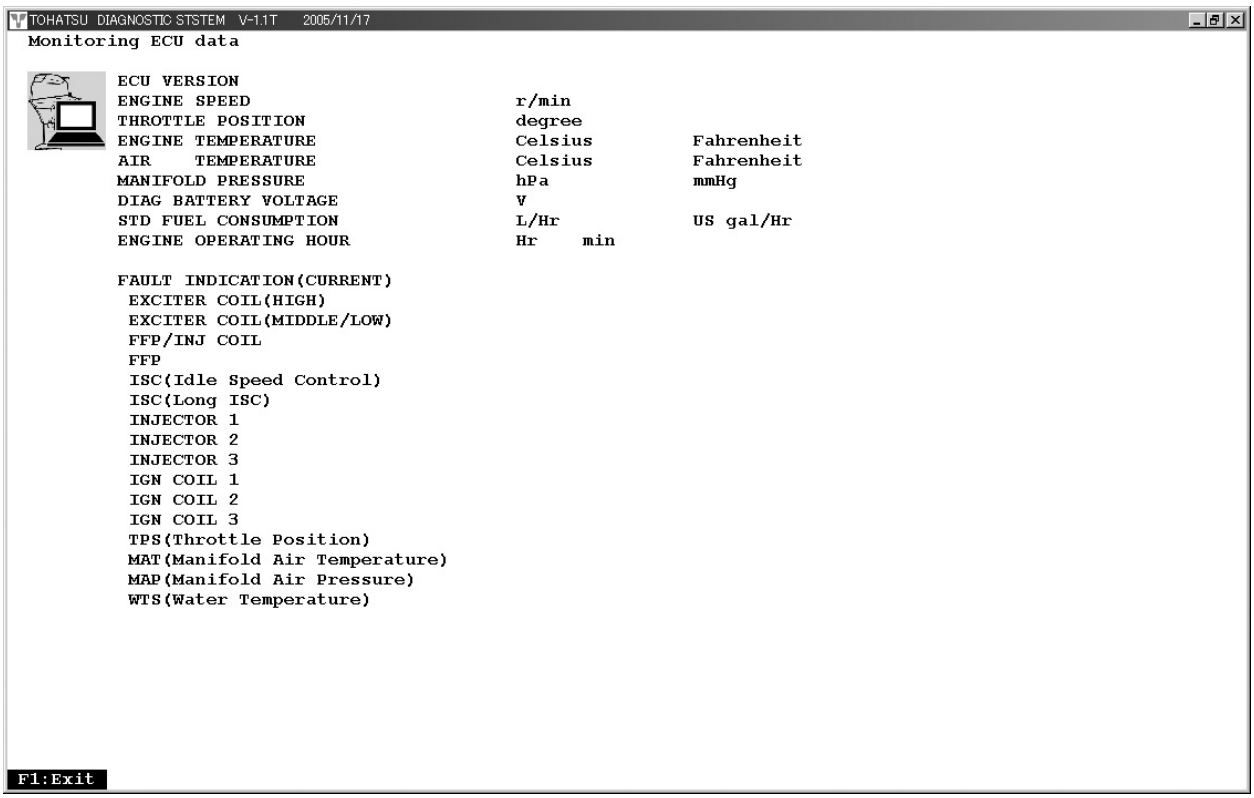

6) Monitoring History and failure code retrieval

Malfunction history of engine can be seen on the screen.

Press "F1" key to return to "Menu" screen.

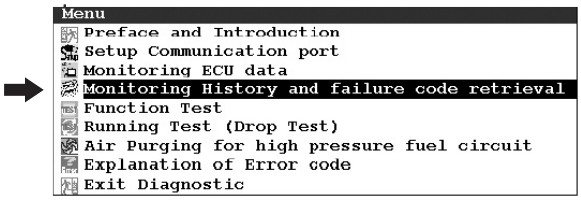

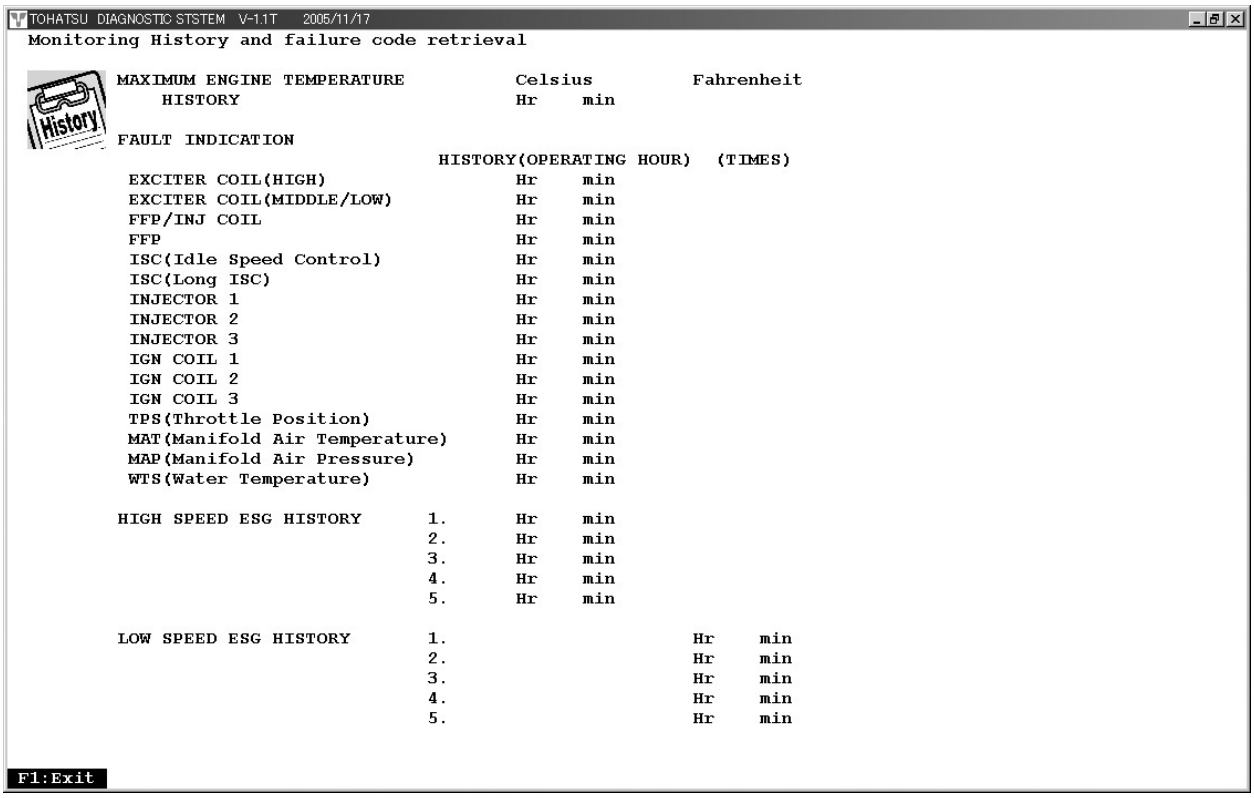

9

7) Function Test

Set switch of diagnosis harness to "ON" when performing function test.

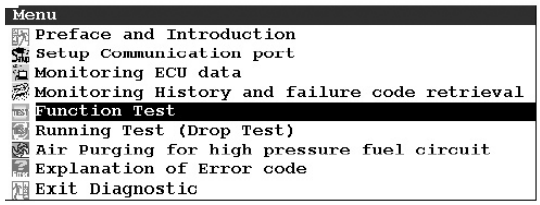

Malfunction of injectors or their operating state can be checked.

Enter the number of item to be checked.

"1" : Operation (on/off) of #1 injector

"2" : Operation (on/off) of #2 injector

"3" : Operation (on/off) of #3 injector

"4" : Operation (on/off) of ISC valve

"5" : Operation (on/off) of fuel feed pump (FFP) in vapor separator

"6" : Operation of warning buzzer

"7" : Lighting of warning lamp

Tiller Handle Model : Warning lamp (LED) on the front of bottom cowl

Remote control model : Warning lamp (oil) on the tachometer

Press "F1" key to return to "Menu" screen.

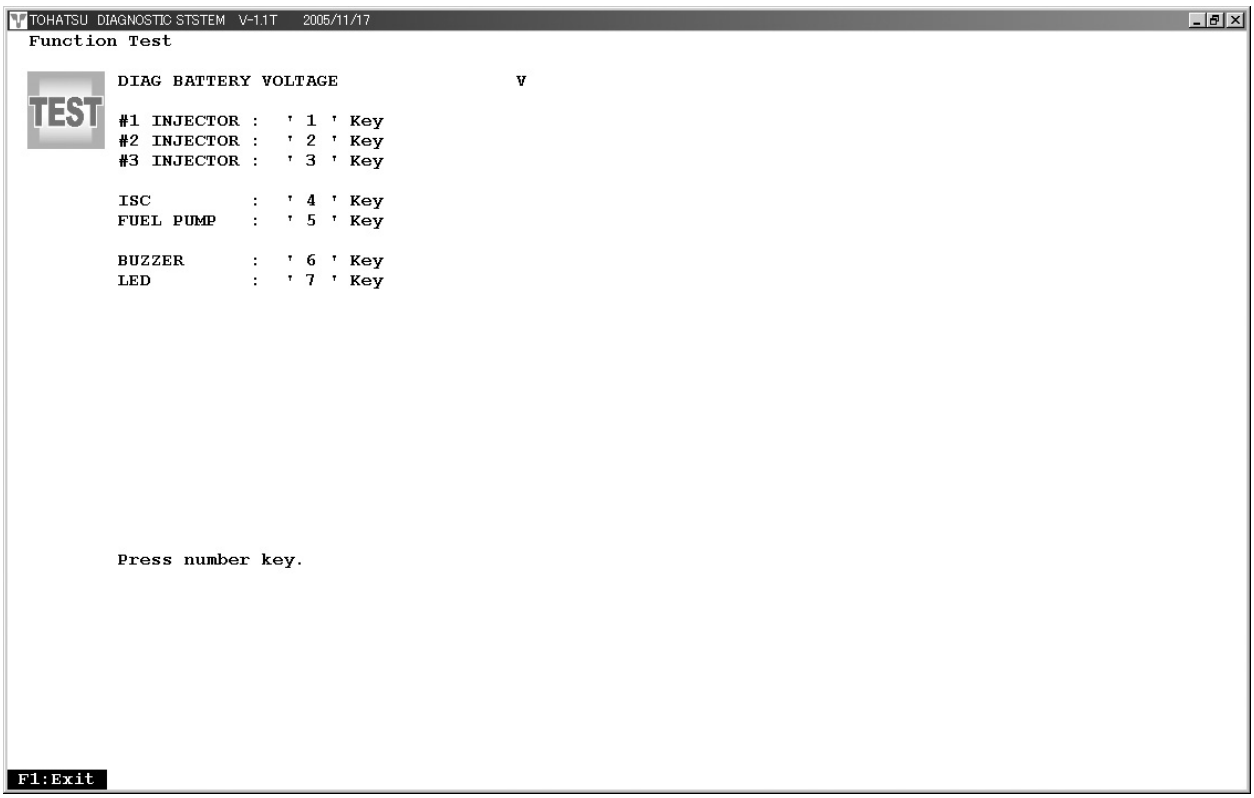

8) Running Test (Drop Test)

Set switch of diagnosis harness to "ON" when performing running (drop) test.

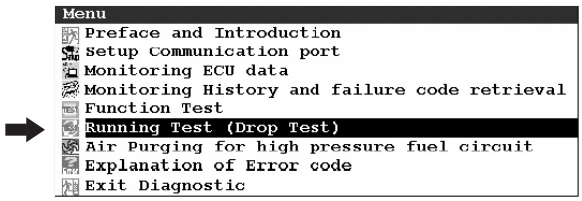

This test stops operation injector or ignition coil temporarily during engine operation for checking operating state according to reduction or operating noise level and engine speed.

Enter the number of item to be diagnosed.

"1" : Temporary stop of #1 injector
"2" : Temporary stop of #2 injector
"3" : Temporary stop of #3 injector
"4" : Temporary stop of "1" ignition coil
"5" : Temporary stop of "2" ignition coil
"6" : Temporary stop of "3" ignition coil

Press "F1" key to return to "Menu" screen.

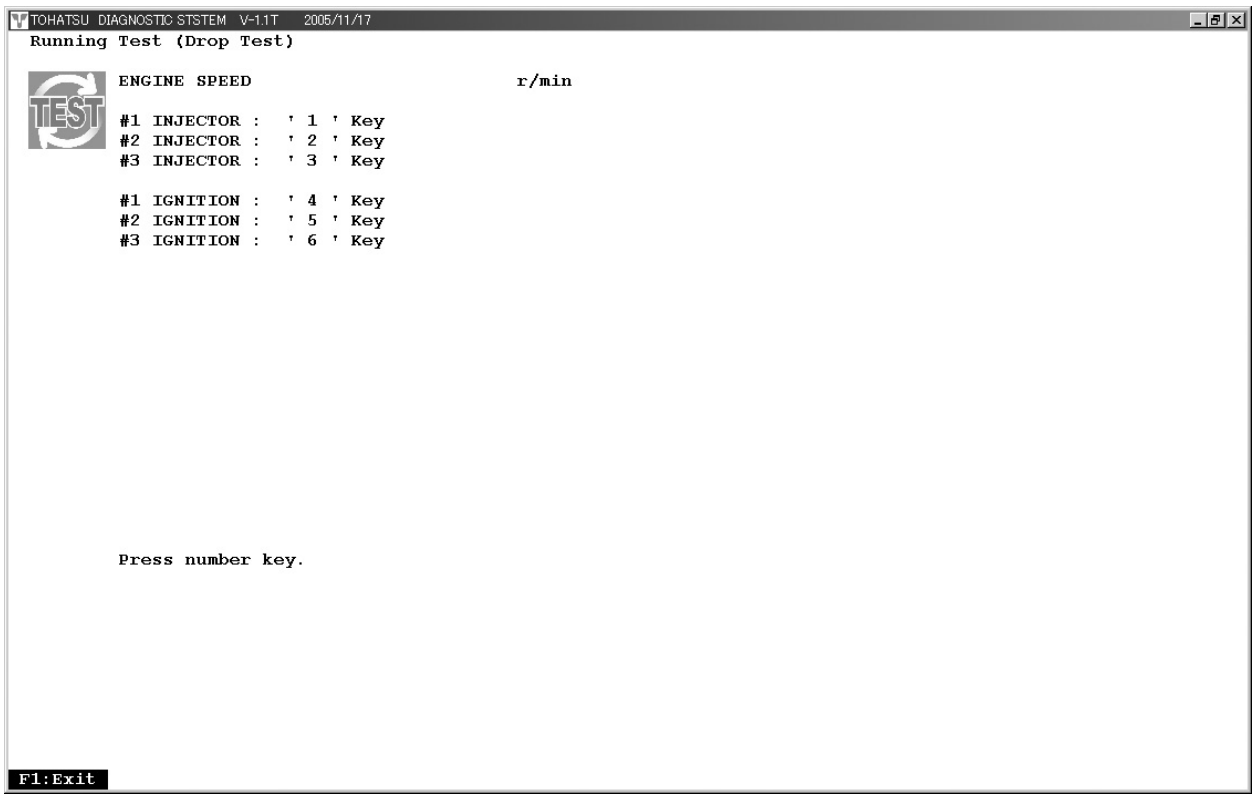

9

9) Air Purging from high pressure fuel circuit

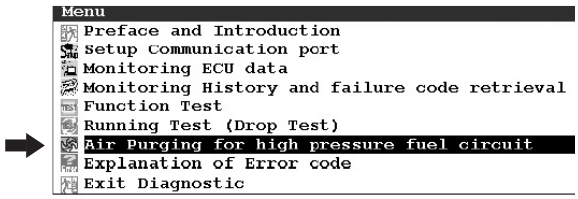

Squeeze fuel primer bulb repeatedly until it becomes hard to feed fuel to vapor separator.

* Press "1" key to operate fuel feed pump (FFP) for two seconds to feed fuel to all injectors.

* Then, pulling recoil starter opens all injectors to purge air from high pressure fuel circuit.

Repeat the above steps several times until engine can be started.

Press "F1" key to return to "Menu" screen.

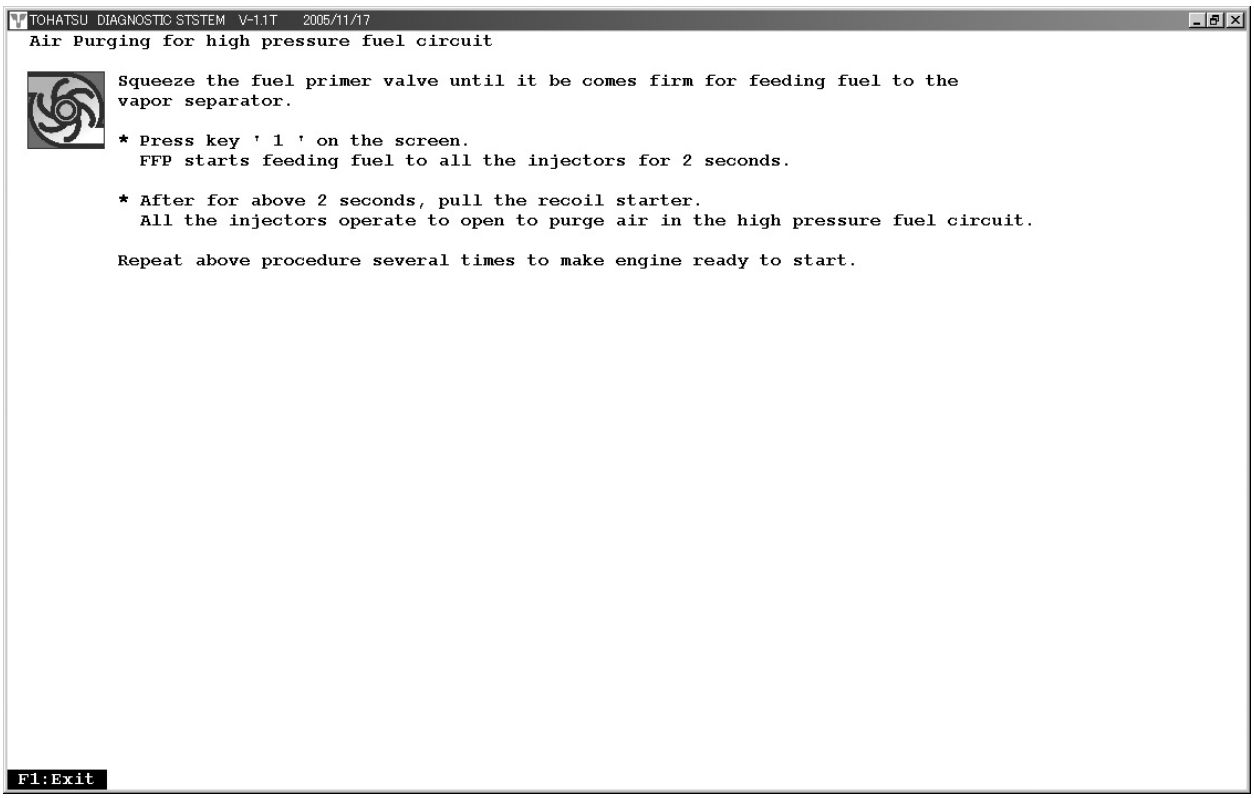

10) Explanation of Error code

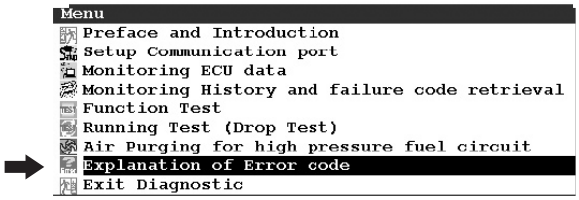

Description of error code appears on the screen.

Example :

Error code : 1 Communication Error

Communication with ECU is not ready.

Check following items.

* Connection between computer and ECU
* Connection with battery
* Setting of computer COM port number. Use "Setup Communication port" on the "Menu" screen to set COM port number.

Press any key to return to "Menu" screen.

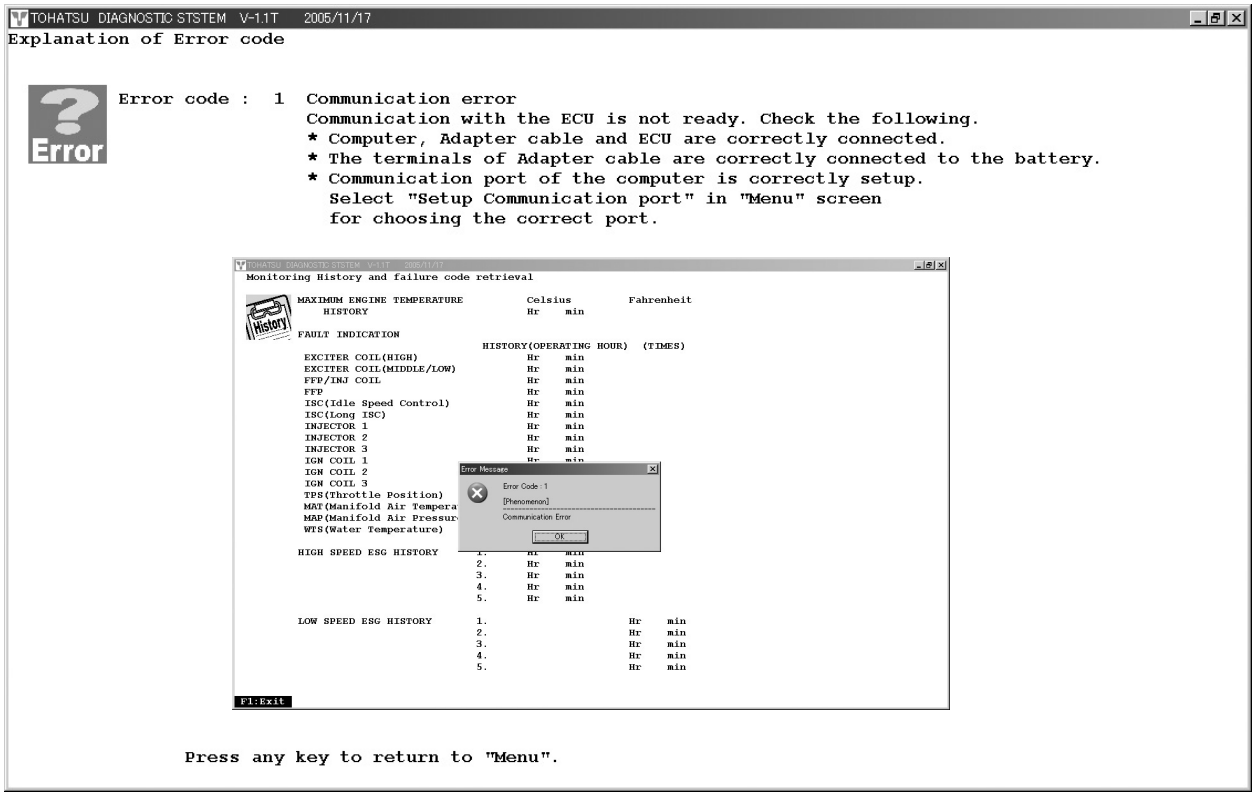

11) Exit Diagnostic

Select "Exit Diagnostic" to end .3AC DIAGNOSIS.

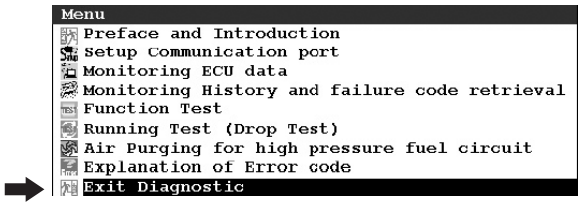

9

10

Accessories

1 Remote Control Components ····· 10-2

1) Installation of Remote Control Cable (Engine Side) Remote Control Model ····· 10-2

2 Installation of Meters and Battery ··· 10-5

1) Installation of Meters ····· 10-5

2) Installation of Battery ····· 10-5

3) Wiring Diagram of Remote and Control Meters ··· 10-6

3 Operation ····· 10-7

1) Warning Indication ····· 10-7

1.Remote Control Components

1) Installation of Remote Control Cable (Engine Side)

Remote Control Model

1. Turn hook lever on the bottom cowl downward and remove top cowl.

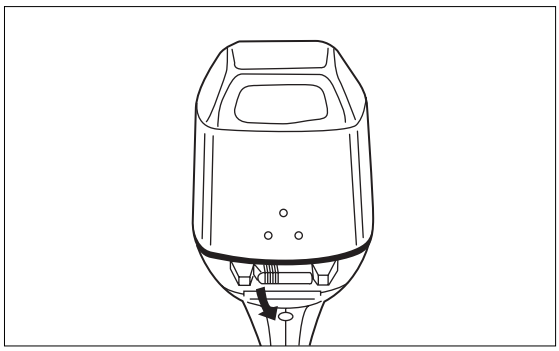

2. Remove cable joint snap pins ③ and washers from throttle side ① and shift side ②, and then, remove two cable joints.

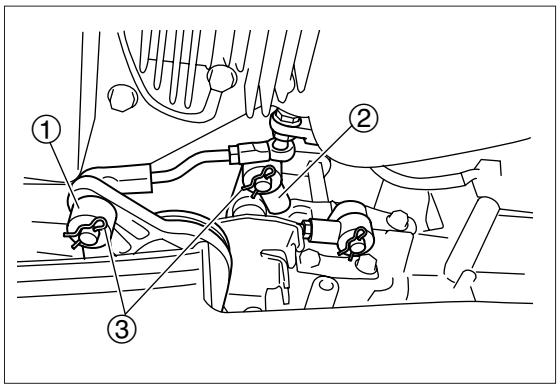

3. Screw cable joint on the tip of remote control cable by approximately 10mm. (10mm is equivalent to 9 threads.)
   Shift cable is the one of which tip is moved earlier than another cable when remote control lever ④ is set to forward (F) side ⓓ until it stops once (approx. 32 degrees).

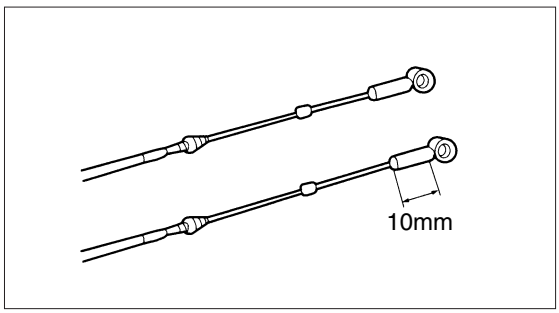

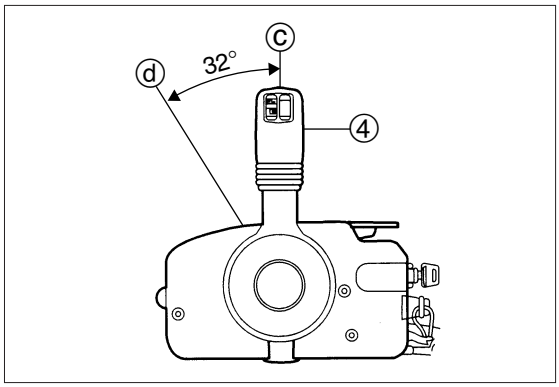

4. Set remote control lever ④ to neutral (N) ⓒ, and check that neutral throttling lever ⑤ is at full close position ⓑ.

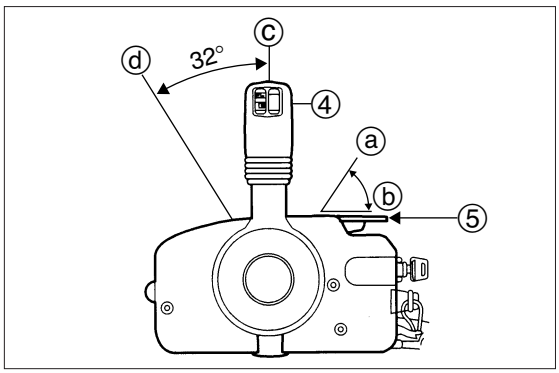

5. Set shift arm ⑥ to forward (F), neutral (N), reverse (R) and then to neutral (N) positions.

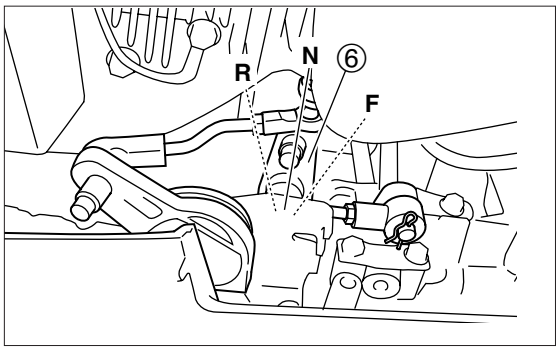

6. Set throttle drum ⑦ to full close position.

Check that throttle valve contacts with full close stopper.

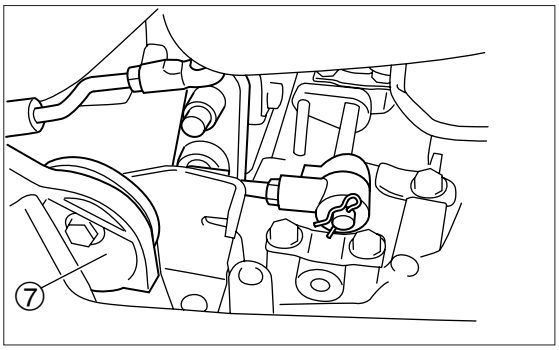

7. Adjust screw-in length of cable joint ⑧ so that hole of cable joint is brought to shift arm pin ⑨.

⚠ WARNING

Screw-in remote control cable joint at lease 10mm ⓔ.

After adjusting remote control cable joint, fix it with remote control cable fully pushed in.

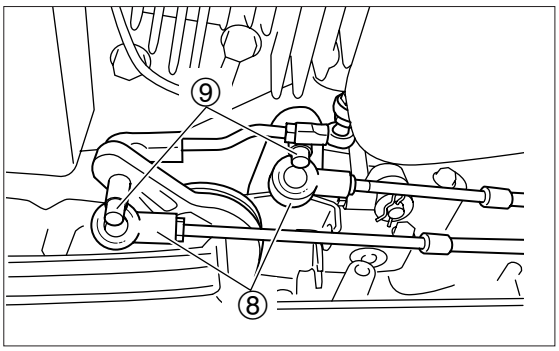

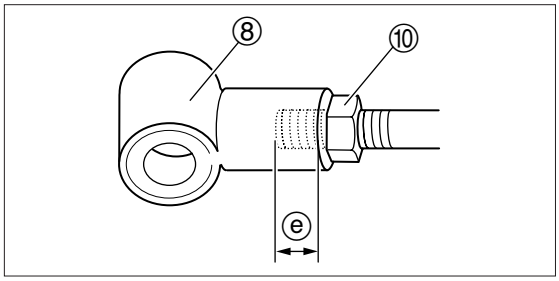

8. Lock joint with nut ⑩, put it on the pin, and secure with washer and snap pin ⑪.

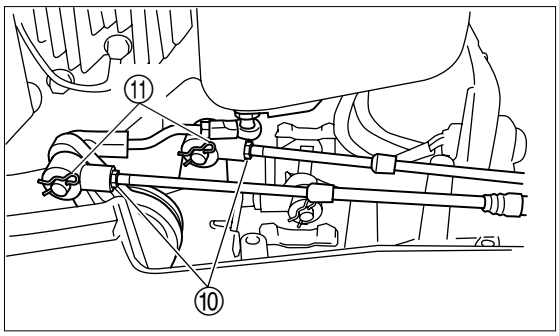

9. Check that shifting control lever ④ forward (F) by approximately 32 degrees (ⓓ) , where it is stopped once, makes the gear engage, and fully shifting the lever makes throttle valve fully open, and then, check that shifting the lever reverse (R) by approximately 32 degrees (ⓔ), where it is stopped once, makes the gear engage, and fully shifting the lever makes throttle valve fully open.
Then, check that, when control lever is returned to neutral position (N) ⓒ, throttle valve is fully closed ⓕ. Since throttle position sensor (TPS) operates incorrectly if throttle valve does not contact with full close stopper with the valve fully closed, readjust cable joint position at outboard motor side and reinstall it if the valve does not contact with full close stopper in this case.

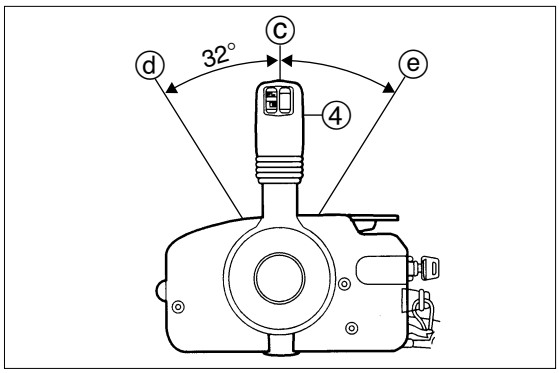

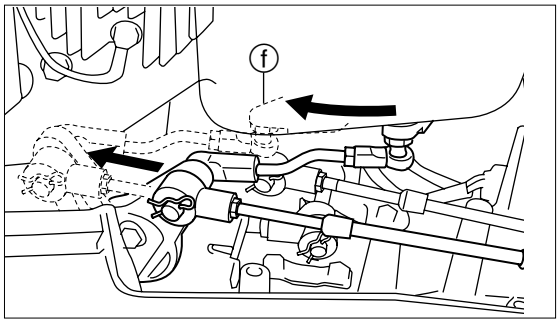

10. Connect cord ass'y connectors.

⚠ CAUTION

Do not disconnect cord ass'y while engine operates.

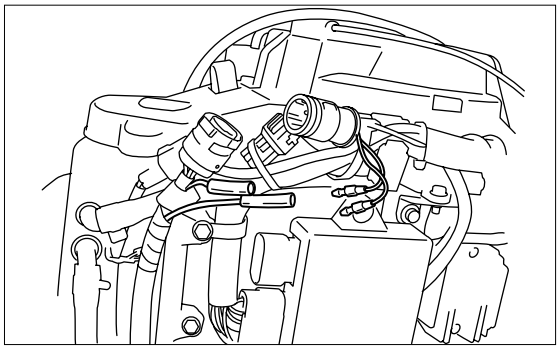

11. Run cord ass'y ⑬ and remote control cables ⑭ through grommet ⑫ located on the front of bottom cowl. Attach remote control cable groove to bracket, and then fix it to bottom cowl.

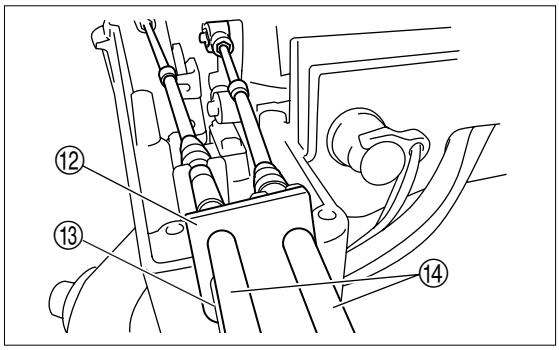

2.Installation of Meters and Battery

1) Installation of Meters

When installing meters, select a place on the dash board ① where operator can watch them easily and they are not exposed to water spray.

The meters can be installed on the dash board ① of 2 to 11mm thick. When the thickness is over 11mm, cut fitting plate ② so that the meters can be installed.

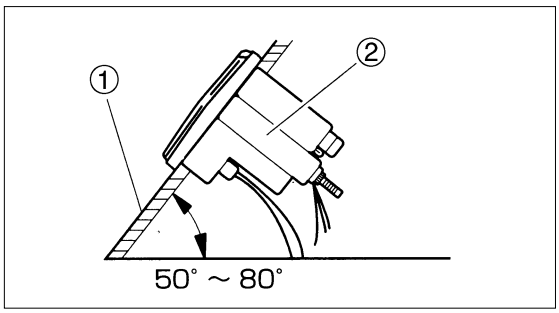

• Angle of Installation

Install meters so that the angle is in between 50 to 80 degrees from horizontal plane.

③ Large Sized Meters : Tachometer ③ and Speedometer
Installation Opening Diameter : 85mm (3-3/8 in)

④ Small Sized Meters : Trim Meter ⑤, Volt Meter, etc.
Installation Opening Diameter : 53mm (2-1/8 in)

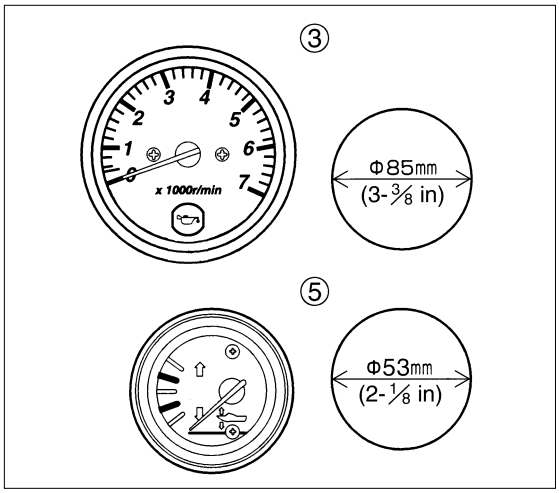

• Tachometer

Set selector ① to "12P" on the back of the meter.

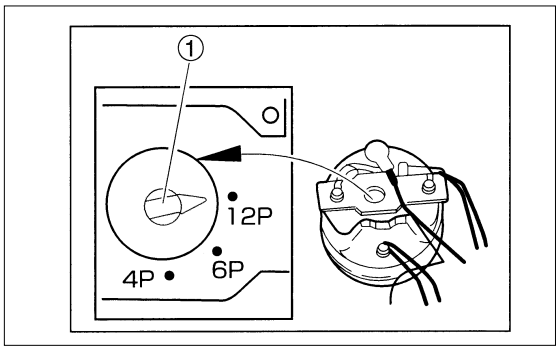

2) Installation of Battery

When using battery, select the one with capacity ranging from 12V 70AH (350CCA or 465MCA) to 12V 100AH(775CCA or 1000MCA at below freezing temperature).

① Battery should be stored in battery storage box and secured to hull to prevent it from falling due to rolling or pitching or any shock in the place where it is protected from water spray.

② When connecting battery cables, connect positive cable (red) and then negative cable (black). (Reverse the order when disconnecting.)

Positive cable is the one with red tube on the terminal end.

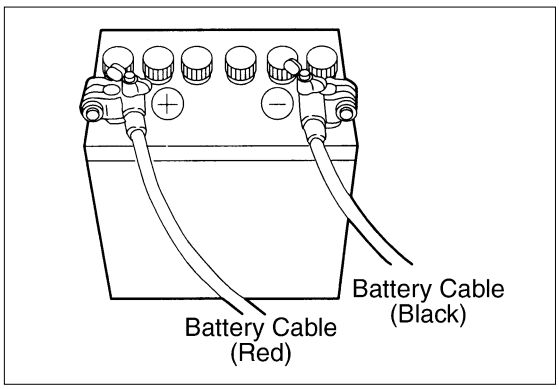

⚠ CAUTION

- **Before using battery, thoroughly read warning label.**
- **Do not disconnect battery cable during engine operation.**

3) Wiring Diagram of Remote and Control Meters

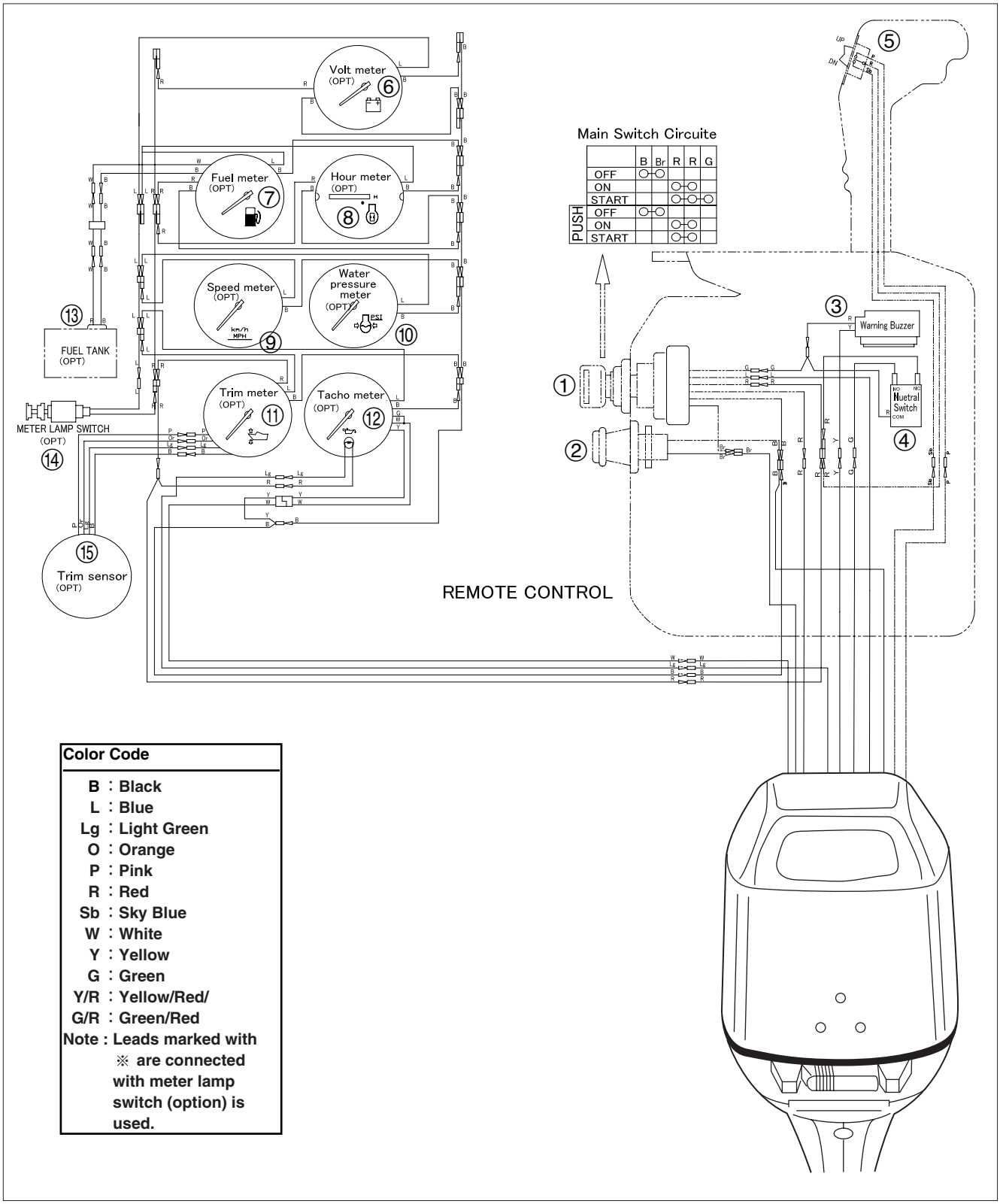

① Main Switch Key
② Stop Switch Key
③ Warning Buzzer
④ Neutral Switch
⑤ PTT Switch
⑥ Volt Meter
⑦ Fuel Meter
⑧ Hour Meter
⑨ Speedometer
⑩ Water Pressure Meter
⑪ Trim Meter
⑫ Tachometer
⑬ Fuel Tank Sensor
⑭ Meter Lamp Switch
⑮ Trim Sensor

3.Operation

1) Warning Indication

When an abnormality occurs on the engine, warning buzzer sounds and warning lamp is lit or blinks.

Take actions described below if abnormal state has occurred.

1. When engine started, warning lamp is lit for 5 seconds and warning buzzer operates for two seconds (generating intermittent sound) indicating that operation warning system is operating normally.

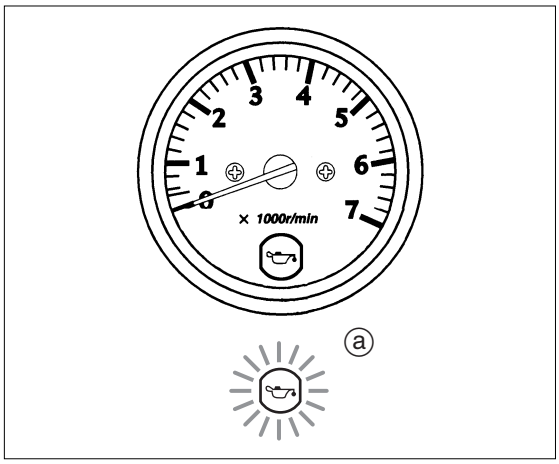

ⓐ Lamp is lit.

2. Overrevolution Prevention System (High Speed ESG)

   If engine load is reduced for some reason, the revolution speed may increase abnormally. In such case, warning buzzer operates (generating continuous sound), warning lamp is lit, and at the same time, high speed ESG operates to reduce the speed to 6,300r/min.

Sensor Detection Level	Speed Controlled to
Overrevolution	Approximately 6,300 r/min

3. Overheat Warning

   When engine cooling water temperature exceeds setting value during operation, warning buzzer operates (generating continuous sound), warning lamp is lit, and at the same time, low speed ESG operates to reduce the speed to 2,800r/min or less.

Sensor Detection Level	Speed Controlled to
Overheat	2,800 r/min

- Run immediately to safe place, and set throttle grip or control lever to slow. Set shift lever or control lever to neutral (N), check if cooling water check port discharges water, and then, stop engine. Remove plastic sheet or other matters that clogs water intake port, if any.
- The revolution control is cancelled when the engine temperature returns to normal state, and in throttle range of 2,800 r/min or over, the engine speed increases gradually.
- This warning is effective only for overheating, and not effective for combustion or lubrication.

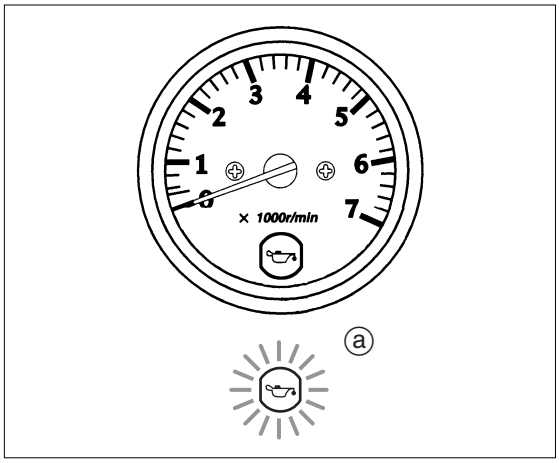

ⓐ Lamp is lit.

10

4. Oil Pressure Warning

When Oil pressure is reduced below setting value during operation, warning buzzer operates (generating continuous sound), warning lamp is lit, and at the same time, low speed ESG operates to reduce the speed to 2,800r/min or less.

- Reduce engine speed and run to safe place, set main switch key to "OFF" to stop engine, and then, check oil level and add oil if necesssary. After adding oil, start engine and check that warning lamp on the tachometer and bottom cowl is not lit and warning buzzer does not go on.
- Even after oil pressure returns to normal state, engine speed control for oil pressure cannot be cancelled unless engine is stopped.
- This warning is effective only for oil pressure detection at oil pressure switch section, and is not effective for overall oil pressure detection.

Sensor Detection Level	Speed Controlled to
Reduction of oil pressure	2,800 r/min

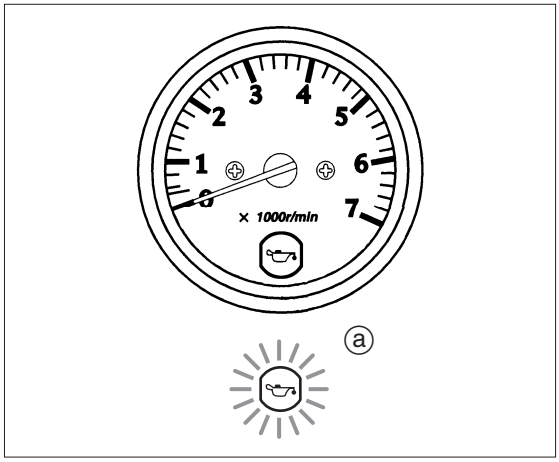

ⓐ Lamp is lit.

5. Engine Trouble Warning

When water temperature sensor or MAP (manifold pressure) sensor detects abnormality, warning lamp blinks, warning buzzer operates (generating intermittent sound), and at the same time, low speed ESG operates to reduce the speed to 2,800r/min or less

Sensor Detection Level	Speed Controlled to
Engine Trouble	2,800 r/min

- Engine revolution is reduced to 2,800r/min, warning lamp blinks and warning buzzer sounds (generating intermittent sound).
  1. Water temperature sensor defective
  2. MAP sensor defective
  3. Wire defective contact or disconnected
- Even after sensor returns to normal state, engine speed control for malfunction cannot be cancelled unless engine is stopped.

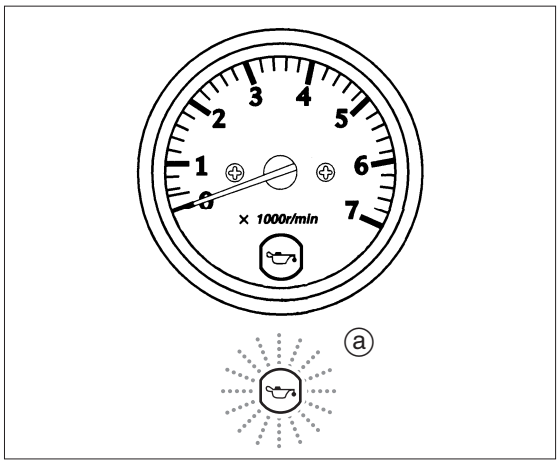

ⓐ Light blinks.

11

Wiring Diagram

1 **Wiring Chart** 11-2
2 **MF/MFG Model** 11-3
3 **EF/EFG/EFT Model** 11-4
4 **EP/EPG/EPT Model** 11-5

Wiring Diagram

NO.	Name	Remarks	ECU	Lead Wire Color				ECU
①	Flywheel	Magneto	–	–		–		–
②	Exciter Coils	Located in the alternator	A24	W/L	White/Blue	W/B	White/Black	A23
			A2	W/R	White/Red	–		–
③	ECU Charge Coil	Located in the alternator	A18	W	White	W	White	A19
④	Charge Coil	Located in the alternator	Ål	Y	Yellow	Y	Yellow	–
⑤	Pulser Coil	#1	A32	R/W	Red/White	B	Black	A15
⑥	Pulser Coils	#2	A33	R/Y	Red/Yellow	B	Black	Earth
⑦	Rectifier	Optional on the recoil starting model	–	Y	Yellow	R	Red	Battery
⑧	Fuse Holder	Optional on the recoil starting model	Battery	R	Red	R	Red	Battery
⑨	MAT Sensor	MAT	A14	G/W	Green/White	B/L	Black/Blue	A34
⑩	Water Temperature Sensor	WTS	A8	G/Y	Green/Yellow	B/L	Black/Blue	A34
⑪	Throttle Position Sensor	TPS	A7	L/W	Blue/White	R/L	Red/Blue	A17
⑫	MAP Sensor	MAP	A13	G/L	Green/Blue	R/L	Red/Blue	A17
⑬	Warning Lamp	LED	A10	Lg	Yellowish Green	W/R	White/Red	A1
⑭	Oil Pressure Switch		A5	Br/W	Brown/White	Earth		–
⑮	Stop Watch		A3	Br	Brown	B	Black	A28
⑯	Fuel Feed Pump	FFP	A22	L/B	Blue/Black	L	Blue	A1
⑰	Fuel Injector	#1	A29	Lg/R	Yellowish Green/Red	L	Blue	A1
⑱	Fuel Injector	#2	A30	Lg/B	Yellowish Green/Black	L	Blue	A1
⑲	Fuel Injector	#3	A31	Lg/L	Yellowish Green/Blue	L	Blue	A1
⑳	ISC Valve	Idle Speed Control Valve	A16	G/R	Green/Red	L	Blue	A1
㉑	Ignition Coil	#1	A25	B/W	Black/White	B	Black	Earth
㉒	Ignition Coil	#2	A26	B/Y	Black/Yellow	B	Black	Earth
㉓	Ignition Coil	#3	A27	B/G	Black/Green	B	Black	Earth
㉔	Spark Plugs	#1 to #3	–	High Tension Cable		Earth		–
㉕	ECU	Electronic Control Unit	–	–		–		–
㉖	ECU Connector	Main Harness		–		–		–
㉗	Service Connector	Diagnosis Port	–	–		–		–
㉘	Personal Computer	Diagnosis	–	9 Pin Serial Port		RS232C		–
㉙	Battery	This battery can also be used as the one of ㉞	Battery	R	Red	B	Black	A28
㉚	Cylinder Block	Earth	–	Earth		–		–
㉛	Bottom Cowl	Earth	–	Earth		–		–
㉜	Tachometer	with Warning Lamp	A12	W	White	Y	Yellow	–
	Warning Lamp	Located in the tachometer	A9	Lg	Yellowish Green	R	Red	A1
㉝	Warning Buzzer		A11	Y	Yellow	R	Red	–
㉞	Battery		Battery	R	Red	B	Black	A28
㉟	Starter Motor		Starter	B	Black	B	Black	Starter
㊱	Starter Solenoid		Starter	G	Green	R	Red	Battery
㊲	PTT Motor		–	L	Blue	G	Green	–
㊳	PTT Solenoid	UP side	–	Sb	Sky Blue	L	Blue	–
㊴	PTT Solenoid	DOWN side	–	P	Pink	G	Green	–
㊵	PTT Switch	Bottom Cowl	–	Sb	Sky Blue	P	Pink	–
㊶	Start Switch	Tiller Handle Model	Starter	G	Green	R	Red	Battery
㊷	Neutral Switch	Tiller Handle Model	Starter	G	Green	G	Green	Starter
㊸	Main Switch Key	Remote Control Model	Ignition	R	Red	G	Green	Starter
㊹	Stop Watch	Remote Control Model	A3	Br	Brown	B	Black	Earth
㊺	Warning Buzzer	Remote Control Model	A11	Y	Yellow	R	Red	Starter
㊻	Neutral Switch	Remote Control Model	Starter	G	Green	R	Red	Starter
㊼	PTT Switch	Remote Control Model	–	Sb	Sky Blue	P	Pink	–
㊽	Volt Meter	Option	Ignition	R	Red	B	Black	Earth
㊾	Fuel Meter	Option	–	W	White	B	Black	–
㊿	Hour Meter	Option	Ignition	R	Red	B	Black	Earth
(51)	Speedometer	Option	–	–		–		–
(52)	Water Pressure Meter	Option	–	–		–		–
(53)	Trim Meter	Option	–	P	Pink	Or	Orange	–
(54)	Fuel Tank Sensor	Option	–	R	Red	B	Black	–
(55)	Meter Lamp Switch	Option	–	L	Blue	R	Red	Ignition
(56)	Trim Sensor	Option	–	P	Pink	Or	Orange	–

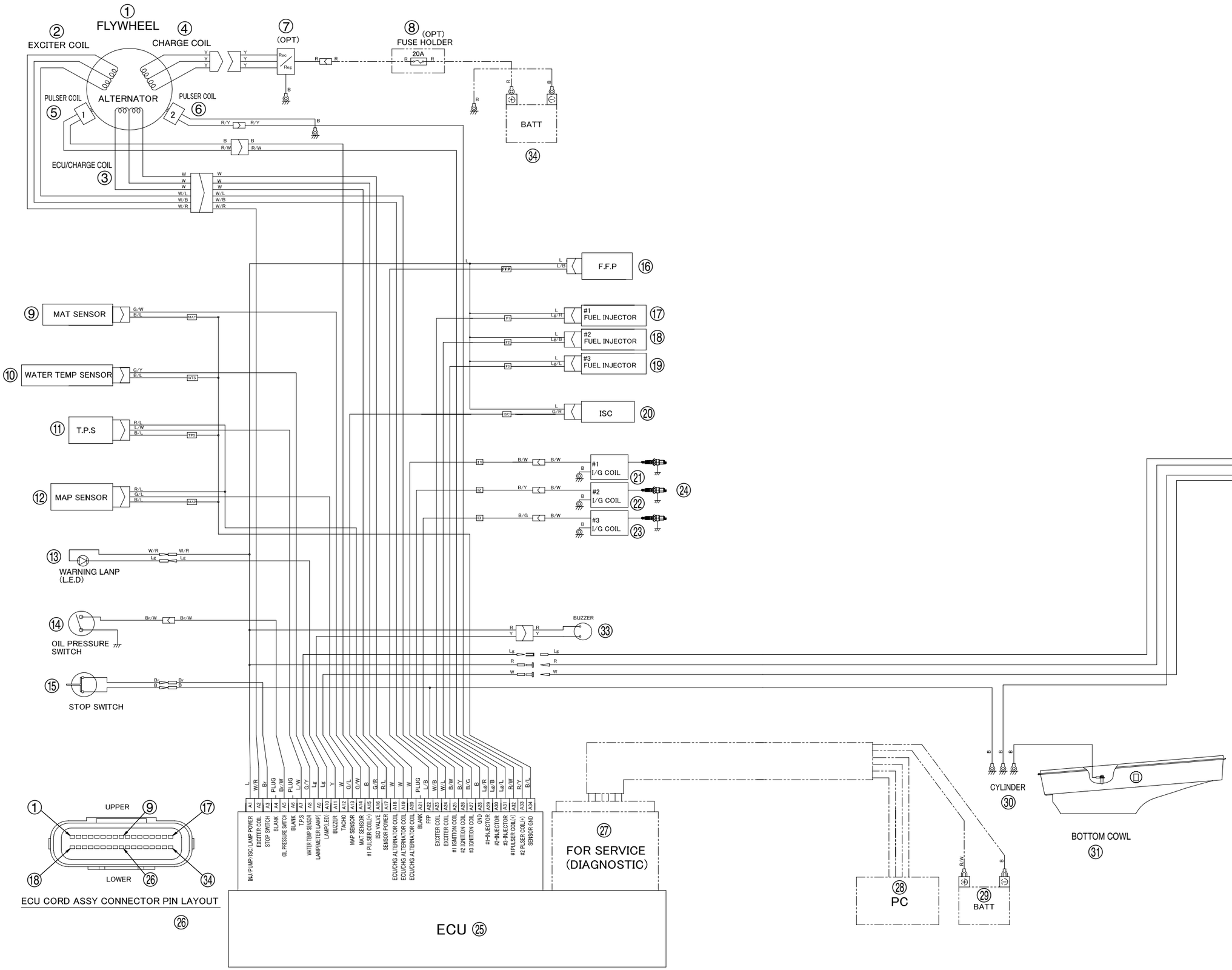
① FLYWHEEL
② EXCITER COIL
④ CHARGE COIL
⑦ (OPT)
Rec
Reg
⑧ (OPT) FUSE HOLDER
20A
ALTERNATOR
PULSER COIL ⑤
PULSER COIL ⑥
BATT ㉞
ECU/CHARGE COIL ③
F.F.P ⑯
⑨ MAT SENSOR
#1 FUEL INJECTOR ⑰
#2 FUEL INJECTOR ⑱
#3 FUEL INJECTOR ⑲
⑩ WATER TEMP SENSOR
ISC ⑳
⑪ T.P.S
#1 I/G COIL ㉑
#2 I/G COIL ㉒
#3 I/G COIL ㉓
㉔
⑫ MAP SENSOR
⑬ WARNING LANP (L.E.D)
⑭ OIL PRESSURE SWITCH
BUZZER ㉝
⑮ STOP SWITCH
(OPT)
Tacho meter ㉜
CYLINDER ㉚
BOTTOM COWL ㉛
㉗ FOR SERVICE (DIAGNOSTIC)
㉘ PC
㉙ BATT
ECU ㉕
UPPER
LOWER
ECU CORD ASSY CONNECTOR PIN LAYOUT ㉖

MF/MFG MODEL

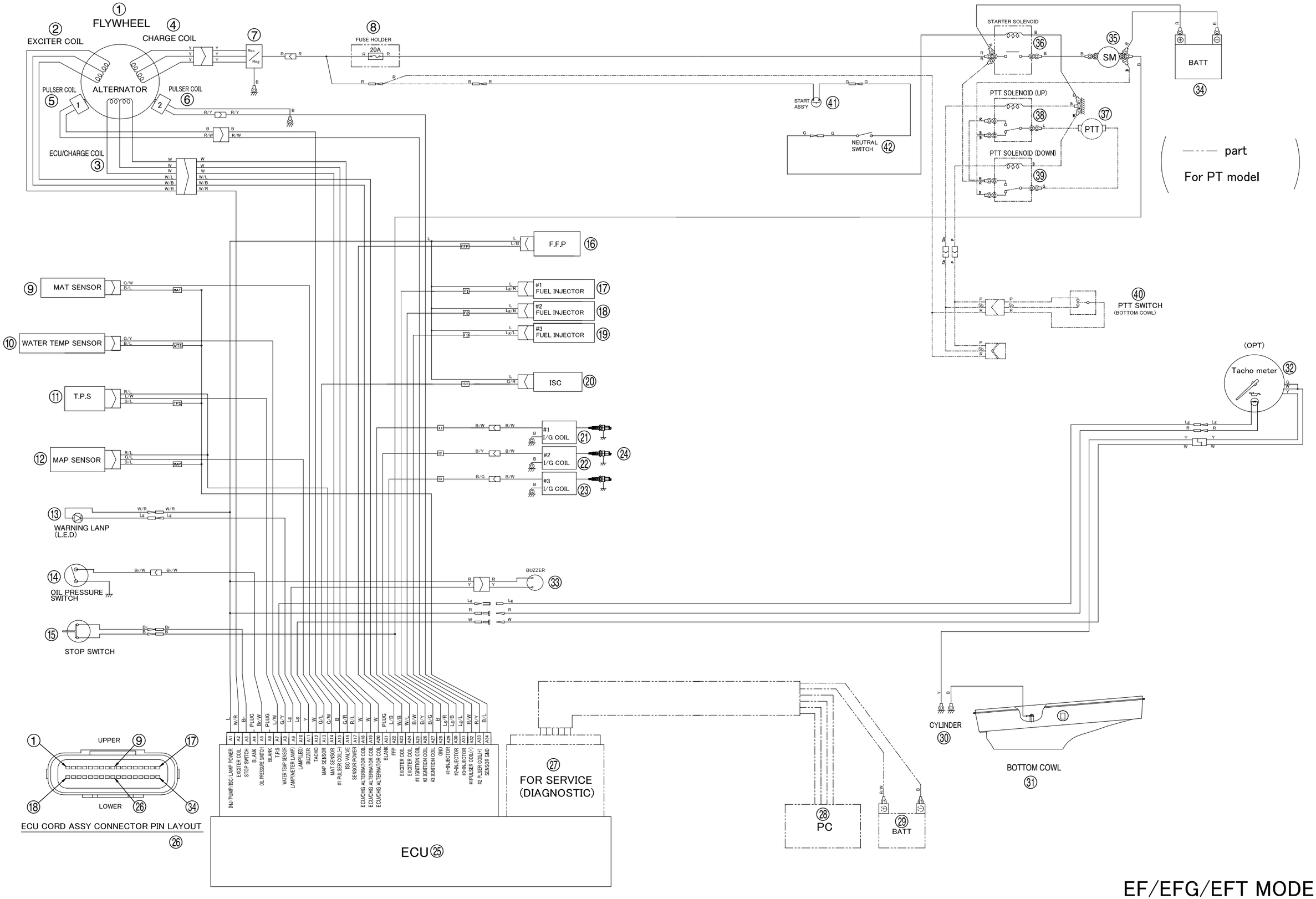

EF/EFG/EFT MODEL

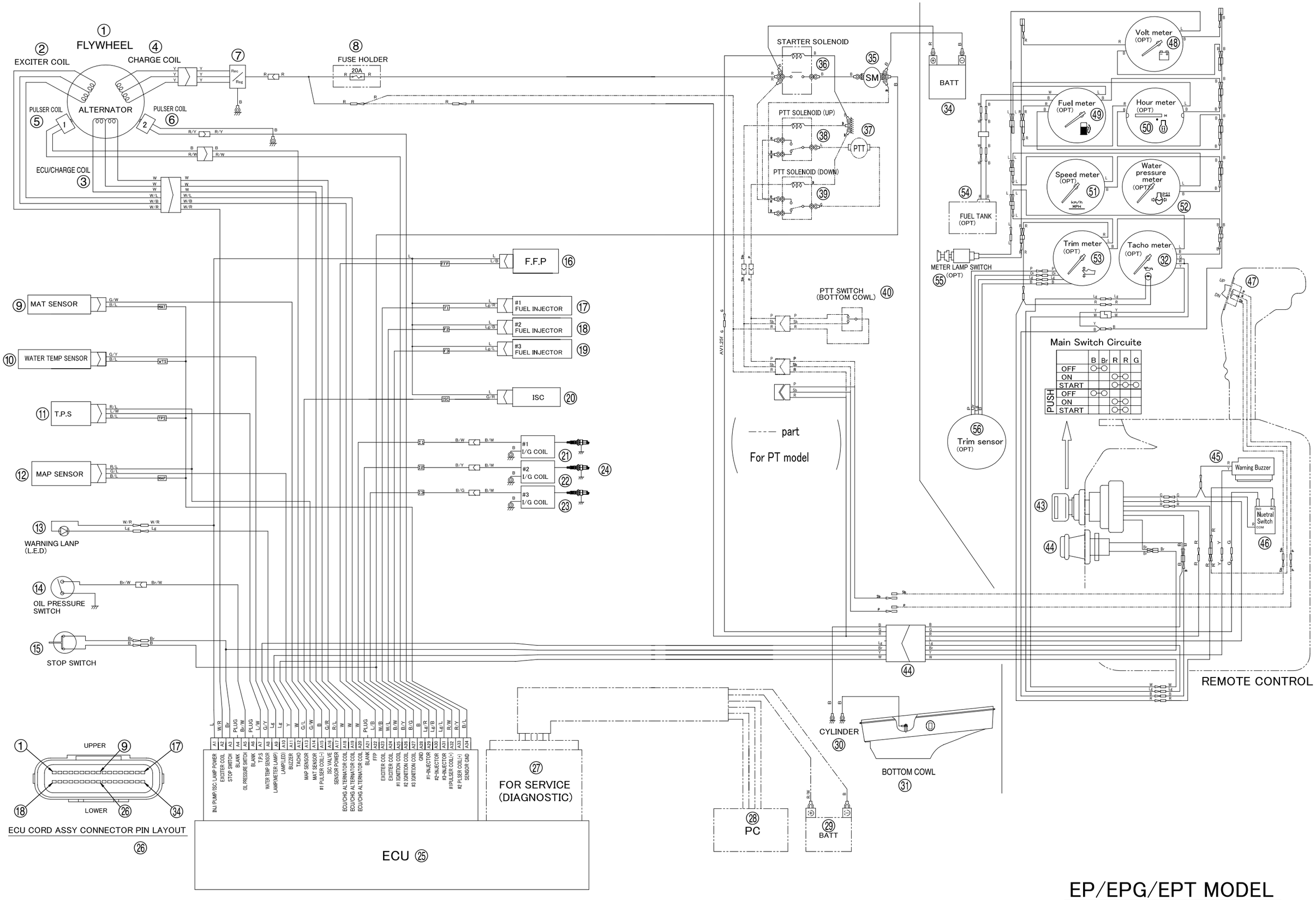

EP/EPG/EPT MODEL

TOHATSU
Outboards

SERVICE MANUAL

4 Stroke MFS 25/30B Models

TOHATSU CORPORATION

Address : 5-4, 3-chome, Azusawa, Itabashi-ku,
TOKYO, 174-0051 JAPAN
Phone : (03)3966-3116
FAX : (03)3966-0090
Home Page : http://www.tohatsu.co.jp

OB No.003-21054-1
06-02 NB-2600
Printed in Japan