2007 Service Manual

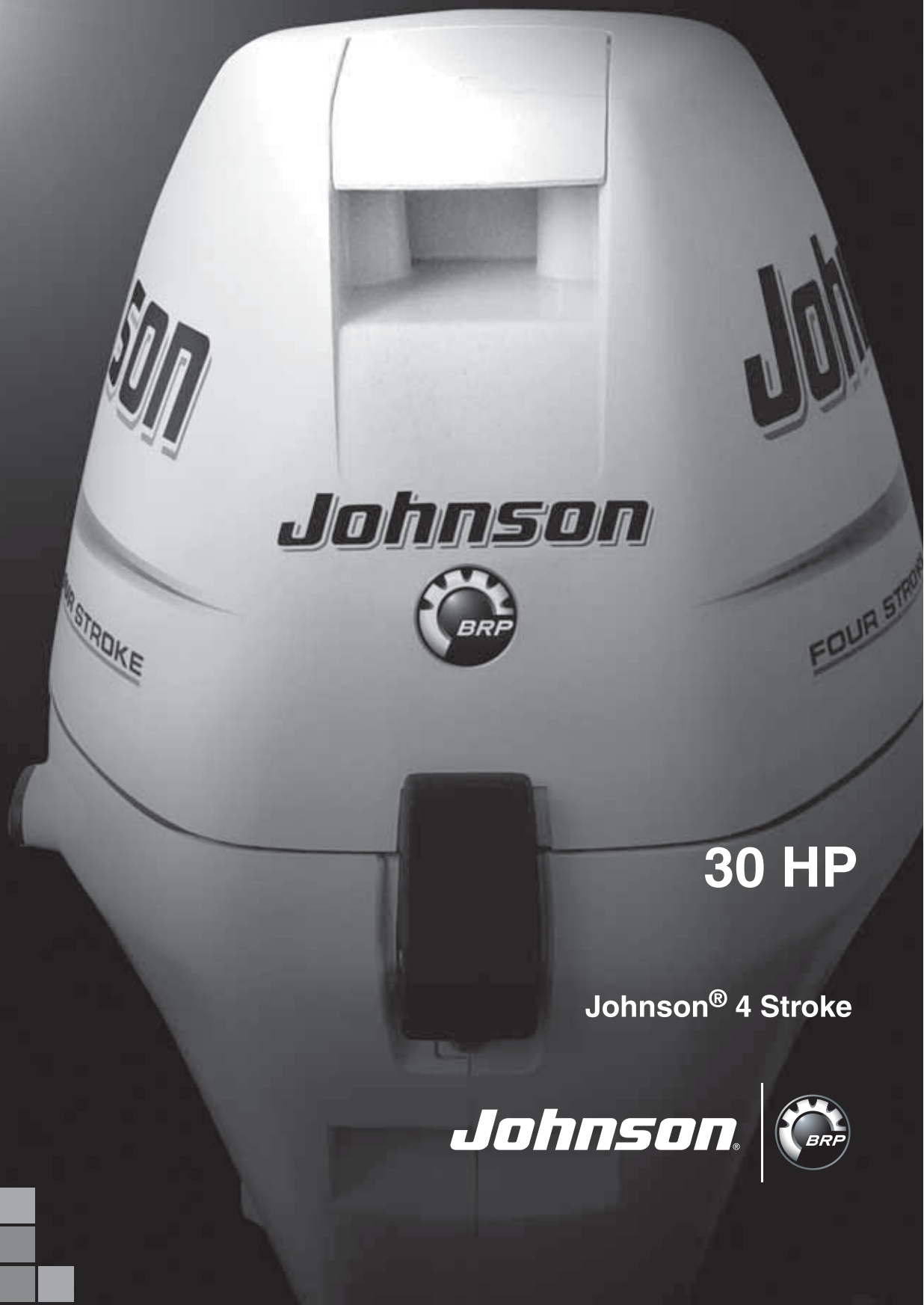

30 HP

Johnson® 4 Stroke

Johnson®

BRP US Inc.
Technical Publications
250 Sea Horse Drive
Waukegan, Illinois 60085 United States

† AMP, Superseal 1.5, Super Seal, Power Timer, and Pro-Crimper II are registered trademarks of Tyco International, Ltd.
† Amphenol is a registered trademark of The Amphenol Corporation.
† Champion is a registered trademark of Federal-Mogul Corporation.
† Deutsch is a registered trademark of The Deutsch Company.
† Dexron is a registered trademark of The General Motors Corporation.
† Fluke is a registered trademark of The Fluke Corporation
† Frahm is a registered trademark of James G. Biddle Co.
† Gasoila is a registered trademark of The Federal Process Corporation.
† GE is a registered trademark of The General Electric Company.
† GM is a registered trademark of The General Motors Corporation.
† Locquic and Loctite are registered trademarks of The Henkel Group.
† Lubriplate is a registered trademark of Fiske Brothers Refining Company.
† NGK is a registered trademark of NGK Spark Plugs (U.S.A.) Inc.
† NMEA is a registered trademark of the National Marine Electronics Association.
† Oetiker is a registered trademark of Hans Oetiker AG Maschinen.
† Packard is a registered trademark of Delphi Automotive Systems.
† Permatex is a registered trademark of Permatex.
† Plastigage is a registered trademark of The Dana Corporation.
† STP is a registered trademark of STP Products Company.
† Snap-on is a registered trademark of Snap-on Technologies, Inc.
† ThreeBond is a registered trademark of Three Bond Co., Ltd.

Bombardier logo is a registered trademark of Bombardier, Inc., used under license.

The following trademarks are the property of BRP US Inc. or its affiliates:

Carbon Guard™
DPL™ Lubricant
Evinrude ®
Evinrude ® *E-TEC*™
Evinrude ® / *Johnson* ® *XD30*™ Outboard Oil
Evinrude ® / *Johnson* ® *XD50*™ Outboard Oil
Evinrude ® / *Johnson* ® *XD100*™ Outboard Oil
Extreme Pressure Grease™
FasTrak™
Gel-Seal II™
Hi-Vis™ Gearcase Lubricant
Johnson ®
Moly Lube™
Nut Lock™
QuikStart™
S.A.F.E.™
S.L.O.W.™
Screw Lock™
SystemCheck™
Triple-Guard ® Grease
Twist-Grip™
2+4 ® *Fuel Conditioner*
Ultra™ *4-Stroke* Outboard Oil
HPF XR™ Gearcase Lubricant
Ultra Lock™

Printed in the United States.
© 2006 BRP US Inc. All rights reserved.
TM, ® Trademarks and registered trademarks of Bombardier Recreational Products Inc. or its affiliates.

SAFETY INFORMATION

Before working on any part of the outboard, read the SAFETY section at the end of this manual.

This manual is written for qualified, factory-trained technicians who are already familiar with the use of *Evinrude®/Johnson®* Special Tools. This manual is not a substitute for work experience. It is an organized guide for reference, repair, and maintenance of the outboard(s).

This manual uses the following signal words identifying important safety messages.

⚠ DANGER ⚠

Indicates an imminently hazardous situation which, if not avoided, WILL result in death or serious injury.

⚠ WARNING ⚠

Indicates a potentially hazardous situation which, if not avoided, CAN result in severe injury or death.

⚠ CAUTION ⚠

Indicates a potentially hazardous situation which, if not avoided, MAY result in minor or moderate personal injury or property damage. It also may be used to alert against unsafe practices.

IMPORTANT: Identifies information that will help prevent damage to machinery and appears next to information that controls correct assembly and operation of the product.

These safety alert signal words mean:

ATTENTION!
BECOME ALERT!
YOUR SAFETY IS INVOLVED!

Always follow common shop safety practices. If you have not had training related to common shop safety practices, you should do so to protect yourself, as well as the people around you.

It is understood that this manual may be translated into other languages. In the event of any discrepancy, the English version shall prevail.

To reduce the risk of personal injury, safety warnings are provided at appropriate times throughout the manual.

DO NOT make any repairs until you have read the instructions and checked the pictures relating to the repairs.

Be careful, and never rush or guess a service procedure. Human error is caused by many factors: carelessness, fatigue, overload, preoccupation, unfamiliarity with the product, and drugs and alcohol use, to name a few. Damage to a boat and outboard can be fixed in a short period of time, but injury or death has a lasting effect.

When replacement parts are required, use *Evinrude/Johnson Genuine Parts* or parts with equivalent characteristics, including type, strength and material. Using substandard parts could result in injury or product malfunction.

Torque wrench tightening specifications must be strictly followed. Replace any locking fastener (locknut or patch screw) if its locking feature becomes weak. Definite resistance to turning must be felt when reusing a locking fastener. If replacement is specified or required because the locking fastener has become weak, use only authorized *Evinrude/Johnson Genuine Parts.*

If you use procedures or service tools that are not recommended in this manual, YOU ALONE must decide if your actions might injure people or damage the outboard.

DANGER

Contact with a rotating propeller is likely to result in serious injury or death. Assure the engine and prop area is clear of people and objects before starting engine or operating boat. Do not allow anyone near a propeller, even when the engine is off. Blades can be sharp and the propeller can continue to turn even after the engine is off. Remove propeller before servicing and when running the outboard on a flushing device.

DO NOT run the engine indoors or without adequate ventilation or permit exhaust fumes to accumulate in confined areas. Engine exhaust contains carbon monoxide which, if inhaled, can cause serious brain damage or death.

WARNING

Wear safety glasses to avoid personal injury, and set compressed air to less than 25 psi (172 kPa).

The motor cover and flywheel cover are machinery guards. Use caution when conducting tests on running outboards. DO NOT wear jewelry or loose clothing. Keep hair, hands, and clothing away from rotating parts.

During service, the outboard may drop unexpectedly. Avoid personal injury; always support the outboard's weight with a suitable hoist or the tilt support bracket during service.

To prevent accidental starting while servicing, disconnect the battery cables at the battery. Twist and remove all spark plug leads.

The electrical system presents a serious shock hazard. DO NOT handle primary or secondary ignition components while outboard is running or flywheel is turning.

Gasoline is extremely flammable and highly explosive under certain conditions. Use caution when working on any part of the fuel system.

Protect against hazardous fuel spray. Before starting any fuel system service, carefully relieve fuel system pressure.

Do not smoke, or allow open flames or sparks, or use electrical devices such as cellular phones in the vicinity of a fuel leak or while fueling.

Keep all electrical connections clean, tight, and insulated to prevent shorting or arcing and causing an explosion.

Always work in a well ventilated area.

Replace any locking fastener (locknut or patch screw) if its locking feature becomes weak. Definite resistance to tightening must be felt when reusing a locking fastener. If replacement is indicated, use only authorized replacement or equivalent.

TABLE OF CONTENTS

SECTION . . . . . PAGE
INTRODUCTION 5
1 SERVICE SPECIFICATIONS AND SPECIAL TOOLS . . 15
2 INSTALLATION AND PREDELIVERY 29
3 MAINTENANCE 51
4 ENGINE CONTROL 69
5 ELECTRICAL 83
6 FUEL SYSTEM 99
7 POWERHEAD 117
8 MIDSECTION 173
9 GEARCASE 195
10 POWER TRIM AND TILT 225
11 WIRE AND HOSE ROUTING 243
SAFETY S–1

INTRODUCTION

CONTENTS

MODELS COVERED IN THIS MANUAL 6
IDENTIFYING MODEL AND SERIAL NUMBERS 6
MODEL DESIGNATION 7
TYPICAL PAGE – A 8
TYPICAL PAGE – B 9
TYPICAL PAGE – C 10
TYPICAL PAGE – D 11
ABBREVIATIONS USED IN THIS MANUAL 12
UNITS OF MEASUREMENT 12
LIST OF ABBREVIATIONS 12
PRODUCT REFERENCE AND ILLUSTRATIONS 13
SYMBOLS 13
ELECTRICAL 13
VALUES 14

MODELS COVERED IN THIS MANUAL

This manual covers service information on *Johnson* 30 HP 4-stroke models. Use this manual together with the proper Parts Catalog for part numbers and for exploded views of the outboard, which are a valuable aid to disassembly and reassembly.

This manual presents the U.S. values and dimensions first and the metric values and dimensions second, inside parentheses ( ).

Model Number	Start	Shaft	Steering
J30TEL4SUA	Electric	20in.	Tiller
J30PL4SUA	Electric	20in.	Remote

Identifying Model and Serial Numbers

Outboard model and serial numbers are located on the swivel bracket and on the powerhead.

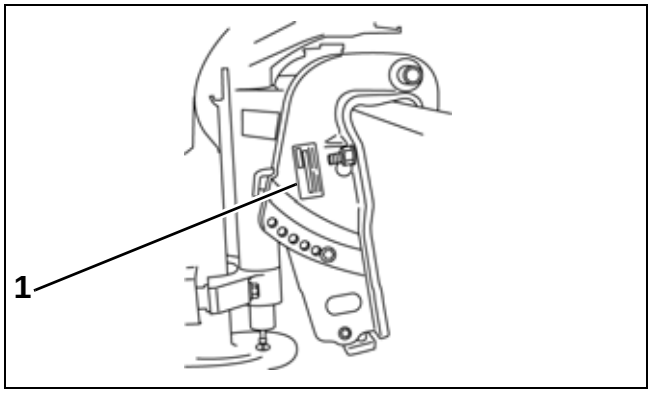

30 HP Swivel Bracket 001968
1. Model and serial number

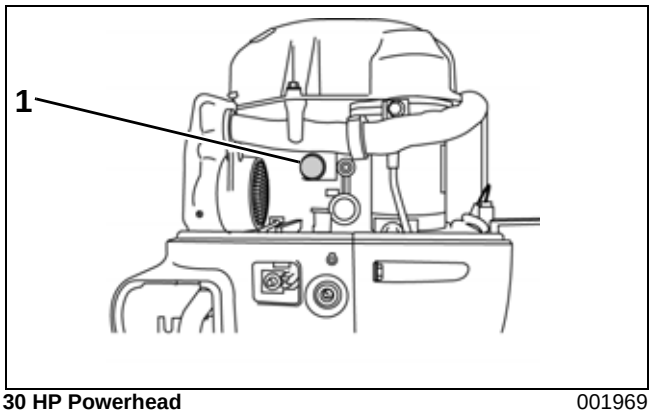

30 HP Powerhead 001969
1. Serial number

MODEL DESIGNATION

STYLE:
J = Johnson
E = Evinrude

LENGTH:
L = 20” Long

PREFIX | **HORSEPOWER** | **4-STROKE** | **MODEL RUN or SUFFIX**

B J 30 P L 4 SU A

DESIGN FEATURES:
AP = Advanced Propulsion
B = Blue Paint
C = Counter Rotation
D = Evinrude E-TEC™
E = Electric Start w/Remote Steering
F = Direct-Injection
G = Graphite Paint
H = High Output
J = Jet Drive
M = Military
P = Power Trim and Tilt
R = Rope Start w/Tiller Steering
S = Saltwater Edition
T = Tiller Steering
TE = Tiller Electric
V = White Paint
W = Commercial Model

MODEL YR:
I = 1
N = 2
T = 3
R = 4
O = 5
D = 6
U = 7
C = 8
E = 9
S = 0
Ex: SU = 2007

TYPICAL PAGE – A

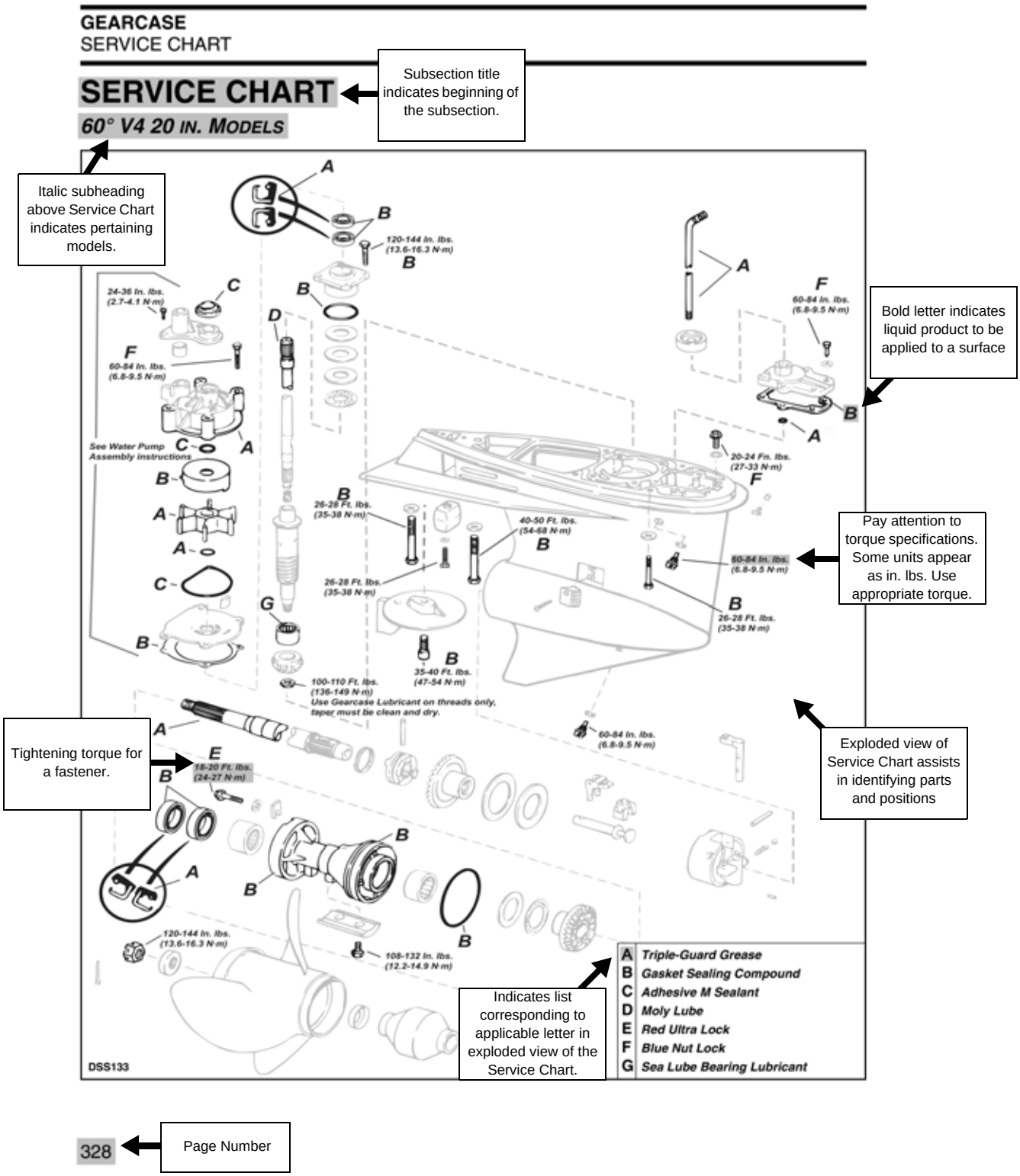

TYPICAL PAGE – B

Section Title → **INSTALLATION AND PREDELIVERY**
Subsection Title → OUTBOARD RIGGING PROCEDURE

Cable, Hose, and Wire Routing

Route all hoses, control cables, and wiring through a protective sleeve or conduit into the boat and through the grommet.

Refer to the following diagram to ensure proper positioning of rigging components in grommet.

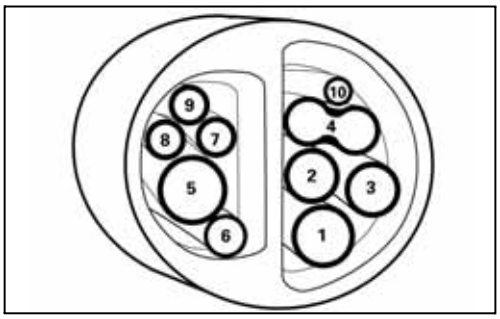

000084

1. *Fuel supply hose*
2. *Oil return hose*
3. *Oil supply hose*
4. *Battery cables*
5. *Main wire harness (MWS)*
6. *Throttle cable*
7. *Shift cable*
8. *Oil tank sending unit harness*
9. *Water pressure hose*
10. *Accessory charge wire*

Model specific illustrations designated with image captions

Connect outboard main wire harness to boat main wire harness.

Before installing electrical connectors, check that the seal is in place. Clean off any dirt from connectors. Apply a light coat of *Electrical Grease™* to the seal. Push connectors together until latched.

Products and lubricants italicized

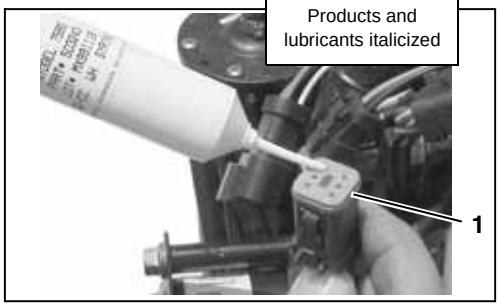

1. *Seal*

DP0824

If a water pressure gauge is to be used, install the water pressure hose fitting in the cylinder block. Use *Pipe Sealant with Teflon* (P/N 910048) on the threads of the hose fitting. Refer to installation instructions supplied with gauge.

Route the water pressure hose through cover grommet with oil tank sending unit harness. Route hose along battery cables toward the back of the powerhead. Use tie straps to fasten in place.

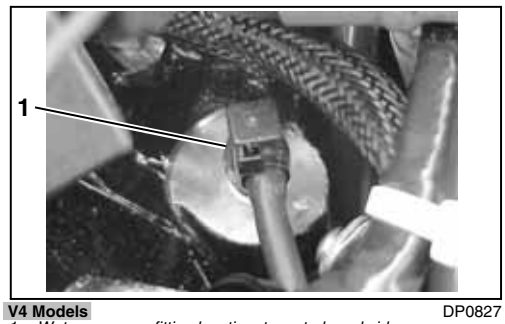

V4 Models DP0827

1. *Water pressure fitting location: top, starboard side of cylinder/crankcase assembly, below throttle position sensor.*

V6 Models DP0828

1. *Water pressure fitting location: rear of cylinder/crankcase assembly*

If temperature gauge is to be used, route sending unit wire through grommet with hose for water pressure gauge. Follow the path of battery cables. Provide adequate length to reach cylinder head. Refer to installation instructions supplied with gauge.

2

TYPICAL PAGE – C

POWERHEAD
INSTALLATION

IMPORTANT: The motor mount, washer, and screw are serviced as an assembly. Do not disassemble.

Denotes necessary step or information to prevent damage or control correct procedure

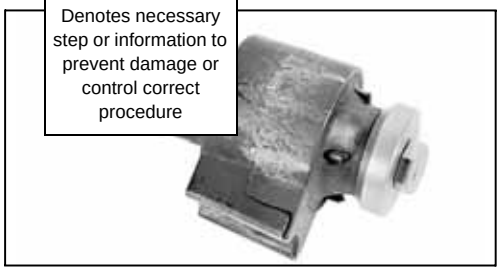

39820

Installation

Place mount assemblies in position, with flats facing away from each other.

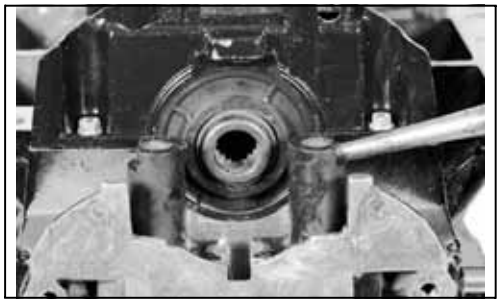

49557

Apply *Extreme Pressure Grease* to all sides of retainer and install between mounts.

Apply *Nut Lock* to retainer screw, install the screw, and torque to 15 to 20 ft. lbs. (20 to 27 N·m).

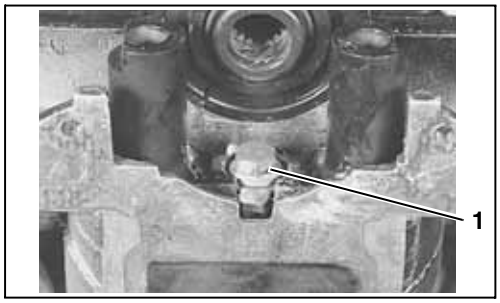

1. Mount retainer screw 49556

INSTALLATION

Title in italics indicates a procedure concerning a particular model

V4 MODELS

Install base gasket d ***rmatex No. 2*** **or** ***Gasket Seali***

Title indicates the procedure specific to V4 Models is finished. From this point, this particular procedure concerns V6 Models.

V6 MODELS

Apply *Permatex No.* inner exhaust housing flange a new base gasket with *Gask d.*

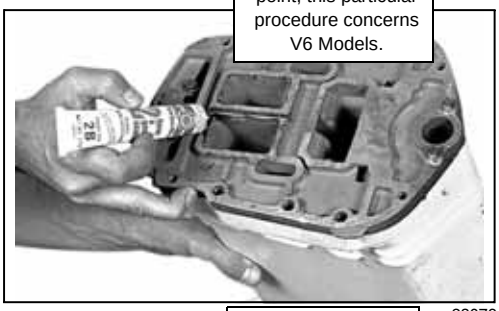

23079

Title indicates from this point, All Models are concerned

ALL MODELS

Install a **new** base ga ensure proper sealing, mating surfaces must be clean and free of oil, grease, and foreign matter.

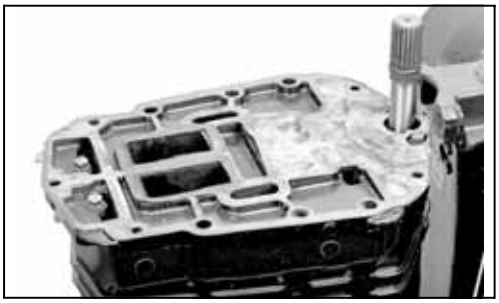

23497

Coat the driveshaft splines with *Moly Lube*. Do not apply lubricant to end of driveshaft.

TYPICAL PAGE – D

Two pulse hoses connect the pump to pulse fittings on the front of the cylinder/crankcase.

- **V4 Models –** cylinders 1 and 3
- **V6 Models –** cylinders 1 and 4

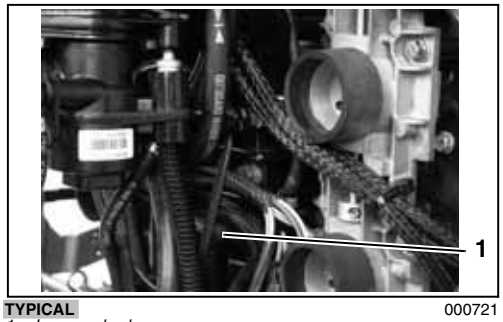

TYPICAL 000721
1. Lower pulse hose

Typical illustration for lower pulse hose of V4 or V6 Models

ctor-Manifold

ctor-manifold distributes the oil sup- e oil lift pump. A pressure-sensing switch monitors oil injection pressure.

Oil Injector-Manifold Components

- 40 V oil injector
- Oil distribution manifold
- Oil pressure switch
- Pressure regulator (oil return hose)
- Oil distribution hoses
- Oil to fuel check valve

Cross references direct readers to related topics

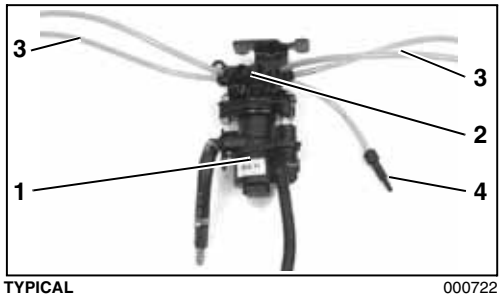

TYPICAL 000722
1. Oil injector
2. Oil distribution manifold
3. Oil distribution hoses
4. Oil to fuel check valve

Oil Pressure Switch

The oil pressure switch is located in the oil injector-manifold and reacts to changes in oil manifold pressure. The *EMM* supplies and monitors electrical current to the switch.

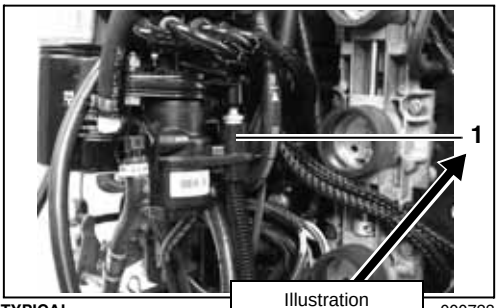

TYPICAL 000723
1. Oil pressure switch

Illustration components numbered to correspond to image

The switch opens or clo llowing oil manifold pressures:

53 psi (365 kPa) (nominal) to close
43 psi (296 kPa) (nominal) to reopen

Refer to **Oil Pressure Switch Test** on p. 224.

Service Code 38

A faulty electrical circuit or an inoperative pressure switch activates service code 38 (no oil sensor feedback or lack of oil pressure) and the *EMM*:

Activates the *System Check* "NO OIL" light
Stores a service code
Initiates *S.L.O.W.*

Service Code 39

If no oil pressure is detected during startup, the *EMM* initiates an oil injector “recovery mode” to pressurize the system. If inadequate oil pressure is still detected after the recovery mode is completed, the *EMM*:

Activates the *System Check* "NO OIL" light
Stores a service code
Initiates *S.L.O.W.*

8

Section tabs allow for quicker reference when thumbing through manual

ABBREVIATIONS USED IN THIS MANUAL

Units of Measurement

A	Amperes
amp-hr	Ampere hour
fl. oz.	fluid ounce
ft. lbs.	foot pounds
HP	horsepower
in.	inch
in. Hg	inches of mercury
in. lbs.	inch pounds
kPa	kilopascals
ml	milliliter
mm	millimeter
N·m	Newton meter
P/N	part number
psi	pounds per square inch
RPM	revolutions per minute
°C	degrees Celsius
°F	degrees Fahrenheit
ms	milliseconds
µs	microseconds
Ω	Ohms
V	Volts
VAC	Volts Alternating Current
VDC	Volts Direct Current

List of Abbreviations

ABYC	American Boat & Yacht Council
ATDC	after top dead center
AT	air temperature sensor
BPS	barometric pressure sensor
BTDC	before top dead center
CCA	cold cranking amps
CPS	crankshaft position sensor
DI	Direct-Injection
ECU	electronic control unit
EMM	engine management module
ICOMIA	International Council of Marine Industry Associations
MCA	marine cranking amps
MWS	modular wiring system
NMEA	National Marine Electronics Assoc.
NTC	negative temperature coefficient
PDP	power distribution panel
PTC	positive temperature coefficient
ROM	read only memory
S.A.F.E.™	speed adjusting failsafe electronics
SAC	start assist circuit
SAE	Society of Automotive Engineers
S.L.O.W.™	speed limiting operational warning
SYNC	synchronization
TDC	top dead center
TPS	throttle position sensor
WOT	wide open throttle
WTS	water temperature sensor

PRODUCT REFERENCE AND ILLUSTRATIONS

BRP US Inc. reserves the right to make changes at any time, without notice, in specifications and models and also to discontinue models. The right is also reserved to change any specifications or parts, at any time, without incurring any obligation to equip same on models manufactured prior to date of such change. Specifications used are based on the latest product information available at the time of publication.

The continuing accuracy of this manual cannot be guaranteed.

All photographs and illustrations used in this manual may not depict actual models or equipment, but are intended as representative views for reference only.

Certain features or systems discussed in this manual might not be found on all models in all marketing areas.

All service technicians must be familiar with nautical orientation. This manual often identifies parts and procedures using these terms.

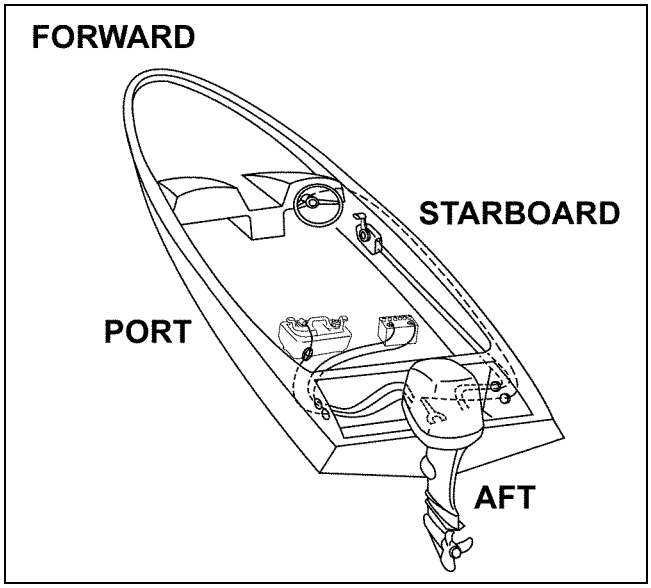

Nautical Orientation

SYMBOLS

Throughout this service manual, symbols are used to interpret electrical troubleshooting results or to assign values in drawings.

Electrical

When "∞" shows on the meter face, no continuity, or very high resistance, is indicated. The symbol is referred to as infinity.

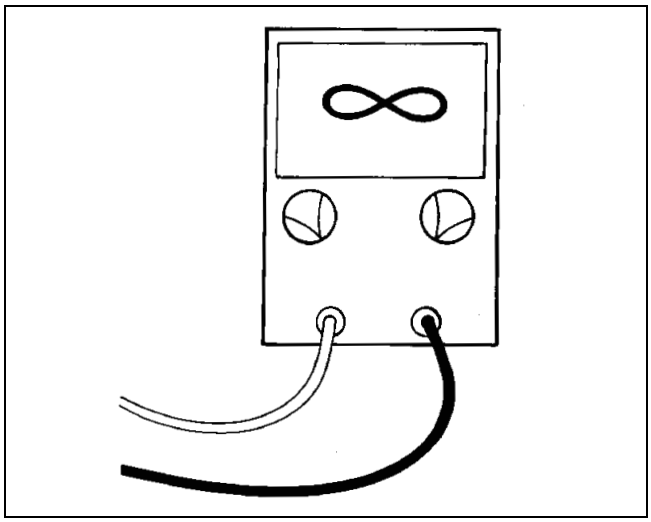

DR4203

When "V" follows a value on the meter face, the procedure is measuring voltage.

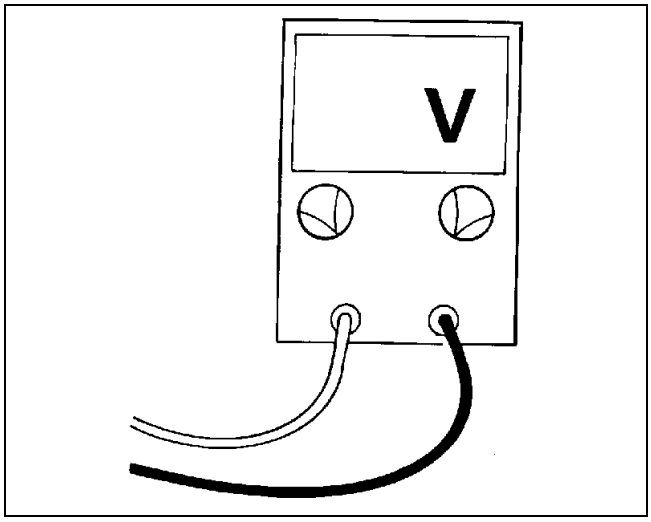

DR4204

When "Ω" follows a value on the meter face, the procedure is measuring resistance. Ω is the symbol for ohm, the unit of measurement for resistance.

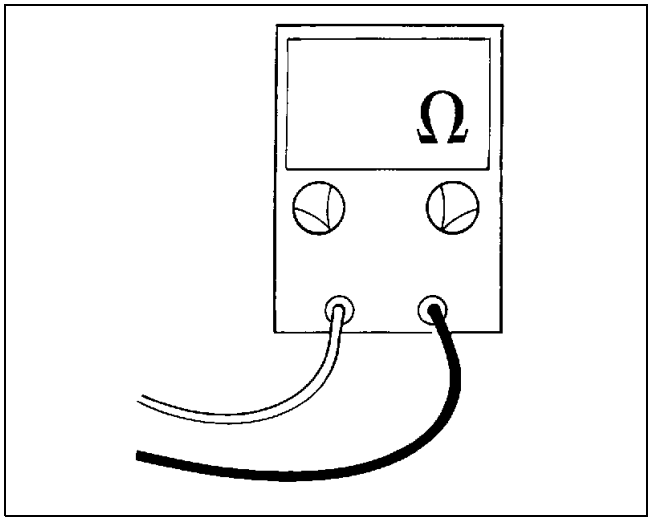

DR4205

Values

When "≤" precedes a value on the meter face, the reading should be less than, or equal to, the value shown.

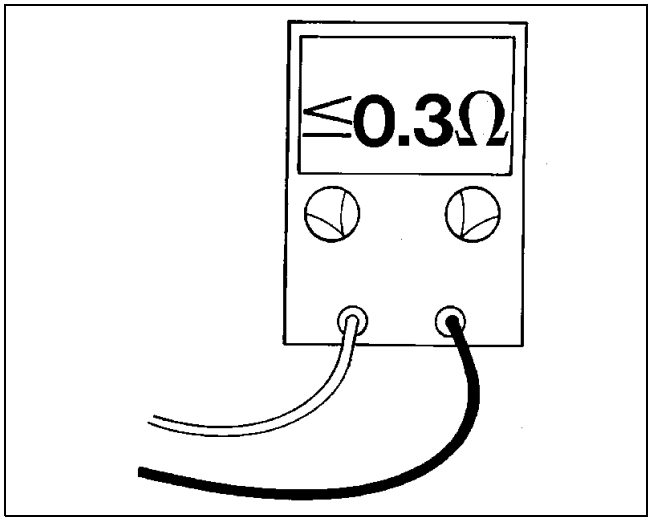

DR4206

When "≥" precedes a value on the meter face, the reading should be greater than, or equal to, the value shown.

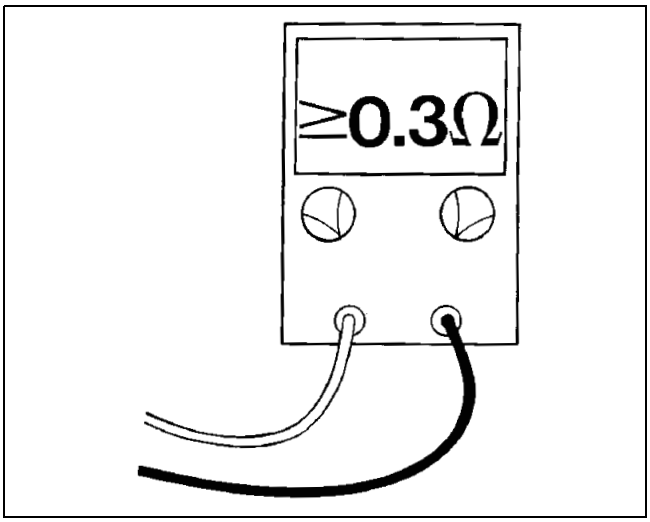

DR4207

SERVICE SPECIFICATIONS AND SPECIAL TOOLS

TABLE OF CONTENTS

TECHNICAL DATA 18
STANDARD TORQUE SPECIFICATIONS 20
SPECIAL TOOLS 21
ELECTRICAL / IGNITION 21
FUEL 22
GEARCASE 22
POWERHEAD 24
UNIVERSAL 26
SHOP AIDS 27
NOTES 30

TECHNICAL DATA

	HP	30
ENGINE	Full Throttle Operating Speed	5500-6100 RPM
	Power	30 HP (22.1 kw) @ 6100 RPM
	Idle Speed (in-gear)	900 ± 50 RPM
	Weight (without engine oil)	**Remote Models:** 212 lbs. (96 kg) **TEL Models:** 216 lbs. (98 kg)
	Lubrication	**For initial 10 hour break-in:** *Evinrude/Johnson* 4-Stroke Oil, P/N 775597 **After break-in:** *Evinrude/Johnson* Ultra 4-Stroke Oil, P/N 775594
	Engine Type	Four-stroke, three-cylinder SOHC
	Displacement	36.4 cu. in. (597 cm^3)
	Bore	2.56 in. (65 mm)
	Stroke	2.36 in. (60 mm)
	Standard Bore	2.5591 to 2.5598 in. (65.000 to 60.020 mm) To bore oversize, add piston oversize dimension to standard bore.
	Crankshaft Journal	1.5741 to 1.5748 in. (39.982 to 40.000 mm)
	Rod Crankpin	1.4166 to 1.4173 in. (35.982 to 36.000 mm)
	Valve Clearance (cold engine)	0.005 to 0.007 in. (0.13 to 0.17 mm)
	Compression Ring End Gap	**Top:** 0.005 to 0.011 in. (0.12 to 0.27 mm) **2nd:** 0.014 to 0.020 in. (0.35 to 0.50 mm)
	Piston-to-Cylinder Bore Clearance	0.004 in. (0.10 mm) maximum
	Test Propeller	P/N 5032468 (also requires bushing, P/N 5034620, and stopper, P/N 5034621)
FUEL	Carburetion	Three single-throat carburetor, float feed
	Calibration	Adjustable low speed; Fixed intermediate and high speed
	Starting Enrichment	**TEL Models:** Manual choke **Remote Models:** Choke solenoid
	Carburetor Float Height	0.575 ± 0.040 in. (14.6 ± 1 mm)
	Preferred Fuel	Regular unleaded
	Acceptable Fuel	Any of the above gasolines with 10% Ethanol or 5% Methanol with 5% co-solvents
	Minimum Octane	87 AKI (R+M)/2 or 90 (RON)
	Additives	*2+4 Fuel Conditioner*, *Fuel System Cleaner, Carbon Guard* Use only BRP recommended fuel additives. The use of other additives may result in engine damage.

	HP	30	
ELECTRICAL	Battery, Minimum Recommendation	12-Volt, 360 CCA (465 MCA) with 90 Minutes Reserve Capacity or 50 Ampere-Hour	
	Engine Fuse (25 Amp)	P/N 5031911	
	Charge Coil Output	15 Amperes	
COOLING	Type	Auto Pressure-Temperature Controlled	
	Thermostat opens	143°F (62°C)	
IGNITION	Type	Magneto Powered Capacitor Discharge	
	RPM Limit	6300	6500
	Spark Plugs	NGK-DCPR6E @ 0.030 in. (0.8 mm)	
	Ignition Coil	P/N 5032035	
GEARCASE	Gear Ratio	11:23 (2.09)	
	Lubricant	*HPF XR Gearcase Lubricant*	
	Capacity	8 fl. oz. (230 ml)	

STANDARD TORQUE SPECIFICATIONS

Standard Torque Chart

Size	In. Lbs.	Ft. Lbs.	N·m
No. 6	7–10	0.58–0.83	0.8–1.1
No. 8	15–22	1.25–1.83	1.7–2.5
No. 10	24–36	2–3	2.7–4.0
No. 12	36–48	3–4	4.0–5.4
1/4 in.	60–84	5–7	6.7-9.4
5/16 in.	120–144	10–12	13.5–16.2
3/8 in.	216–240	18–20	24.4–27.1
7/16 in.	336–384	28–32	37.9–43.4

IMPORTANT: These values apply only when a specific torque for a specific fastener is not listed in the appropriate section. When tightening two or more screws on the same part, DO NOT tighten screws completely, one at a time.

WARNING

Torque wrench tightening specifications must be strictly adhered to. Replace any locking fastener (locknut or patch screw) if its locking feature becomes weak. Definite resistance to turning must be felt when reusing a locking fastener.

If replacement is specified or required because the locking fastener has become weak, use only authorized *Evinrude/ Johnson Genuine Parts*.

SPECIAL TOOLS

Electrical / Ignition

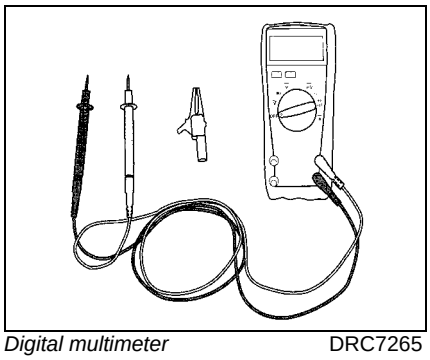

Digital multimeter DRC7265
Ohms resolution 0.01
Purchase through local supplier

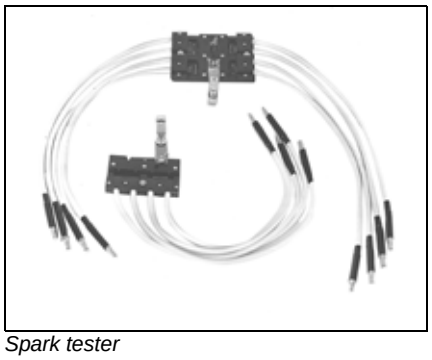

Spark tester
P/N 508118

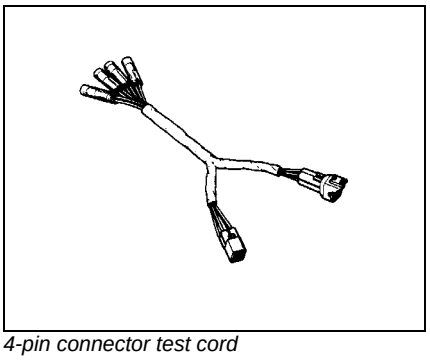

4-pin connector test cord
P/N 5034228

CD Peak reading voltmeter
P/N 507972

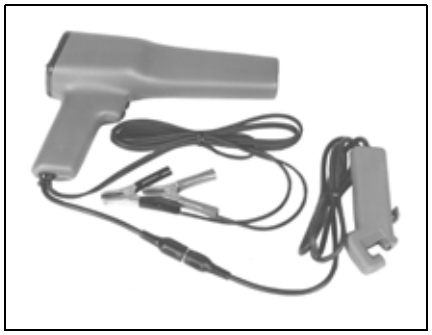

Tachometer/timing light
P/N 507980

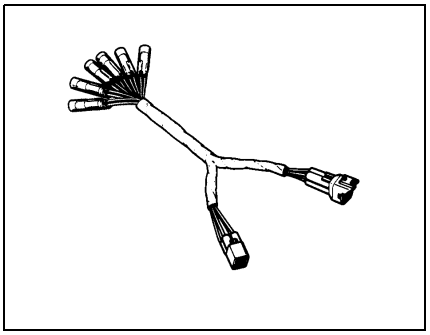

6-pin connector test cord
P/N 5034618

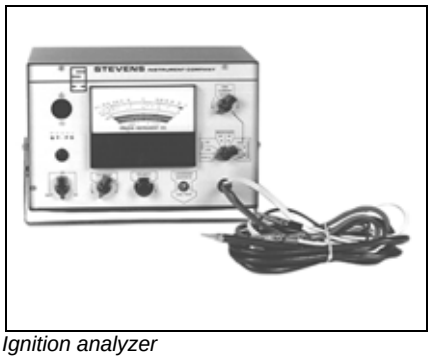

Ignition analyzer
P/N 501890

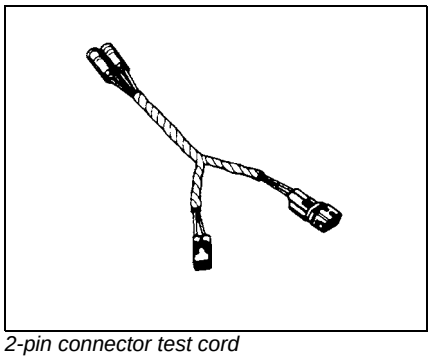

2-pin connector test cord
P/N 5034617

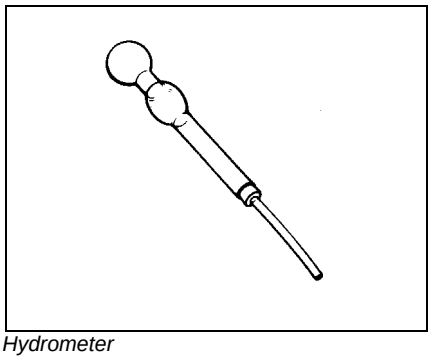

Hydrometer

Fuel

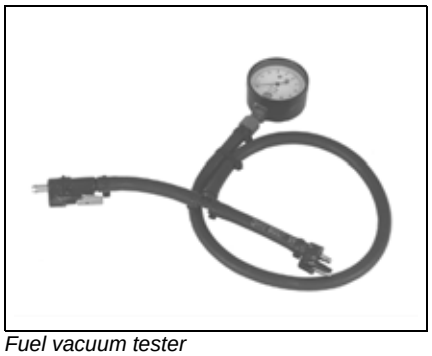

Fuel vacuum tester
P/N 390954

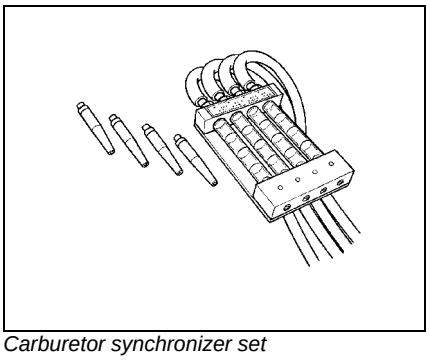

Carburetor synchronizer set
P/N 5034619

Gearcase

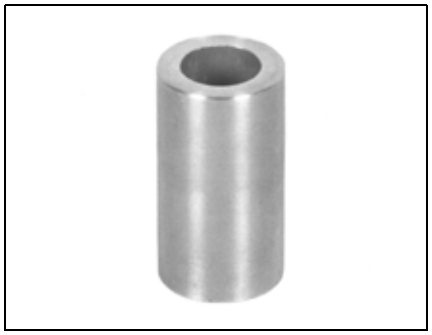

Spacer (Pinion bearing depth)
P/N 350932

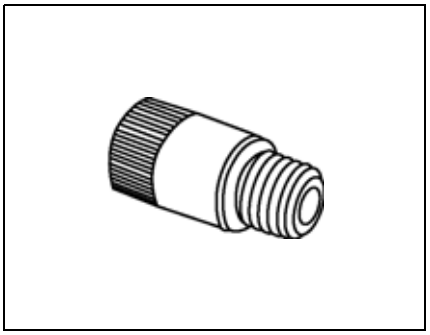

Gearcase adapter
P/N 772269

Propeller shaft bearing remover
P/N 5034764

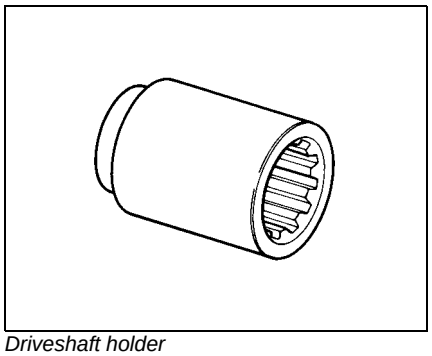

Driveshaft holder
P/N 345834

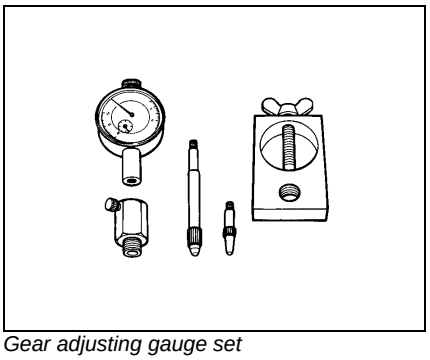

Gear adjusting gauge set

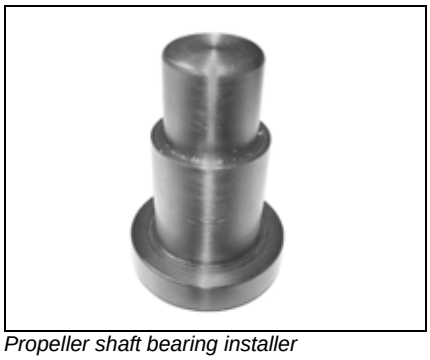

Propeller shaft bearing installer
P/N 5034774

Pinion bearing removal/installation
P/N 5034763
Component of P/N 5005928 kit

Gearcase filler
P/N 501882

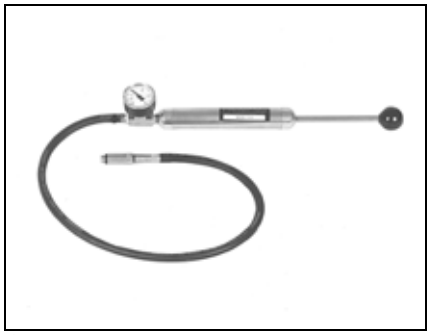

Gearcase pressure tester
P/N 507977 (Stevens P/N S-34)
Gearcase vacuum tester
P/N 507982 (Stevens P/N V-34)

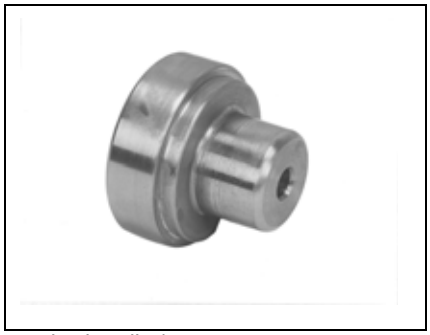

Bearing installer/remover
P/N 342685

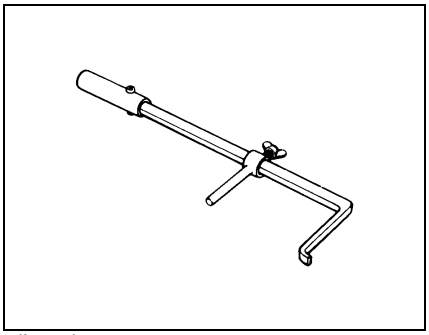

Oil Seal Remover

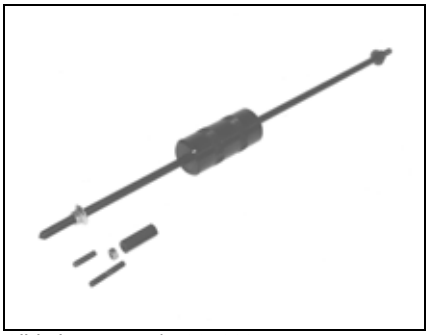

Slide hammer P/N 391008
Adapter P/N 340624

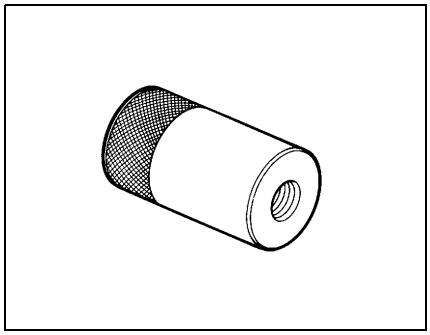

Propeller shaft remover
P/N 5034762

Small puller jaws P/N 432131
(replacement jaws P/N 437952)

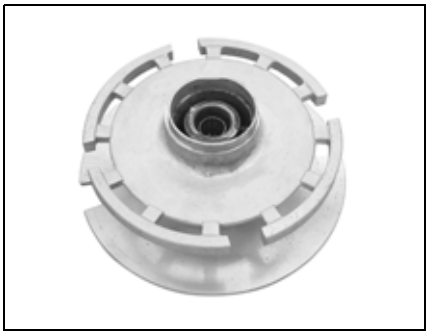

Test wheel P/N 5032468
Bushing P/N 5034620
Stopper P/N 5034621

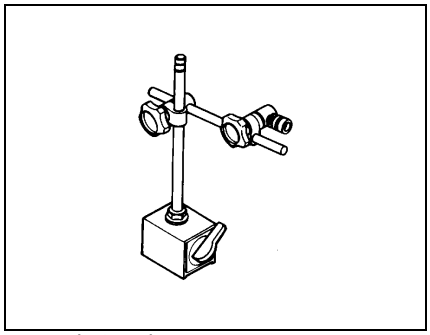

Magnetic Stand

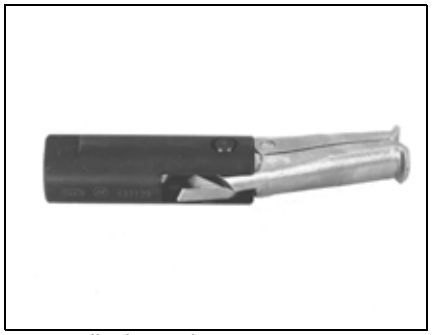

Large puller jaws P/N 432129
(replacement jaws P/N 437954)

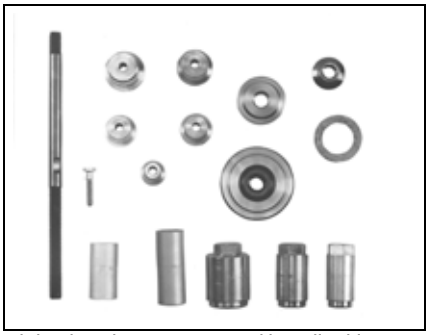

Pinion bearing remover and installer kit
P/N 391257 (Use with centering guide
from kit P/N 5000009)

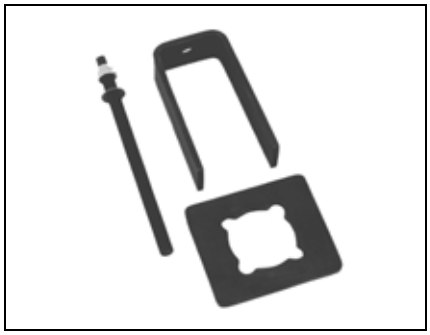

Puller Bridge
P/N 432127

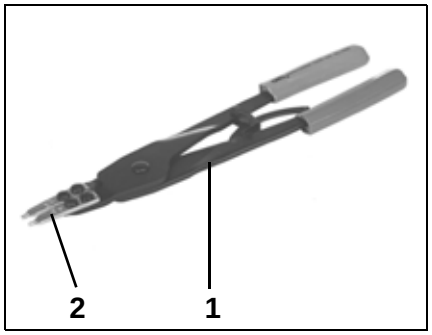

1. *Retaining ring pliers P/N 331045*
2. *Replacement tip set P/N 395967*

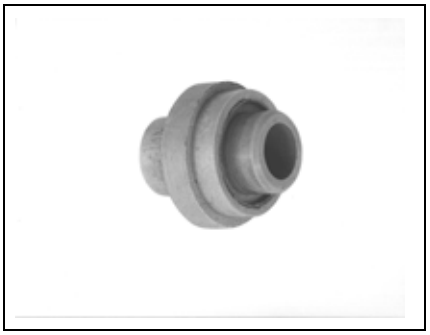

Seal installer
P/N 326545

Powerhead

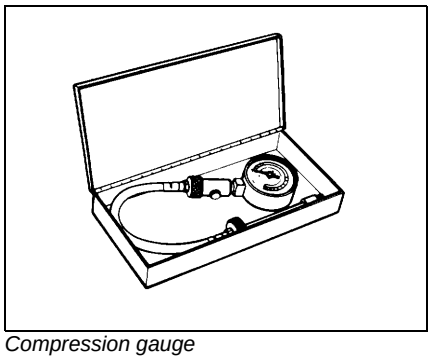

Compression gauge
Adapter (12 mm)

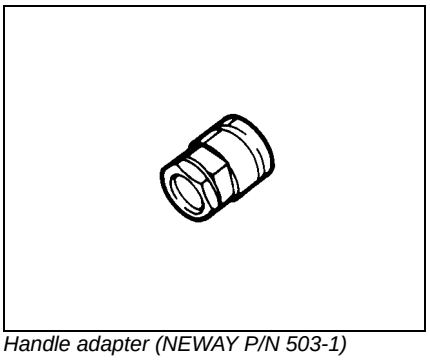

Handle adapter (NEWAY P/N 503-1)

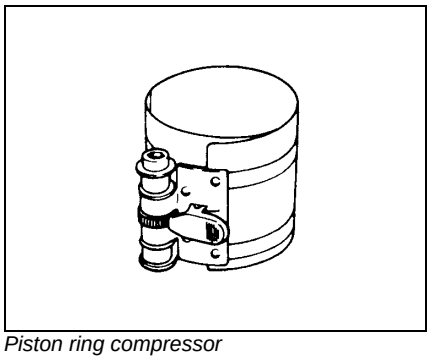

Piston ring compressor

Cylinder bore gauge
P/N 771310

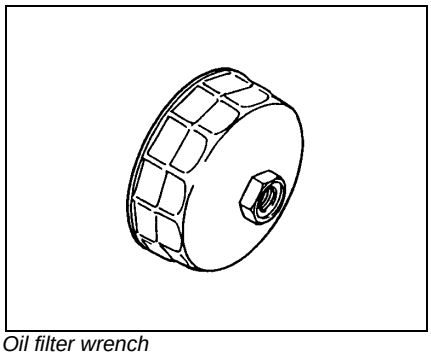

Oil filter wrench

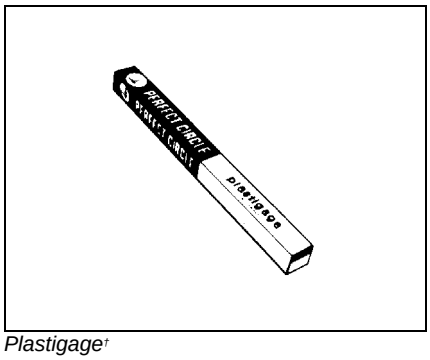

Plastigage†

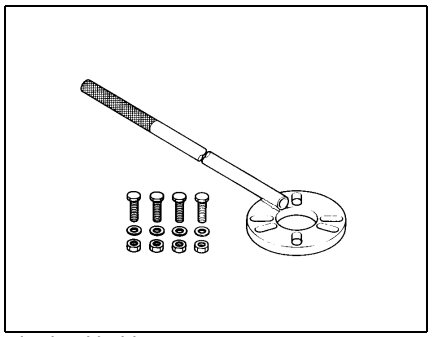

Flywheel holder
P/N 5034227

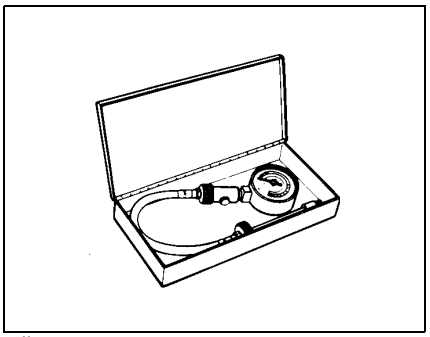

Oil pressure gauge
P/N 5000900

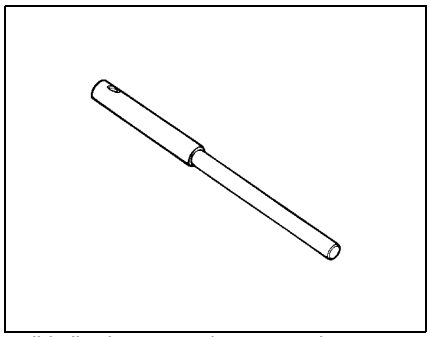

Solid pilot (NEWAY P/N-100-5.52)

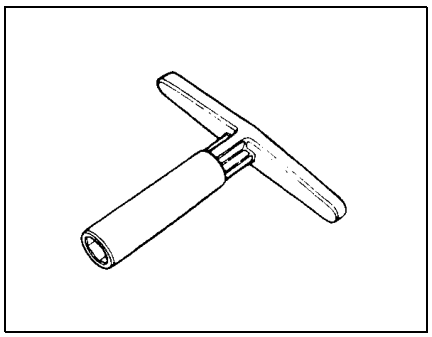

Handle (NEWAY P/N-505)

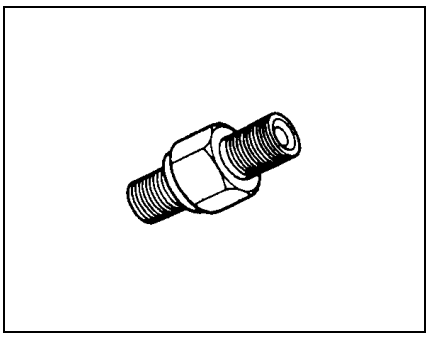

Oil pressure gauge adapter
P/N 350930

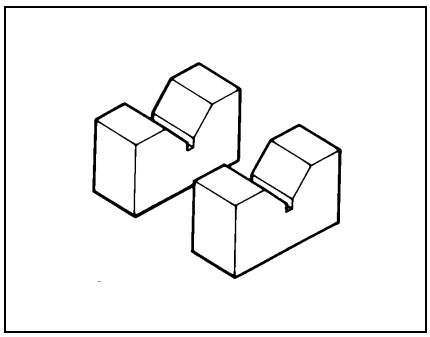

"V" block set

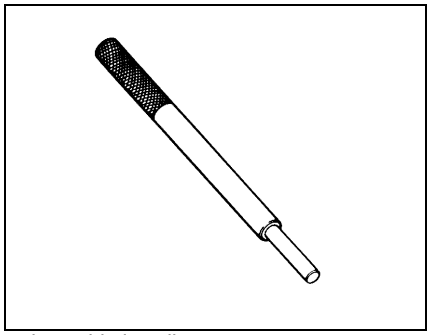

Valve guide installer

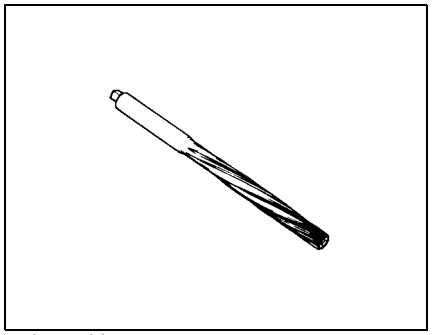

Valve guide reamer
(10.5 mm bore diameter)

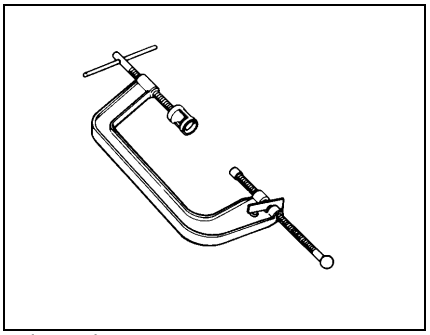

Valve spring compressor
P/N 346186

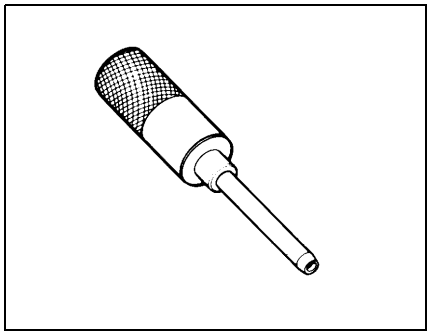

Valve guide installer

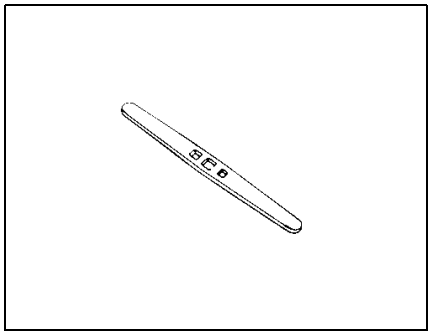

Valve guide reamer handle

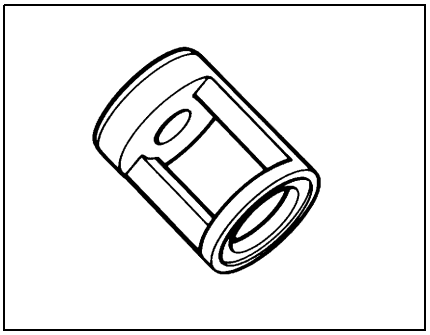

Valve lifter attachment
P/N 5000899

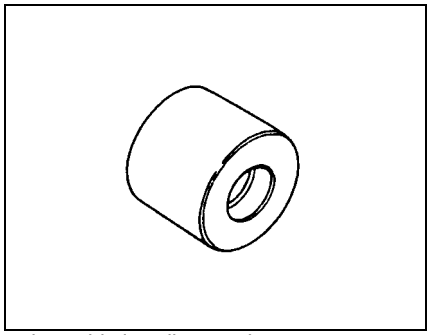

Valve guide installer attachment

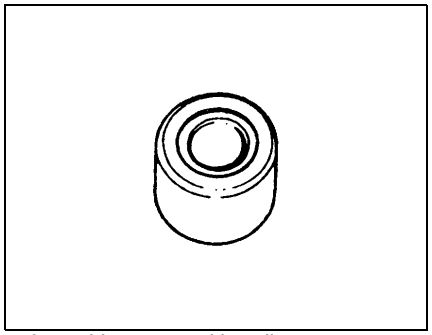

Valve guide stem seal installer
attachment

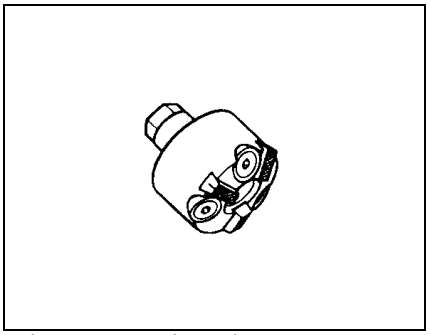

Valve seat cutter (N-121)

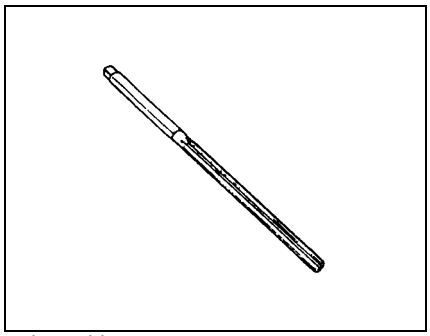

Valve guide reamer
(5.5 mm bore diameter)

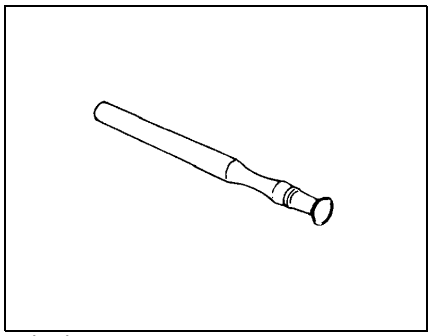

Valve lapper

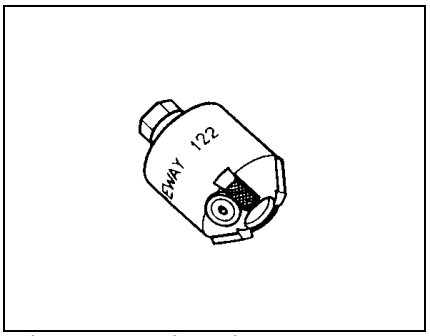

Valve seat cutter (N-122)

Universal

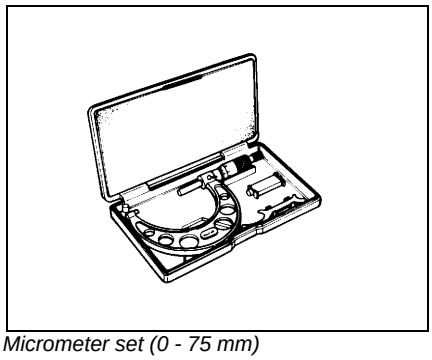

Micrometer set (0 - 75 mm)

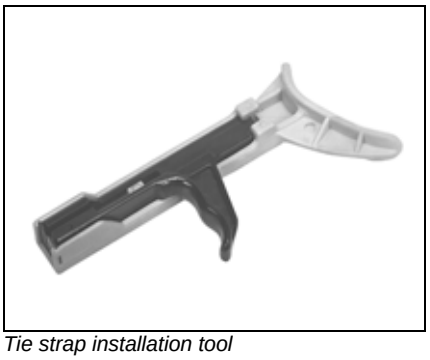

Tie strap installation tool
P/N 323716

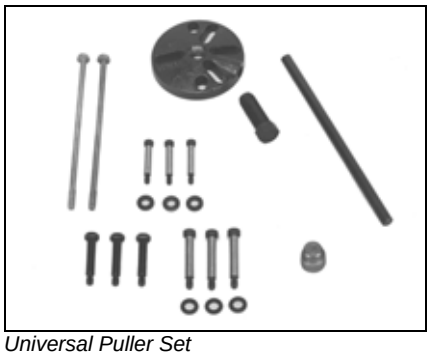

Universal Puller Set
P/N 378103

Syringe
P/N 346936

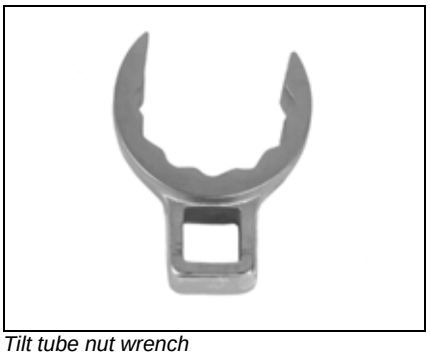

Tilt tube nut wrench
P/N 912084

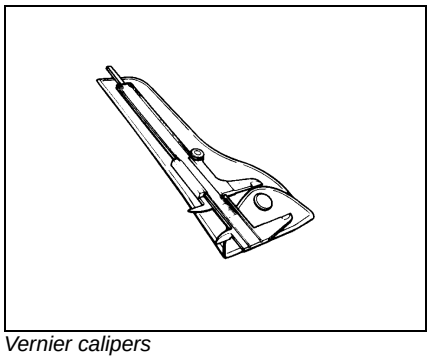

Vernier calipers

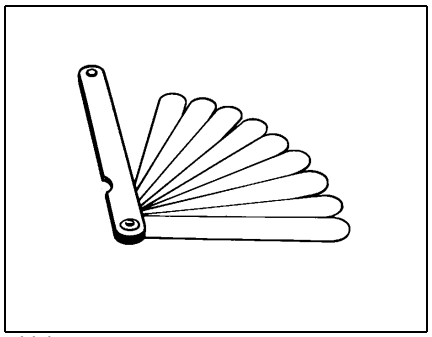

Thickness gauge

Torque wrench extension
P/N 912031

Temperature gun
P/N 772018

SHOP AIDS

Cleaning Solvent P/N 771087

Engine Tuner P/N 777185

Anti-Corrosion Spray P/N 777193

"6 in 1" Multi-Purpose Lubricant P/N 777192

D.P.L. Spray P/N 777183

Silicone spray P/N 775630

Ultra 4-Stroke Outboard Oil, P/N 775594

4-Stroke Outboard Oil, P/N 775597

HPF XR™ Gear Lube P/N 778747

HI-VIS™ Gearcase Lube P/N 775605

Triple-Guard® Grease P/N 508298

Extreme Pressure Grease™
P/N 508303

Moly Lube P/N 175356

Needle Bearing Grease, P/N 378642

Starter Bendix Lube P/N 337016

Storage Fogging Oil
P/N 777186

Power Trim/Tilt and Power Steering Fluid
P/N 775612

Adhesive 847 P/N 776964

Lubriplate† 777 P/N 317619

Black Neoprene Dip P/N 909570

Electrical Grease P/N 504824

2 + 4™ Fuel conditioner P/N 775613

Fuel System Cleaner P/N 777184

Carbon Guard™ P/N 775629

Gasket Sealing Compound P/N 317201

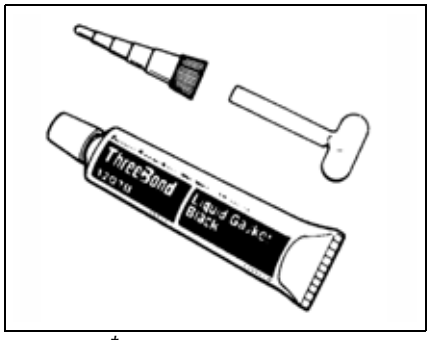

ThreeBond† 1104, P/N 351052
ThreeBond 1207B, P/N 351053

Permatex† No. 2, P/N 910032

GE† RTV Silicone Sealant P/N 263753

Pipe Sealant with Teflon P/N 910048

Thermal Joint Compound P/N 322170

GM† Gear Mark Compound P/N 772666

Locquic Primer P/N 772032

1. *Screw Lock P/N 500417*
   (Loctite† Purple 222 equivalent
2. *Nut Lock P/N 500421*
   (Loctite Blue 242 Equivalent)
3. *Ultra Lock P/N 500423*
   (Loctite Red 271 Equivalent)

NOTES

Technician's Notes

Related Documents

Bulletins	
Instruction Sheets	
Other	

INSTALLATION AND PREDELIVERY

TABLE OF CONTENTS

BOAT RIGGING 30
REMOTE CONTROLS 30
BATTERY INSTALLATION 32
FUEL SYSTEM REQUIREMENTS 33
OUTBOARD INSTALLATION 34
HULL PREPARATION 34
TRANSOM MEASURING AND DRILLING 35
LIFTING THE OUTBOARD 37
STEERING SYSTEMS 37
OUTBOARD MOUNTING 38
OUTBOARD RIGGING 39
MWS HARNESS INSTALLATION 39
CONTROL CABLE IDENTIFICATION 40
CONTROL CABLE INSTALLATION 41
WATER PRESSURE GAUGE CONNECTION 43
FUEL AND OIL 44
FUEL REQUIREMENTS 44
OIL REQUIREMENTS 45
RUNNING CHECKS 45
BREAK-IN (10 HOURS) 45
FUEL SYSTEM 46
EMERGENCY STOP SWITCH 46
START-IN-GEAR PREVENTION 46
TACHOMETER PULSE SETTING 47
WATER PUMP OVERBOARD INDICATOR 47
OPERATING TEMPERATURE 47
PROPELLER SELECTION 48
PROCEDURE 48
PROPELLER HARDWARE INSTALLATION 49
NOTES 50

BOAT RIGGING

Remote Controls

Control Selection

WARNING

The remote control used must have start-in-gear prevention. This feature can prevent injuries resulting from unexpected boat movement when the outboard starts.

Remote control styles and applications are described in the *Evinrude/Johnson Genuine Parts and Accessories Catalog.* Plan the installation of all remote controls carefully. Read the outboard's Operator's Guide and the remote control's installation instructions prior to installation.

The remote control and wiring harness used must have the following features:

- Start-in-gear prevention
- Emergency stop / key switch
- Shift stroke must measure 1.125 to 1.330 in. (28.6 to 33.8 mm) between NEUTRAL and FORWARD
- Throttle stroke must PUSH for open
- All wiring must be compatible with Modular Wiring System (MWS) components

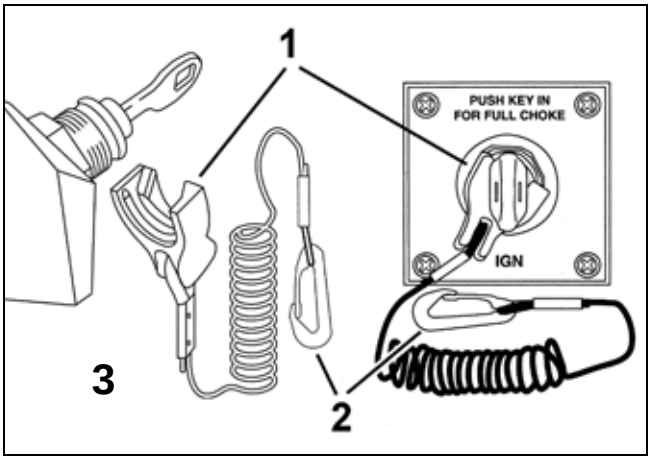

1. *Emergency stop clip* 002817
2. *Safety lanyard*
3. *Key switch with emergency stop feature*

Additional remote control information:

- Power trim/tilt switch(s) can be integral to the remote control for outboards with power tilt and trim.
- Side-mount controls require a neutral lock feature.
- Single-outboard binnacle remote controls are offered with or without an integrated key switch.

WARNING

Always install and recommend use of an emergency stop/key switch. Doing so will reduce the risk of personal injury or death should the operator fall away from the controls or out of the boat.

Installation Guidelines

Install the appropriate remote control following all instructions provided with the remote control.

Make sure the following items are checked:

- Correct length control cables and wiring harnesses
- Proper type and quality of cables and wiring harnesses
- Correct routing of cables and harnesses
- Appropriate slack in front of the outboard for remote control cables
- Proper routing of cables to prevent kinking
- Positioning and securing of cables and harnesses along their lengths to prevent movement or damage

Typical transom-mounted outboard installations require a 12 in. (30 cm) cable loop at the front of the outboard when the cables are routed from the side of the splash well.

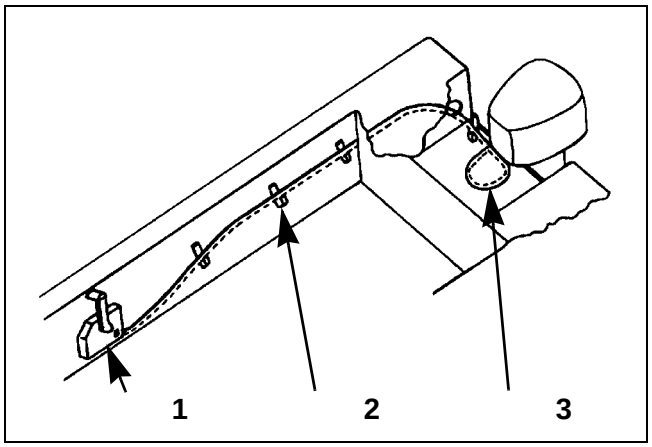

1. *Surface side-mount remote control* DR4277
2. *Cable support*
3. *12 in. (30 cm) cable loop at front of outboard*

SystemCheck™ Monitor

The *SystemCheck* engine monitor alerts the operator of certain engine problems. Refer to the Operator's Guide for detailed information related to the various warning signals.

IMPORTANT: Outboards with remote controls must be equipped with a *SystemCheck* (or equivalent) engine monitor. Operating the outboard without an engine monitor will void the warranty for failures related to monitored functions.

SystemCheck gauges are available in two sizes.

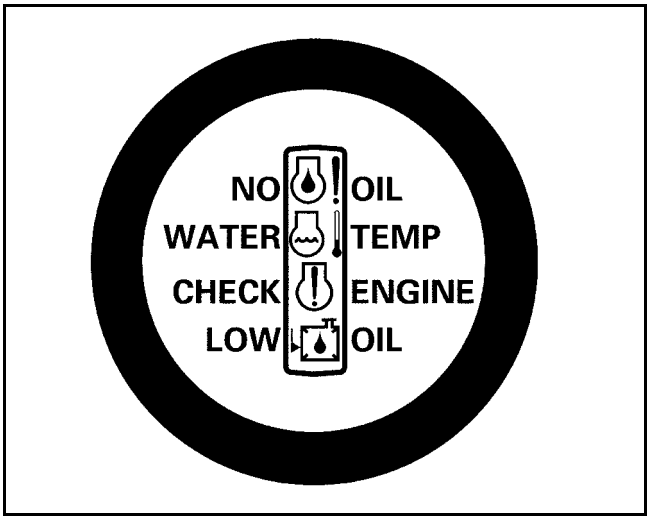

Typical *SystemCheck* gauge DR5206

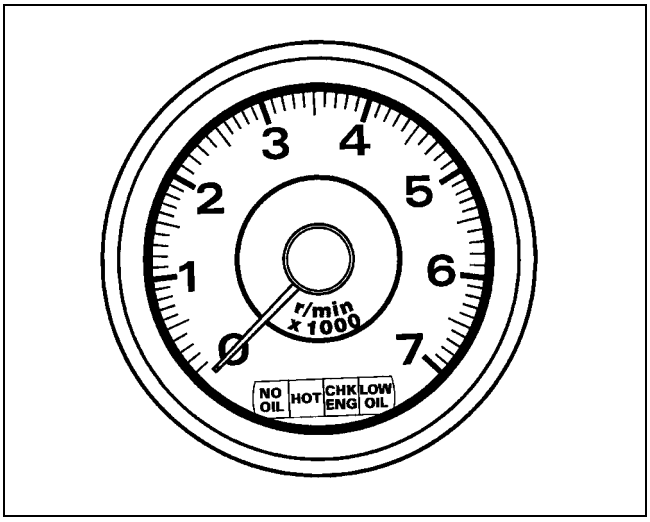

Typical *SystemCheck* gauge with tachometer DR5364

Battery Installation

Each outboard requires its own starting battery. Select a battery that meets or exceeds the minimum requirements.

Minimum 12 Volt Battery Recommendations

- 360 CCA (465 MCA), 50 amp-hr minimum

Location and Preparation

Proper installation will prevent battery movement while underway.

- Secure all batteries in protected locations.
- Position battery as close to the outboard as possible.
- Battery location must provide access for periodic maintenance.
- Use battery mounting trays or battery boxes on all battery installations.
- Connections and terminals must be covered with an insulator.
- Battery connections must be clean and free from corrosion.
- Read and understand the safety information supplied with the battery before installation.

⚠ WARNING ⚠

Keep the battery connections clean, tight, and insulated to prevent their shorting or arcing and causing an explosion. If the battery mounting system does not cover the connections, install protective covers. Check often to see that connections stay clean and tight.

Connections

IMPORTANT: Connect the battery positive (+) cable to the battery positive (+) post FIRST. Connect the battery negative (–) cable to the battery negative (–) post LAST.

Install a starwasher on the threaded battery post. Stack cables from the outboard, then cables from accessories. Finish this connection with a hex nut.

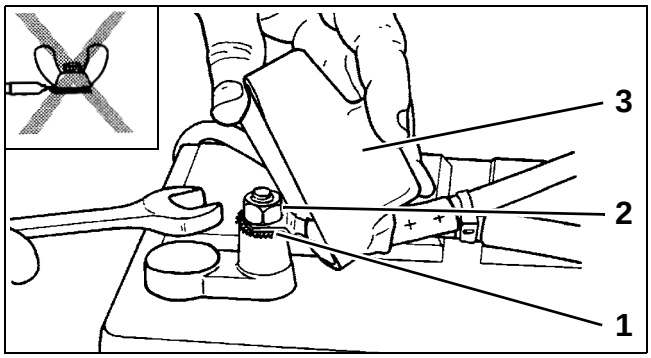

Marine Style Battery Post DR5103
1. *Starwasher*
2. *Hex nut*
3. *Terminal Insulator*

IMPORTANT: Do not use wing nuts to fasten ANY battery cables. Wing nuts can loosen and cause electrical system damage not covered under warranty.

Tighten all connections securely. Apply *Triple-Guard* grease to prevent corrosion.

Battery Cable Requirements

Evinrude/Johnson outboards are shipped with stranded copper battery cables for typical installations in which the starting battery is positioned close to the transom.

Specialized outboard installations with extended length battery cables require an increased wire size. Refer to the table below.

IMPORTANT: Inadequate battery cables can affect the performance of an outboard's high amperage start circuit and the cranking speed of the outboard. DO NOT use aluminum wire cables. Use ONLY AWG stranded copper wire cables.

Model	1 to 10 Ft. (0.3 to 3 m)	11 to 15 Ft. (3.4 to 4.6 m)	16 to 20 Ft. (4.9 to 6.1 m)
30 HP	6 Gauge	4 Gauge	3 Gauge

Fuel System Requirements

Overview

Fuel systems must meet the minimum specifications. These requirements must be met to insure the proper delivery of fuel to the outboard.
The guidelines established by the ABYC and U.S. Coast Guard should always be followed.

- Permanent fuel tanks must be properly vented outside of the hull.
- Remote fuel tank gas fills must be grounded.
- Permanent fuel tank pickups should have the correct anti-siphon valve installed to prevent fuel flow if a leak occurs in the fuel distribution system. Refer to ABYC Standard H-24.

Fuel Hose

All fuel hoses must be designated as fuel hose and approved for marine use.

- Use only fuel lines (or copper tubing) that meet the outboard minimum I.D. requirement.
- “USCG Type A1" fuel hose must be used between permanent fuel tanks and motor well fittings on inaccessible routings.
- Use “USCG Type B1” for fuel hose routings in motor well areas.
- Use corrosion-resistant metal clamps on permanently installed fuel hoses routed below decks.
- Multi-outboard applications require separate fuel tank pickups. Install separate fuel hoses from the fuel tank to the outboards in multi-outboard applications.

Fuel System Primer

Outboards require a priming system capable of refilling the fuel system after periods of non-use.

Primer Bulbs

Primer bulbs that meet the outboard's minimum inside diameter fuel line requirements are used on most outboards.

Install the primer bulb in the fuel supply hose as follows:

- The primer bulb should be installed in an accessible location.
- The arrow on the primer bulb must point in the direction of fuel flow.
- The fuel primer bulb must be positioned in the fuel supply hose so the primer bulb can be held with the arrow pointing “up” during priming.

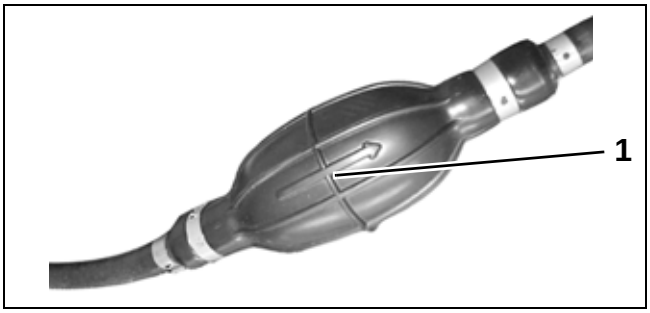

1. Arrow indicates direction of fuel flow 000124

Fuel Filters

Boat-mounted fuel filters and water-separating fuel filter assemblies must meet the required fuel flow and filter specification. The filter must be mounted to a rigid surface above the "full" level of the fuel tank and accessible for servicing.

The *Evinrude/Johnson* Fuel Filter Assembly, P/N 174176, meets all requirements for a water-separating fuel filter.

0070

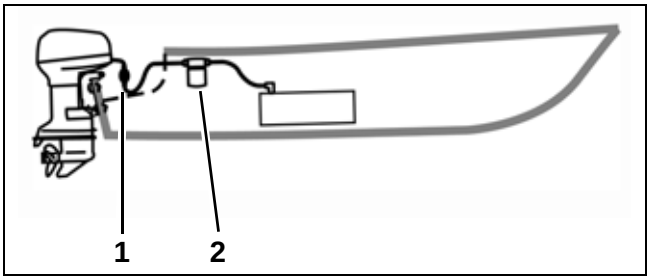

Typical Fuel Supply Configuration 001151
1. Primer bulb
2. Fuel filter (optional)

OUTBOARD INSTALLATION

Hull Preparation

Maximum Capacity

WARNING

Do not overpower the boat by installing an outboard that exceeds the horsepower indicated on the boat's capacity plate. Overpowering could result in loss of control.

Before installing outboard:

- Refer to the boat manufacturer's certification label for maximum horsepower rating.
- Refer to ABYC Standards to determine the maximum horsepower capacity for boats without certification labeling.

1029A

Mounting Surface

Inspect transom surface prior to drilling mounting holes.

- The transom should meet ABYC Standards.
- The transom must be flat and cannot have any protrusions.
- The transom angle should be approximately 14 degrees.
- Check transom strength and height.

WARNING

DO NOT install an outboard on a curved or irregular surface. Doing so can wear, bind, and damage components, causing loss of control.

Top Edge of Transom or Bracket

Transom thickness or off-sets must also be considered. The top edge of the transom or bracket must provide a proper surface for stern brackets. The stern brackets must contact the flat surface of the transom or bracket. Modify moldings or components that prevent the stern brackets from resting against the transom surface. Do not modify transom brackets.

Transom Clearances

Make sure the transom and splash well area provide adequate clearances.

- The top edge of the transom should be wide enough to allow full steering travel. The ABYC standard for most single outboard installations is 33 in. (84 cm).
- Check cable and hose routing clearances.
- Make sure there is clearance for mounting bolts and washers. Check the inside area of the transom for obstructions prior to drilling holes.

Water Flow

Inspect the hull area directly in front of the mounting location.

- Boat-mounted equipment should not create turbulence in the water flow directly in front of the outboard's gearcase. Turbulence or disruptions in the water flow directly in front of the gearcase will affect engine cooling and propeller performance.

Mounting Hardware

WARNING

Use all mounting hardware supplied with the outboard to help ensure a secure installation. Substituting inferior hardware can result in loss of control.

Transom Measuring and Drilling

Hull Centerline

Locate the centerline of the boat transom as it relates to the hull (bottom) of the boat.

Use a straightedge to draw a line connecting the port and starboard chines. The chines should be used as reference points for determining the centerline of the hull.

Use a framing square to accurately place a line on the transom. The centerline of the hull should be in line with the keel of the hull and perpendicular to the midpoint of the line connecting the port and starboard chines.

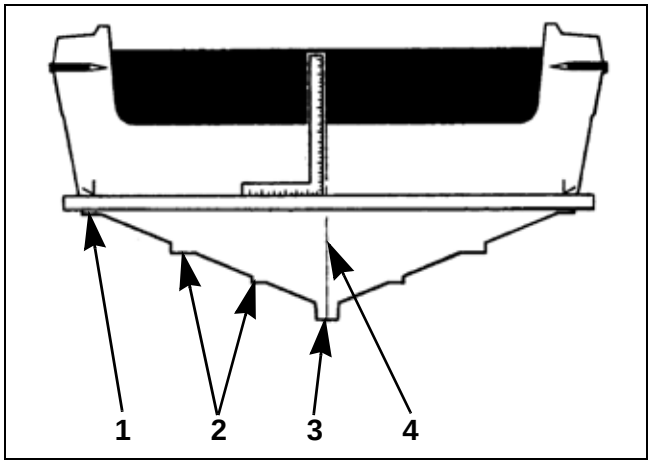

1. *Chine*
2. *Strake*
3. *Keel*
4. *Hull centerline*

DR5568

Transom Heights

Make sure the transom height is consistent with the height of the outboard to be installed.

- A 19 to 21 in. (48.3 to 53.3 cm) transom height uses a 20 in. (50.8 cm) shaft outboard.
- The shaft length of the outboard being installed should come close to matching the transom height of the boat.

Determine transom height by measuring from the top edge of the transom, along the centerline.

Use a straightedge as a reference to extend the bottom of the boat.

Position the straightedge along centerline. The distance from the top edge of the straightedge to the top edge of the transom is the actual transom height.

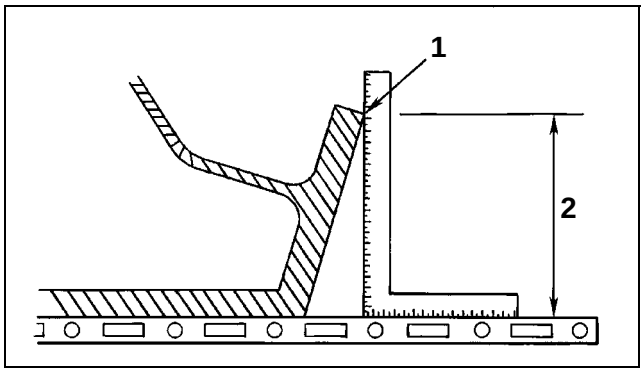

1. *Top edge of transom*
2. *Actual transom height*

DR5541

Transom Drilling Locations

Refer to **Drilling and Hardware Diagram** on p. 36 for measurements. Or, use the outboard stern brackets as a template for location and size of holes to drill in the transom.

Center the outboard on the transom (or mounting bracket) and tighten clamp screws by hand. An accessory transom plate is recommended to protect the transom.

Using each stern bracket's mounting holes as a guide, drill holes through the transom.

IMPORTANT: Be sure to drill the required holes perpendicular to transom surface.

Drilling and Hardware Diagram

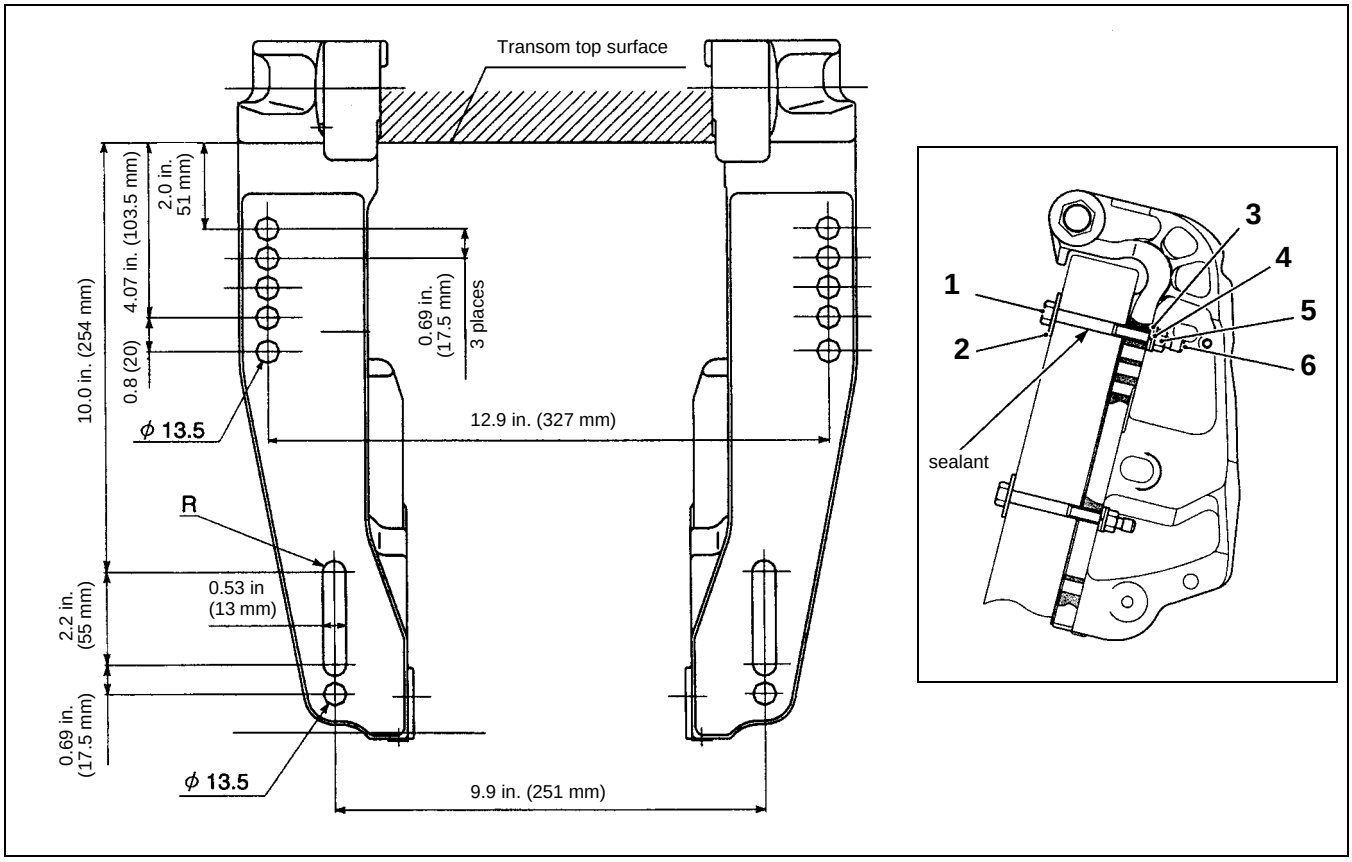

TYPICAL - Stern bracket for your engine may appear different, but dimensions apply to all 30 to 140 Models.

Item	Part name	Part Number	Quantity
1	Bolt 4 in. (100 mm)	5030385	4
	4.5 in. (115 mm)	5030386	4
	6 in. (150 mm)	5033511	4
2	Washer (large)	5030436	4
3	Washer (small)	5030438	4
4	Lock washer	5030462	4
5	Nut	5030418	4
6	Cap	5030839	4

- Drill the upper holes at least 1.75 in. (45 mm) away from the transom top surface.
- Install the large diameter washer (P/N 5030436) on the transom board side.
- To ensure a water-tight outboard installation, polysulfide sealant should be applied to all bolt holes.
- If tightening torque cannot be reached to the specified torque due to weak transom material, it is necessary to reinforce the transom board with an attachment plate.

Lifting the Outboard

Lift the outboard using the lift grips (NOT the tilt grip or steering handle) and place it in the center of the boat's transom.

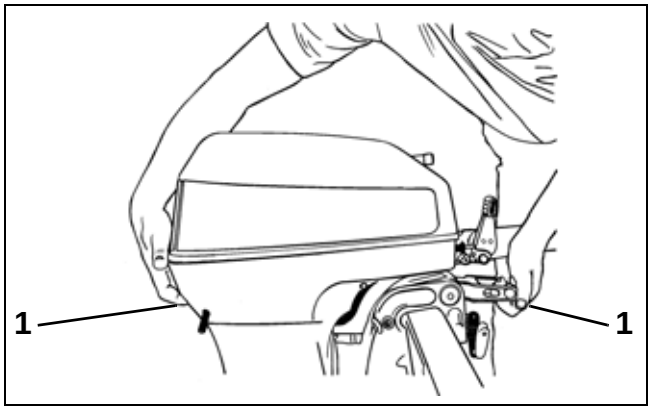

TYPICAL DR4661
1. Lift grips

Before Mounting Outboard to Transom

Some rigging components that attach directly to the outboard should be assembled before the outboard is mounted to the boat's transom. Steering system components and gearcase speedometer pickup hoses are the most common. Determine what equipment will be installed prior to mounting the outboard to the transom or bracket.

Steering Systems

Mechanical Cables

All *Evinrude/Johnson* outboards equipped with tilt tubes are designed to be compatible with mechanical steering systems that meet ABYC Standard P-17. Single-cable mechanical steering systems can be used on single or dual-outboard installations if an ABYC-approved steering link is used.

Dual-cable mechanical steering helps provide firm steering control at high speeds.

Extend the output end of the steering cable and lubricate the inner core of cable prior to installation.

ABYC-approved mechanical steering cable. 5873

IMPORTANT: Install steering cable through tilt tube **before** mounting outboard on transom. Tighten nut securely.

Apply *Triple-Guard* grease to cable and install cable wiper nut on tilt tube.

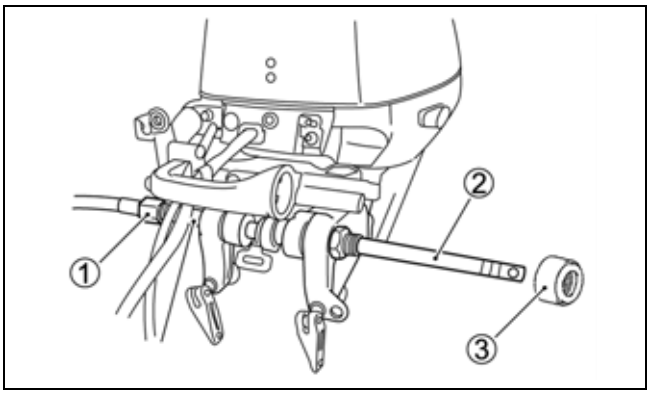

1. Cable nut 004823
2. Grease
3. Wiper nut

Drag Link

Connect drag link to the steering cable with washers and safety nut. Tighten the nut to 84 in. lbs. (10 N·m), then back the nut off 1/8 turn.

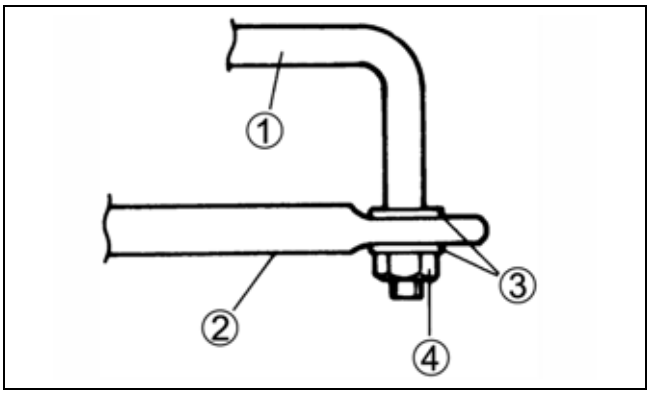

1. Drag link 004824
2. Steering cable
3. Washers
4. Safety nut

Move the steering cable until hole of drag link aligns with the front threaded hole on the steering arm attachment.

Connect the drag link to the attachment by tightening the screw with spacer and washers. Tighten screw to 24.5 ft. lbs. (34 N·m).

Install safety nut and tighten to 24.5 ft. lbs. (34 N·m).

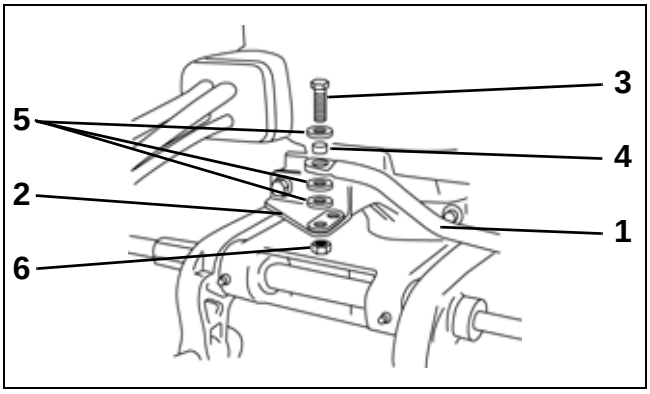

1. Drag link 005079
2. Attachment
3. Screw
4. Spacer
5. Washers
6. Safety nut

IMPORTANT: After assembly, check for smooth and free steering operation.

Outboard Mounting

Fastening the Outboard to the Transom

WARNING

The outboard must be correctly installed. Failure to correctly install the outboard could result in serious injury, death, or property damage.

IMPORTANT: Follow all directions carefully. The outboard's warranty will not cover product damage or failure resulting from incorrect outboard installation.

WARNING

Even if equipped with clamp screws, the outboard must be bolted to the boat to prevent it from "working off the transom" during operation.

Center the outboard on the boat's transom (or mounting bracket) and tighten the clamp screws by hand, NOT with tools. An accessory transom plate is recommended to protect the boat's transom (or mounting bracket).

WARNING

If either side of the transom deforms or cracks when the bolts are tightened to their recommended torque, the transom construction may not be adequate or may be deteriorated. Structural failure of the transom could result in loss of boat control and injury to the occupants.

IMPORTANT: Use a marine sealant rated for above or below waterline use. RTV silicone is not approved for below waterline use. Polyurethane sealants are not easily removed and may damage outboard or boat mounting surfaces when removed.

Apply marine sealer (rated for above and below waterline use) under hex heads of bolts, on the mounting plates, and to the bolt shanks.

Tighten bolts to 14.5 ft. lbs. (20 N·m).

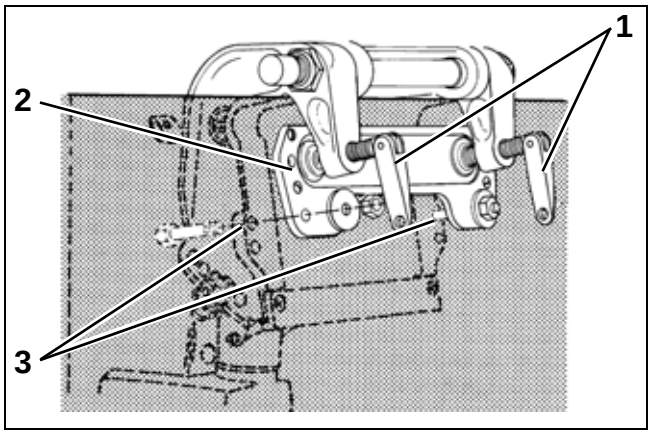

TYPICAL DR5815
1. *Clamp screws*
2. *Transom plate*
3. *Stern bracket holes*

IMPORTANT: After 30 minutes of operation, retighten clamp screws by hand. DO NOT use tools to tighten clamp screws. Check clamp screws regularly.

OUTBOARD RIGGING

WARNING

To prevent accidental starting of engine, confirm the battery cables are disconnected at battery and spark plug leads are disconnected from spark plugs.

MWS Harness Installation

Remove six (6) screws and starboard side lower engine cover.

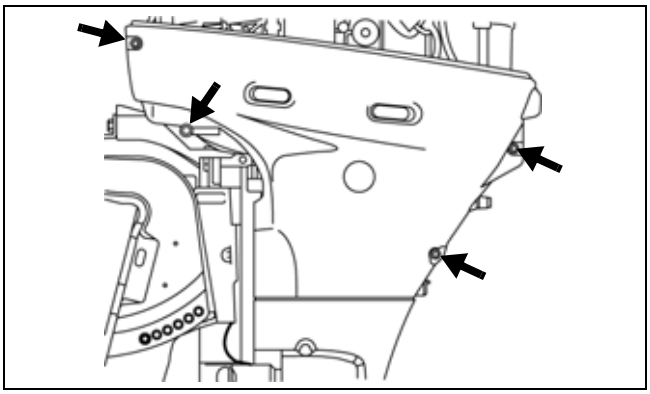

Port side 001722

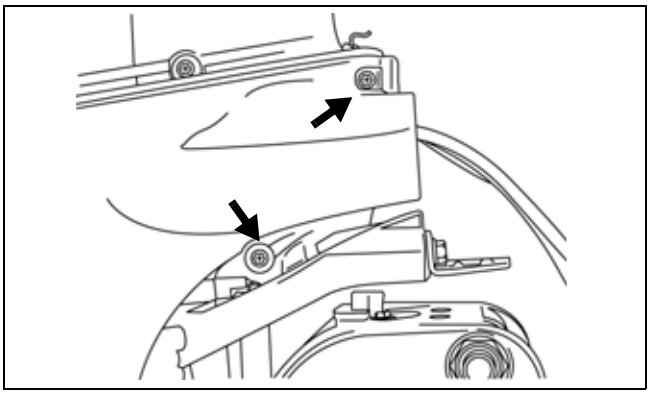

Starboard side 001723

Remove grommet from front panel.

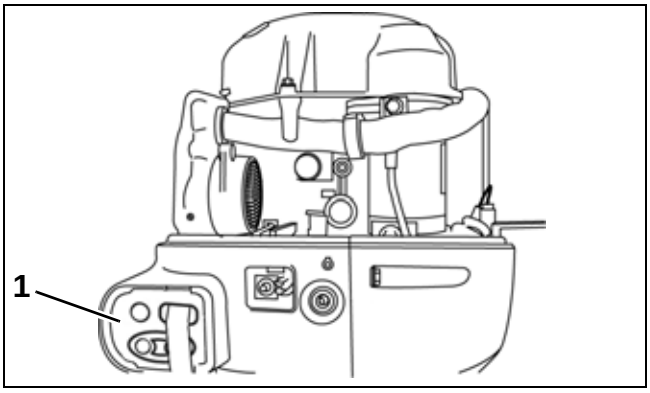

1. Grommet 001668

Before installing electrical connectors, check that the seal is in place. Clean off any dirt from connectors. Apply a light coat of *Electrical Grease* to the seal. Push connectors together until latched.

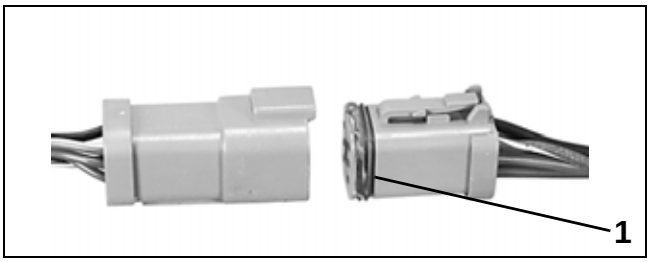

1. Seal 42079A

Insert MWS cable through front panel. Join MWS harness connectors to engine connectors. Secure 6-pin connectors in clips and push excess trim and tilt cable underneath air silencer.

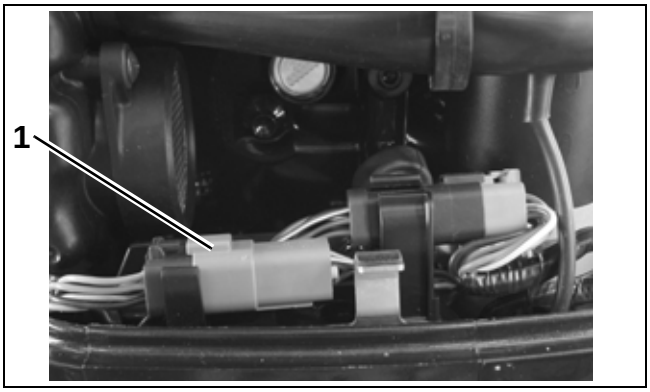

1. 6-pin connector 002856

Control Cable Identification

IMPORTANT: Control cable function must be identified before rigging outboard.

Identify each control cable:

- Put the control handle into NEUTRAL position. The throttle cable casing guide will retract completely and the shift cable casing guide will go to the midpoint of its travel.

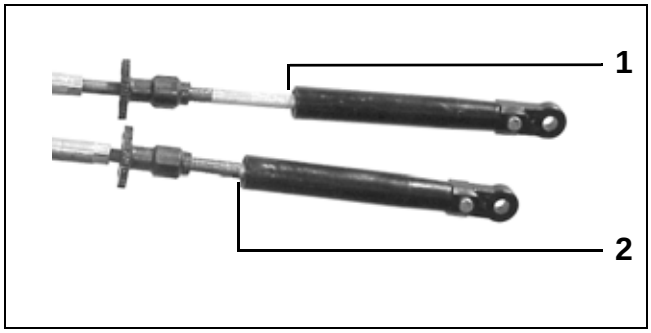

1. Shift cable casing guide extended to midpoint DP0811
2. Throttle cable casing guide retracted

Extend the control cables and lubricate them with *Triple-Guard* grease.

30501

⚠ WARNING ⚠

To prevent accidental starting, disconnect the battery cables at the battery. Twist and remove all spark plug leads.

Control Cable Installation

Shift Cable

Move the remote control handle to NEUTRAL.

Make sure gearcase is in NEUTRAL gear detent.

Remove cable retainer screw and plate.

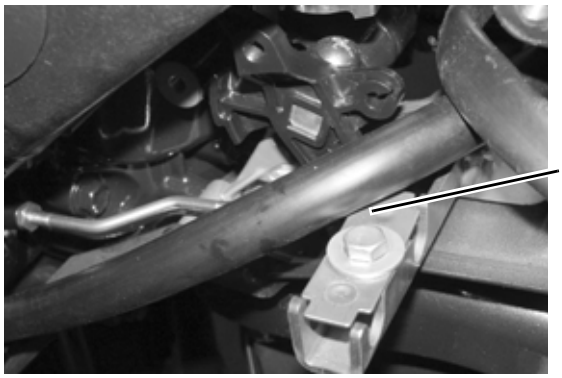

1. Cable retainer screw 002857

WARNING

Failure to properly install shift cable retainer clip could result in loss of shift function.

Install the shift cable on the shift lever pin using the flat washer and retainer clip supplied with the outboard.

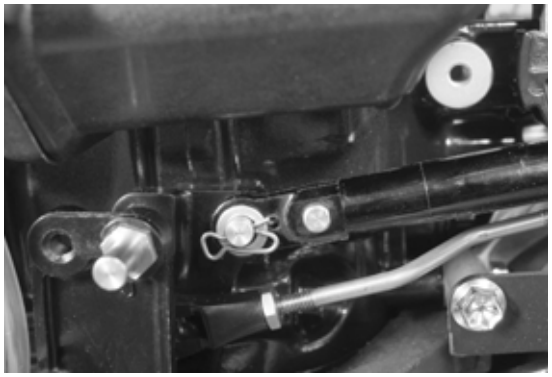

002858

Pull end of cable to remove slack and adjust shift cable trunnion nut to fit in anchor pocket.

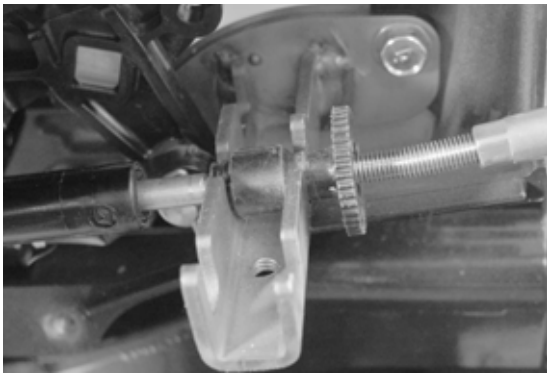

002859

Move remote control lever to FORWARD and make sure propeller shaft is in gear. Do the same in REVERSE.

Throttle Cable

Move the remote control handle from NEUTRAL to the FORWARD detent, and then **halfway** back to NEUTRAL.

Make sure the throttle lever is fully closed, as shown. There should be some clearance between the roller and throttle cam.

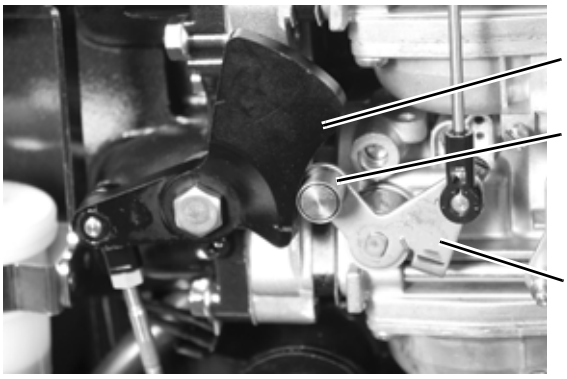

1. Throttle lever 002863
2. Roller
3. Throttle cam

WARNING

Failure to properly install throttle cable retainer clip could result in loss of throttle function.

Attach throttle cable to throttle lever pin using flat washer and retainer clip supplied with outboard.

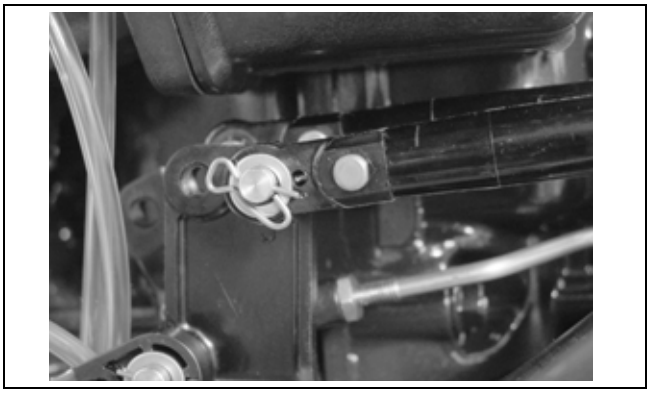

002860

Pull on throttle cable to remove backlash. Adjust trunnion nut to fit in anchor pocket with throttle held closed by throttle spring. Do not pull on throttle cable while adjusting length.

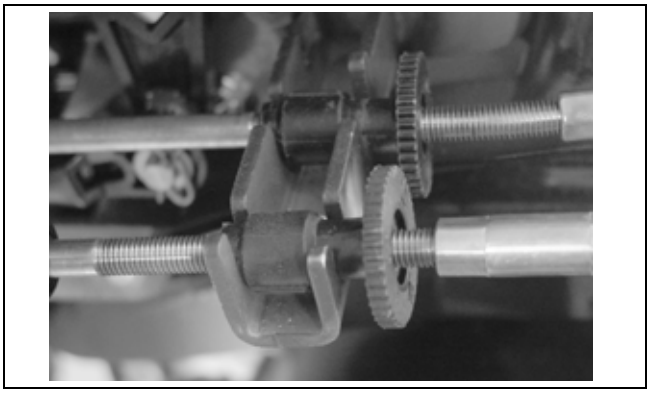

002861

Install cable retainer and screw and torque screw to 60 to 84 in.lbs. (7 to 9 N·m).

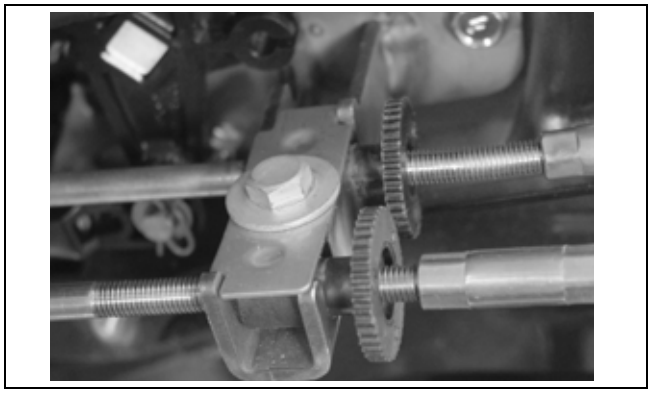

002862

Make sure the throttle lever contacts the stopper when the throttle control is fully open.

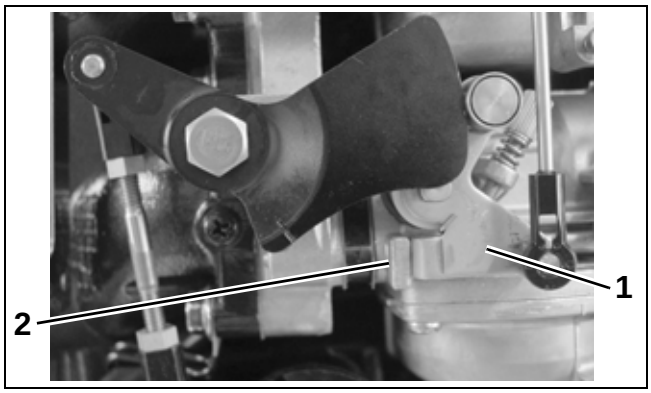

1. *Throttle lever*
2. *Stopper*

002864

Slip rubber grommet onto control cables, MWS harness, and battery cables. Press grommet onto lower engine cover front panel.

Water Pressure Gauge Connection

Locate water hose on starboard side of powerhead.

Cut hose approximately 2.75 in. (70 mm) from block fitting.

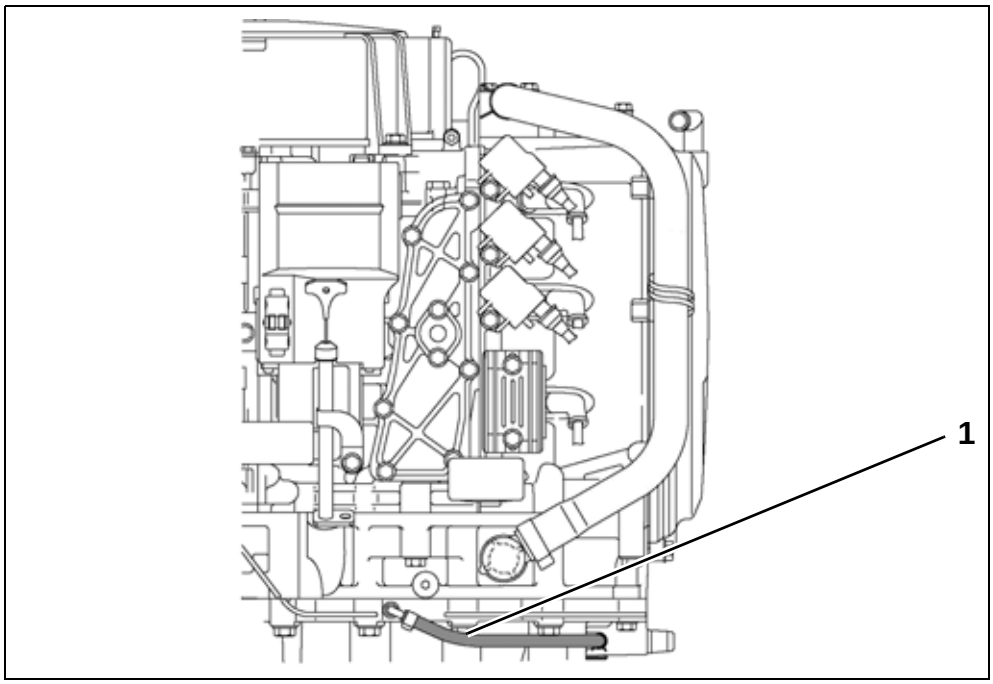

1. Cut hose here 003002

Install T-fitting supplied in kit, with restricted part of fitting toward water pressure gauge. Route hose through rigging grommet in lower engine cover.

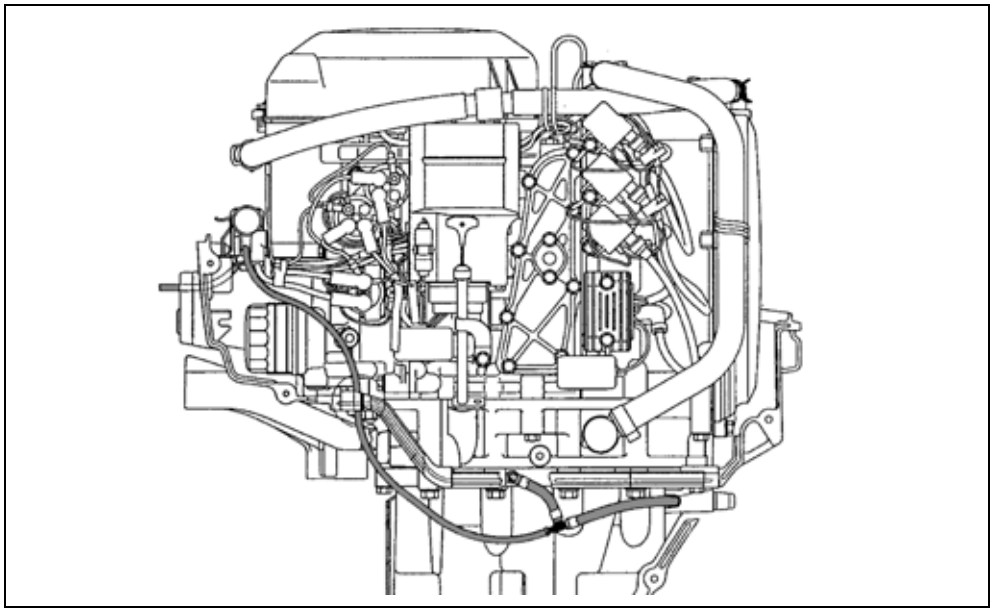

003001

FUEL AND OIL

Fuel Requirements

WARNING

Gasoline is extremely flammable and highly explosive under certain conditions. Improper handling of fuel could result in property damage, serious injury or death.

Always turn off the outboard before fueling.

Never permit anyone other than an adult to refill the fuel tank.

Do not fill the fuel tank all the way to the top or fuel may overflow when it expands due to heating by the sun.

Remove portable fuel tanks from the boat before fueling.

Always wipe off any fuel spillage.

Do not smoke, allow open flames or sparks, or use electrical devices such as cellular phones in the vicinity of a fuel leak or while fueling.

Minimum Octane

Evinrude/Johnson outboards are certified to operate on unleaded automotive gasoline with an octane rating equal to or higher than:

- 87 (R+M)/2 AKI, or
- 90 RON

Use unleaded gasoline that contains methyl tertiary butyl ether (MTBE) **ONLY** if the MTBE content does not exceed 15% by volume.

Use alcohol-extended fuels **ONLY** if the alcohol content does not exceed:

- 10% ethanol by volume
- 5% methanol with 5% cosolvents by volume

When using alcohol-extended fuels, be aware of the following:

- The boat's fuel system may have different requirements regarding the use of alcohol fuels. Refer to the boat's owner guide.
- Alcohol attracts and holds moisture that can cause corrosion of metallic parts in the fuel system.
- Alcohol blended fuel can cause engine performance problems.
- All parts of the fuel system should be inspected frequently and replaced if signs of deterioration or fuel leakage are found. Inspect at least annually.

IMPORTANT: Always use fresh gasoline. Gasoline will oxidize, resulting in loss of octane and volatile compounds, as well as the production of gum and varnish deposits which can damage the outboard.

Additives

IMPORTANT: The only fuel additives approved for use in *Evinrude* outboards are *2+4*® fuel conditioner and *Evinrude/Johnson* Fuel System Cleaner. **Use of other fuel additives can result in poor performance or engine damage.**

***Evinrude/Johnson 2+4* Fuel Conditioner** will help prevent gum and varnish deposits from forming in fuel system components and will remove moisture from the fuel system. It can be used continuously and should be used during any period when the outboard is not being operated on a regular basis. Its use will reduce spark plug fouling, fuel system icing, and fuel system component deterioration.

***Evinrude/Johnson* Fuel System Cleaner** will help keep fuel injectors in optimal operating condition.

***Evinrude/Johnson* Carbon Guard** will minimize carbon deposit build-up when used as directed.

Oil Requirements

IMPORTANT: 4-Stroke outboards are shipped without oil in the crankcase. Oil must be added before starting the engine for the first time.

IMPORTANT: During the initial 10-hour break-in period, use *Evinrude/Johnson* 4-Stroke Outboard Oil or SAE 10W-40, API SE, SF, SG, SH, or SJ rated. DO NOT use synthetic or synthetic blend oils during break-in period.

Evinrude/Johnson Ultra™ 4-Stroke synthetic outboard oil is recommended for normal use in these outboards after break-in.

If *Ultra 4-Stroke* oil is not available, you must use SAE 10W-40, API SE, SF, SG, SH, or SJ rated.

IMPORTANT: Failure to follow this recommendation could void the outboard warranty if a lubrication-related failure occurs.

If SAE 10W-40 motor oil is not available, select an alternative according to the following chart:

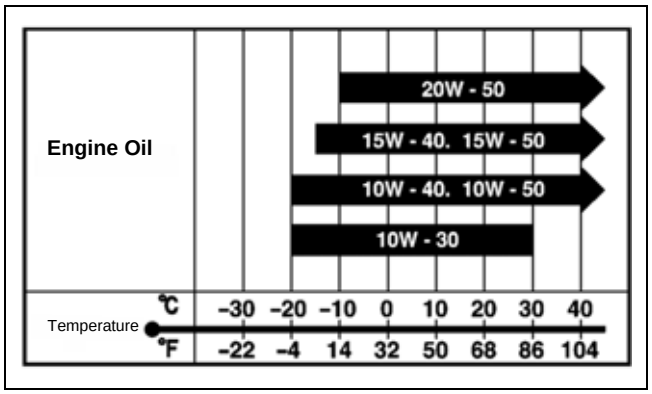

004813

RUNNING CHECKS

WARNING

DO NOT run outboard without a water supply to the outboard's cooling system. Cooling system and/or powerhead damage could occur.

DANGER

DO NOT run the engine indoors or without adequate ventilation or permit exhaust fumes to accumulate in confined areas. Engine exhaust contains carbon monoxide which, if inhaled, can cause serious brain damage or death.

DANGER

Contact with a rotating propeller is likely to result in serious injury or death. Assure the engine and prop area is clear of people and objects before starting engine or operating boat. Do not allow anyone near a propeller, even when the engine is off. Blades can be sharp and the propeller can continue to turn even after the engine is off.

Break-In (10 Hours)

Follow this procedure to protect the outboard during its initial hours of operation. Careful break-in allows internal engine components to seat properly, resulting in maximum engine life and performance.

Failure to carefully follow the break-in procedures can result in engine damage.

Perform the 10-Hour break-in procedure with the boat and engine in the water, using an appropriate propeller.

IMPORTANT: DO NOT perform break-in using a flushing device. DO NOT start-up or run the engine out of water. DO NOT leave a running engine unattended.

During the break-in, check water pump operation often. Look for a steady stream of water from the water pump indicator. If the stream of water stops, shut off the engine to prevent damage. Find and correct the cause before continuing.

Change the RPM often. Avoid holding a throttle setting longer than 15 minutes.

Check the crankcase oil level often. Add oil if needed.

First 10 minutes of operation — Operate engine in gear at idle only.

Balance of First 2 hours of operation — Operate in gear below 3500 RPM or 1/2 throttle only.

With easy planing boats, use full throttle to quickly accelerate boat onto plane. Immediately reduce throttle to one-half as soon as the boat is on plane. BE SURE boat remains on plane at this throttle setting.

Third hour of operation — Run the engine in gear at various speeds up to 4000 RPM or 3/4 throttle only.

Balance of first 10 hours of operation — Run the engine in gear at various engine speeds including full throttle, but remain at full throttle no longer than 5 minutes.

Change the engine speed every 15 minutes.

DO NOT exceed recommended maximum engine RPM. Refer to **TECHNICAL DATA** on p. 16.

Fuel System

Perform running checks of the fuel system by following these steps:

- Squeeze fuel primer bulb until hard or activate electric primer. Observe all fuel hoses and connections. Repair any leaks.
- Start outboard. Visually inspect all oil hoses and connections and fuel hoses and connections. Repair any leaks or misrouted hoses.

Emergency Stop Switch

Check emergency stop function. With outboard running at IDLE, pull safety lanyard from emergency stop switch. Outboard must stop immediately.

Outboard Controls

Confirm that controls can be easily moved into all gear and throttle settings. Do not shift outboard when propeller shaft is not turning.

Start-In-Gear Prevention

⚠ WARNING ⚠

Make certain that the starter will not operate when the outboard is in gear. The start-in-gear prevention feature is required by the United States Coast Guard to help prevent personal injuries.

Start outboard and shift outboard into FORWARD.

Turn outboard OFF while lever is in FORWARD.

Attempt to restart the outboard. Outboard should not start.

Pull shift lever back to NEUTRAL and restart outboard.

Shift remote control lever to REVERSE.

Turn outboard OFF while lever control is in REVERSE.

Attempt to restart the outboard. Outboard should not start.

Tachometer Pulse Setting

Confirm accuracy of tachometer reading.

- Adjust dial on back of tachometer to 6 pulse/12 pole setting.

Water Pump Overboard Indicator

A steady stream of water should flow from the overboard indicator.

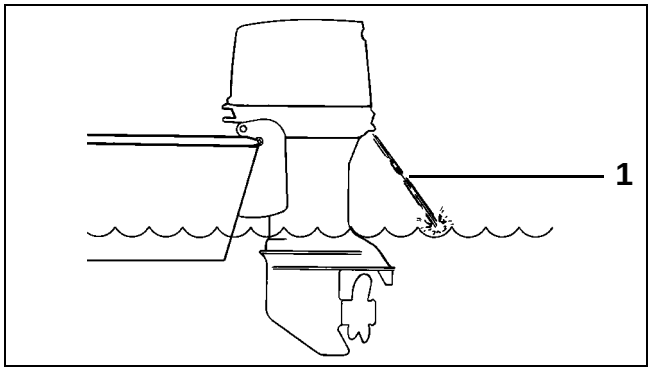

1. Water pump overboard indicator DRC4952

Operating Temperature

An outboard running at idle speed should achieve a temperature based on the engine's thermostatic control. In general, the powerhead temperature should reach at least 100°F (38°C) after five minutes of idling. Confirm that the powerhead reaches idle temperature.

PROPELLER SELECTION

Refer to **Propeller Hardware Installation** on p. 49 before installing propeller.

The correct propeller, under normal load conditions, will allow the engine to run near the midpoint of the RPM operating range at full throttle. Refer to **TECHNICAL DATA** on p. 16.

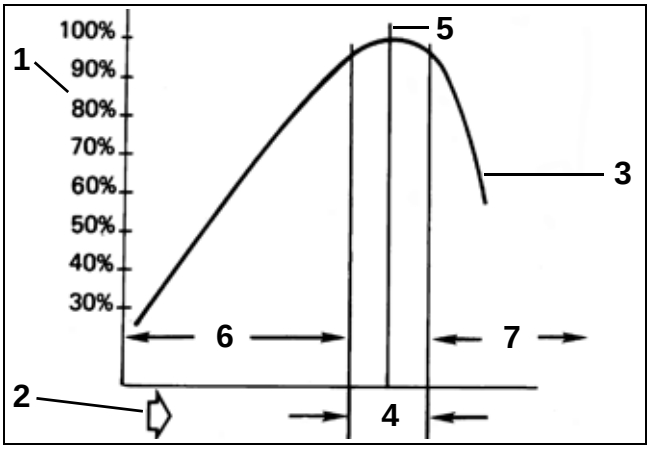

DR1261

1. *Percentage of horsepower (kw)*
2. *Engine RPM*
3. *Horsepower curve*
4. *Full throttle operating range*
5. *Midpoint of full throttle operating range, horsepower rating in kilowatts (kw))*
6. *Engine is overloaded at full throttle*
7. *Engine is overspeeding at full throttle*

CAUTION

Selection of the wrong propeller could reduce engine service life, affect boat performance, or cause serious damage to the powerhead.

Procedure

The propeller selection process is very important to the engine's service life and to boat performance. Proceed carefully and thoroughly while considering the following points:

- During the engine break-in period, run the outboard at wide-open throttle for only brief periods of time to check full-throttle RPM.
- Use an accurate tachometer to determine the engine's full-throttle RPM while testing various propellers.
- Select a propeller that suits the customer's application and allows the engine to run near the midpoint of the full-throttle operating range when the boat has a normal load in it. Refer to **TECHNICAL DATA** on p. 16.
- To compensate for changes in boat loading, the engine's full-throttle RPM must be verified periodically.

IMPORTANT: If the propeller blades have too much pitch, the engine is operating below its normal range at full throttle, power is being lost, and powerhead damage could occur. If the propeller blades have too little pitch, the engine is operating above its normal range at full throttle and damage from overspeeding could occur.

WARNING

When servicing the propeller, always shift the outboard to NEUTRAL, turn the key switch OFF, and twist and remove all spark plug leads so the engine cannot be started accidentally.

Propeller Hardware Installation

WARNING

When servicing the propeller, always shift the outboard to NEUTRAL, turn the key switch OFF, and twist and remove all spark plug leads so the engine cannot be started accidentally.

Apply *Triple-Guard* grease to the entire propeller shaft before installing the propeller.

Install thrust bushing onto propeller shaft with shoulder of thrust bushing facing aft. Taper of bushing must match taper of propshaft.

Install propeller on propeller shaft by aligning splines and pushing until seated on the thrust bushing.

IMPORTANT: Depending on propeller style, different thrust bushings, spacers, and cotter pin keepers are used. See the *Evinrude/Johnson Genuine Parts* book for a complete listing and descriptions.

Install the spacer, engaging the propeller shaft splines.

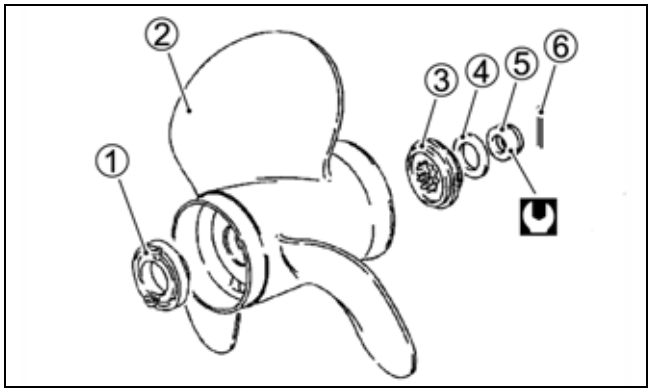

004361

1. *Thrust bushing*
2. *Propeller*
3. *Spacer*
4. *Washer*
5. *Propeller Nut*
6. *Cotter pin*

Wedge a block of wood between propeller blade and the anti-ventilation plate.

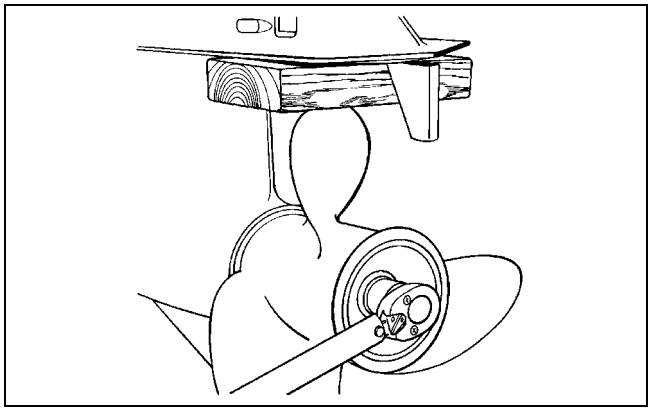

DRC3984

Install the propeller nut and torque to:

- 156 in. lbs. (18 N·m)

If cotter pin holes in the propeller nut and propeller shaft are not aligned, tighten the nut until they are in line. Do not loosen.

Insert a new cotter pin through the propeller nut and shaft. Bend its ends over the nut to secure the assembly.

IMPORTANT: After fastening propeller nut, make sure outboard is in NEUTRAL and carefully spin propeller. Propeller must turn freely and should not spin off center. If propeller appears to wobble, check for possible bent propeller shaft.

NOTES

Technician's Notes

Related Documents

Bulletins	
Instruction Sheets	
Other	

MAINTENANCE

TABLE OF CONTENTS

INSPECTION AND MAINTENANCE SCHEDULE 52
ENGINE SIDE COVERS 54
ANTI-CORROSION PROTECTION 54
SACRIFICIAL ANODES 54
METALLIC COMPONENT PROTECTION 55
EXTERIOR FINISH PROTECTION 55
BATTERY AND BATTERY CONNECTIONS 55
CARBURETORS 56
GENERAL 56
SYNCHRONIZING THE CARBURETOR THROTTLE VALVES 56
DASHPOT ADJUSTMENT 59
ENGINE OIL AND FILTER 60
CHECKING THE ENGINE OIL LEVEL 60
CHANGING THE ENGINE OIL AND FILTER 60
FUEL SYSTEM 62
HOSES AND CONNECTIONS 62
FUEL FILTER 62
GEARCASE 63
DRAINING 63
INSPECTION 63
FILLING 63
WATER INTAKE SCREENS 63
IDLE SPEED 64
IGNITION TIMING 65
OVERBOARD WATER PRESSURE INDICATOR 65
LUBRICATION POINTS 66
SPARK PLUGS 67
VALVE CLEARANCE 68
CHECKING 68
ADJUSTING 68

INSPECTION AND MAINTENANCE SCHEDULE

Routine inspection and maintenance is necessary for all mechanized products. Periodic maintenance contributes to the product's life span. The following chart provides guidelines for outboard inspection and maintenance to be performed by an authorized Dealer.

IMPORTANT: Outboards used for rental operations, commercial applications, or other high hour use applications require more frequent inspections and maintenance. Inspection and maintenance should be adjusted according to operating conditions and use; and environmental conditions.

Engine Maintenance and Inspection Schedule						
		Frequency				
Description	Engine Care Product	Each Use	10-Hour Inspection	Every 50 Hours or 6 months	Every 100 Hours or Annually	Every 200 Hours or Biannually
Clamp screws, lubricate (1)	D	Every 60 days / Every 30 days in Saltwater				
Tilt/run lever shaft / tilt shaft, lubricate (1)	D	Every 60 days / Every 30 days in Saltwater				
Swivel bracket / tilt support bracket, lubricate (1)	D	Every 60 days / Every 30 days in Saltwater				
Shift lever shaft and detent / shallow water drive bracket, inspect and lubricate (1)	D	Every 60 days / Every 30 days in Saltwater				
Engine cover latch, lubricate (1)	D	Every 60 days / Every 30 days in Saltwater				
Throttle and shift linkage, lubricate (1)	D	Every 60 days / Every 30 days in Saltwater				
Choke, carburetor linkage / starter lockout, inspect and lubricate (1)	D	Every 60 days / Every 30 days in Saltwater				
Fish line trap, inspect		Every 60 days / Every 30 days in Saltwater				
Anti-corrosion anodes, check operation		✓	✓			
Water intake screens, check condition		✓	✓			
Overboard water pump indicator, check operation		✓	✓			
Steering system, check operation		✓	✓			
Throttle and shift operation, check function		✓	✓			
Emergency stop circuit and lanyard, check function		✓	✓			
Cooling system, flush		✓				
Emergency start cord, onboard and inspect		✓				
Operator's Guide, onboard		✓				
Clamp screws, tighten		✓				
Engine covers, clean and wax				✓		
Fuel system components, inspect and repair leaks (2)			✓	✓		
Fastener inspection, tighten loosened components			✓	✓		
Engine to transom mounting hardware, re-torque			✓		✓	
Cam follower, inspect and lubricate			✓		✓	
Thermostat, inspect and check operation			✓		✓	
Electric starter, lubricate			✓		✓	

Engine Maintenance and Inspection Schedule						
		Frequency				
Description	**Engine Care Product**	**Each Use**	**10-Hour Inspection**	**Every 50 Hours or 6 months**	**Every 100 Hours or Annually**	**Every 200 Hours or Biannually**
Electrical and ignition wires and connections, inspect			✓		✓	
Carburetor synchronization and linkage, inspect and lubricate(2)	D		✓		✓	
Idle speed, check			✓		✓	
Valve clearance, check			✓		✓	
Gearcase lubricant, replace	B		✓		✓	
Engine oil, change	H		✓		✓	
Engine oil filter, replace			✓			✓
Fuel filter, replace			✓			✓
Gearcase lubricant, inspect fill level and condition	B			✓		
Starter pinion shaft, inspect and lubricate (3)	F			✓		
Operator's Guide, review					✓	
Propeller shaft splines, inspect and lubricate	D				✓	
Spark plugs, replace (2)					✓	
Decarbonize	G				✓	
Ignition timing, check					✓	
Driveshaft splines, inspect and lubricate	E					✓
Water pump and impeller, inspect/replace						✓

(1) Also recommended at 10-Hour Inspection

(2) Emission-related component

(3) Do not use light duty penetrating lubricants.

A *Evinrude/Johnson* Anti-Corrosion Spray or *Evinrude/Johnson* "6 in 1" Multi-Purpose Lubricant

B *HPF XR* gearcase lubricant

C Power Trim/Tilt Fluid

D *Triple-Guard* grease

E *Evinrude/Johnson Molylube* P/N 175356

F Starter Bendix Lube Only P/N 337016

G *Evinrude/Johnson* Engine Tuner

H *Evinrude/Johnson Ultra 4-Stroke* synthetic blend oil

ENGINE SIDE COVERS

Remove four (4) screws and the port side cover.

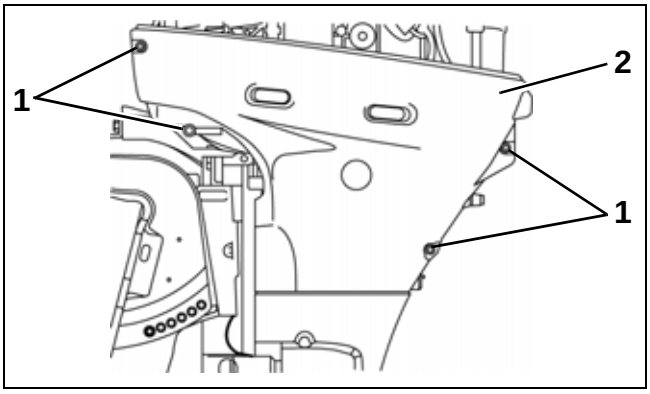

1. Screws (4) 001722
2. Port side cover

Remove two (2) screws and the starboard side cover.

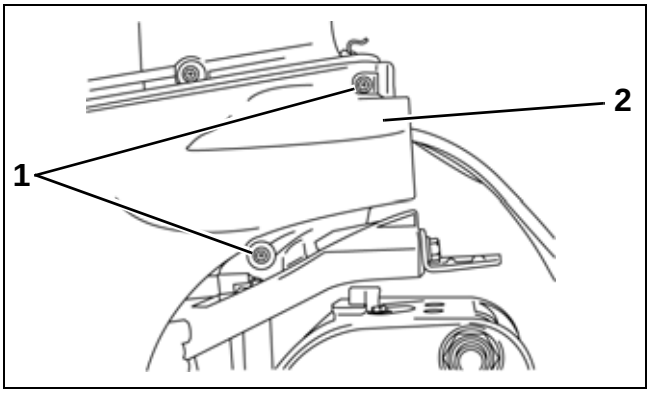

1. Screws (2) 001723
2. Starboard side cover

ANTI-CORROSION PROTECTION

Sacrificial Anodes

Galvanic corrosion occurs in fresh or salt water. Salt, brackish, and polluted water can accelerate corrosion. “Sacrificial” anodes are intended to protect the underwater metal components of the outboard from galvanic corrosion.

Inspect anodes and metal components below the water level. Erosion of anodes is normal and indicates that the anodes are functioning properly.

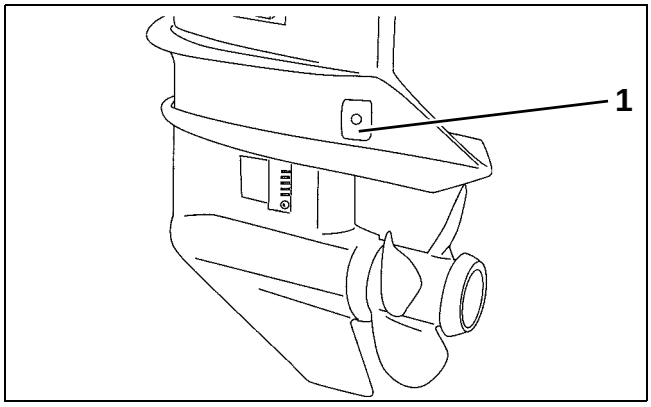

TYPICAL 000288R
1. Anode

Test Procedure – Continuity

Calibrate a multimeter on the “HIGH” ohm scale. Connect the black (–) tester probe to engine ground and the red (+) tester probe to the anode surface. The multimeter should indicate little or no resistance.

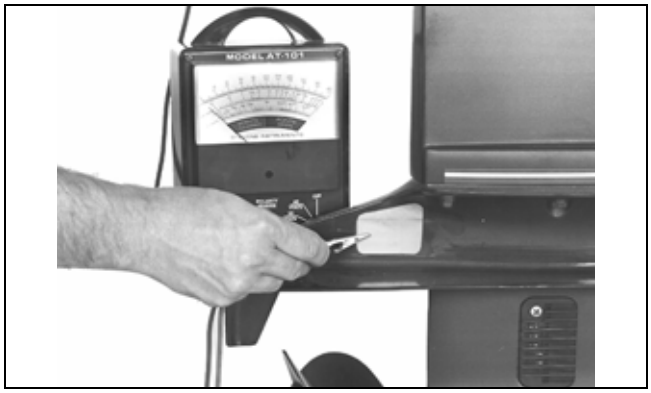

270757

IMPORTANT: Anodes that are not eroding may indicate that the anodes are not properly grounded. The anodes and mounting screws must be clean and tight for effective corrosion protection.

For best anode performance:

- Replace all anodes that have eroded or disintegrated to two-thirds of their original size.
- After installation, apply some *Gasket Sealing Compound* to the anode mounting bolt head.
- Do not paint or apply protective coatings to anodes or anode fasteners.
- Do not use metal-based anti-fouling paint on the boat or outboard.

Metallic Component Protection

Protect metal components on outboards from corrosion. Use the following products to minimize corrosion.

- *Anti-Corrosion Spray* provides a heavy, waxy coating to protect components.
- *"6 in 1" Multi-Purpose Lubricant* provides a thin film of anti-corrosion protection.

Exterior Finish Protection

Maintain the outboard's exterior finish to prevent corrosion and reduce oxidation.

- Use automotive wax to protect the outboard's exterior finish from oxidation.
- Clean regularly using clean water and mild detergent soap.
- Touch-up damage to painted surfaces promptly.
- Protect moving components with appropriate lubricants.

BATTERY AND BATTERY CONNECTIONS

WARNING

Battery electrolyte is acidic. Handle with care. Wear eye protection. If electrolyte contacts any part of the body, immediately flush with water and seek medical attention.

3

Check the battery connections frequently. Periodically remove the battery to clean and service the connections.

- Confirm that battery meets the minimum engine requirements.
- Connections must be clean and tight.
- Observe all wiring connections prior to disassembly.

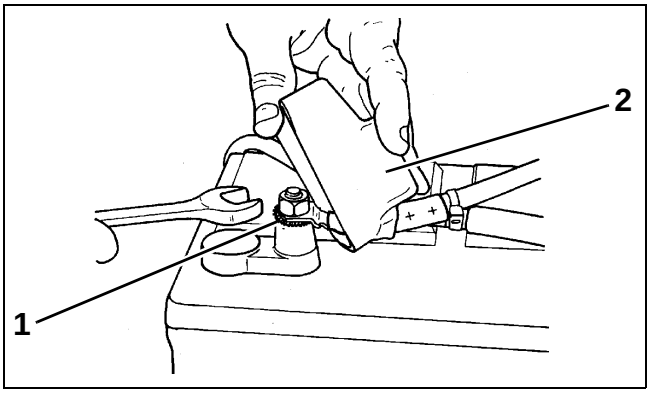

1. *Large surface star washer*
2. *Terminal cover*

DR5103

Remove the battery cables from battery. Always disconnect the negative (–) battery cable **first**.

Remove, clean, and service the battery according to the manufacturer's recommendations.

Clean the terminals, the battery posts, and the connectors with a solution of baking soda and water. A wire brush or battery terminal tool can be used to remove corrosion buildup. Rinse and clean all surfaces.

WARNING

Keep battery connections clean, tight, and insulated to prevent shorting or arcing, which can cause an explosion. If the battery mounting system does not cover the connections, install covers.

Install the battery. Connect the battery cables to the battery. Always connect the positive (+) battery cable **first**. Tighten all connections securely.

Coat all connections with *Triple-Guard* grease and insulate the electrical connections to prevent shorts or spark arcing.

CARBURETORS

General

Inspect the carburetor bodies, linkages, fuel inlet, and air silencer pipe for cracks and other damage. Replace any damaged components

The air silencer pipe minimizes audible noise related to air flow into the engine. It also collects any fluid residue that migrates from the leaf plate or the throttle body area. Periodically clean the air silencer pipe to remove any accumulations.

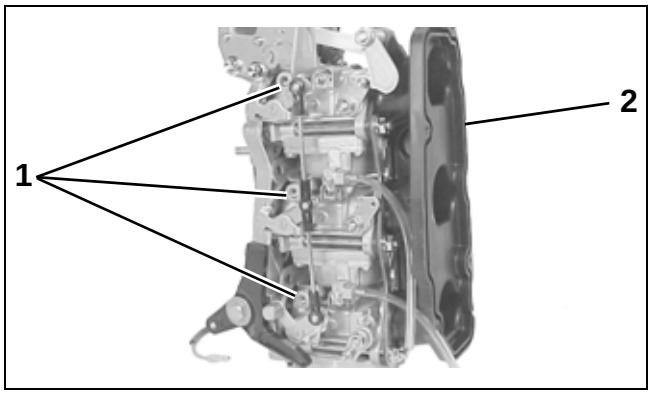

1. Carburetors (3) 001615
2. Air silencer pipe

Synchronizing the Carburetor Throttle Valves

IMPORTANT: Before synchronizing the throttle valves, check the link mechanism and the carburetor valves for smooth operation.

Remove the engine starboard side cover. Refer to “ENGINE SIDE COVERS” on page 54.

Remove the impulse plug of the No. 3 intake manifold.

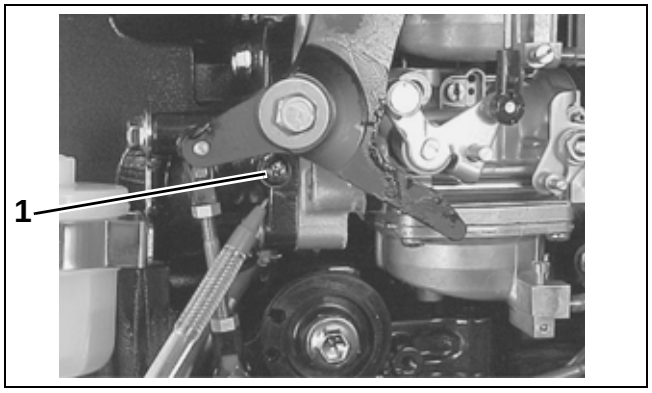

1. Impulse plug 001336

Install a carburetor synchronizer gauge adapter in the hole. Connect the hose of No. 3 tube in the carburetor synchronizer to the adapter.

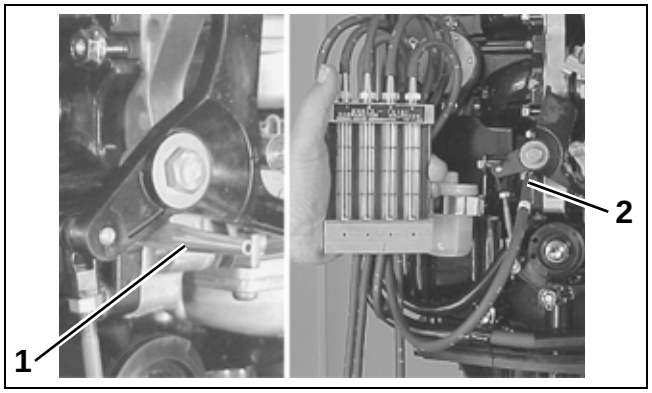

1. Gauge adapter 001337
2. No. 3 tube hose

Start the engine and allow the engine to warm up to normal operating temperature. Make sure that the choke valve is fully open.

Check the idle speed, then rotate the idle adjusting screw of the No. 3 carburetor to set the idle speed in neutral gear at 850 to 950 RPM.

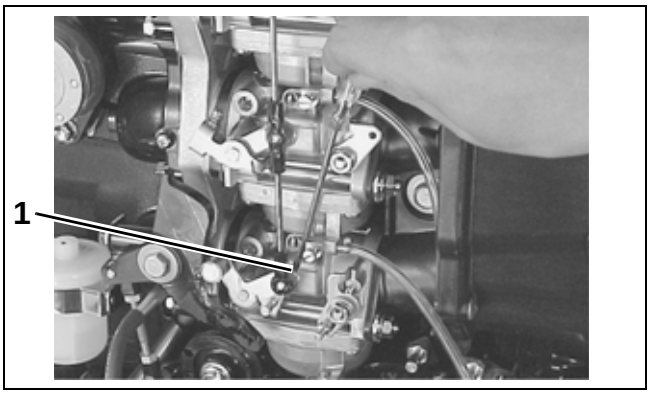

1. Idle adjusting screw 001338

Turn the balancer air screw until the steel ball is at the center line of the tube.

Repeat for the No. 1 and No. 2 synchronizer tubes.

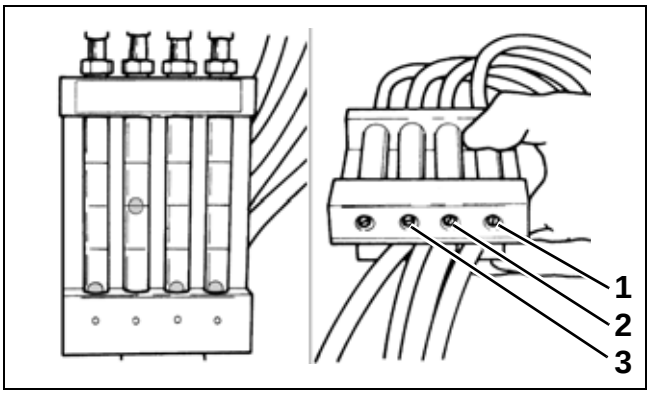

1. Balancer air screw - No. 1 tube 001339
2. Balancer air screw - No. 2 tube
3. Balancer air screw - No. 3 tube

Remove the impulse plugs from No. 1 and No. 2 intake manifolds, then install the carburetor synchronizer gauge adapters in these holes.

Connect each synchronizer tube hose to its corresponding adapter.

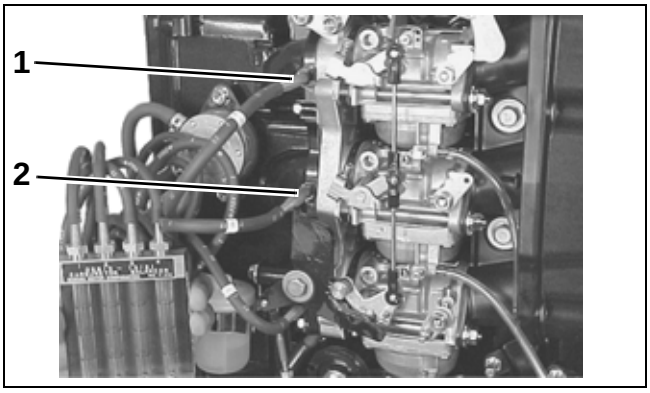

1. No. 1 intake manifold position
2. No. 2 intake manifold position
001342

Start the engine.

IMPORTANT: When synchronizing the throttle valves, only synchronize them in the idle position. With the engine warmed up and idling in neutral gear at 850 to 950 RPM, the steel balls must be at the same height in each of the tubes.

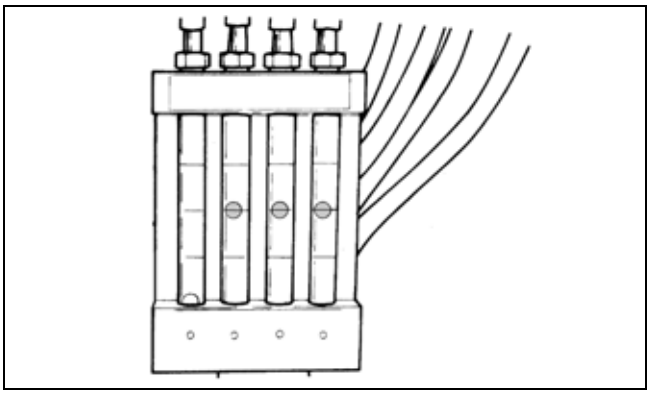

001343

Adjust the throttle valve screw(s) until the carburetors are synchronized (steel balls at the same height in each of the tubes) and the engine idles smoothly.

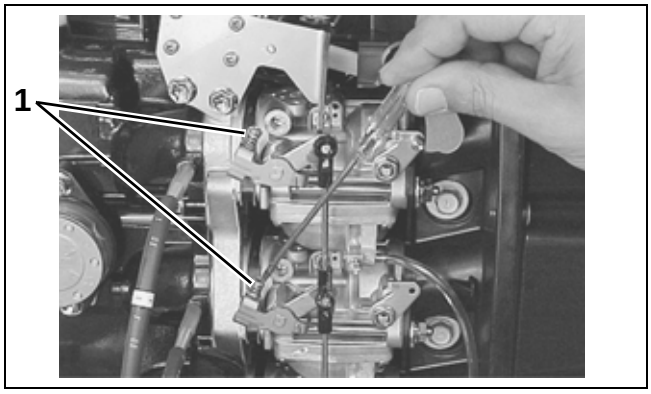

1. Throttle valve screw
001344

IMPORTANT: If the engine speed has been raised or lowered due to the adjustment, it is necessary to reset the engine to the specified idle speed by turning the idle adjusting screw of the No.3 carburetor.

Shift into FORWARD, then check the in-gear idle speed. This should be approximately 850 RPM.

Stop the engine. Remove the synchronizer gauge adapters and install the impulse plugs.

Dashpot Adjustment

The dashpot provides a controlled return to idle speed when the throttle is closed. A properly functioning and adjusted dashpot holds the engine speed briefly at approximately 1500 RPM, then slowly decelerates the engine to idle speed.

The dashpot's ability to perform a controlled return to idle as designed should always be checked and adjusted if necessary after synchronizing the carburetor throttle valves.

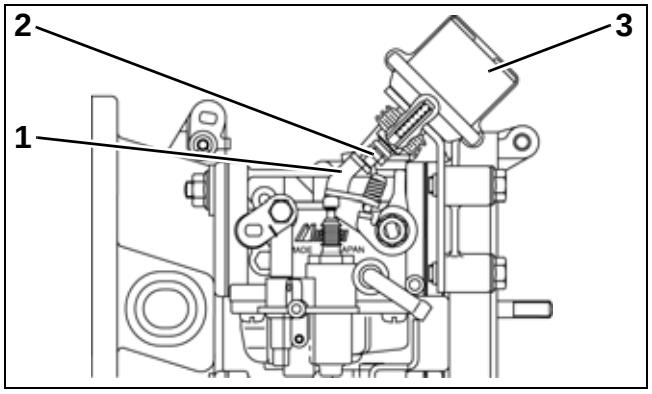

1. *Accelerator pump lever* 001345
2. *Rod*
3. *Dashpot unit*

Start the engine and allow the engine to warm up to normal operating temperature.

Turn the No. 3 carburetor idle adjusting screw to set engine speed at 4000 RPM. Count the number of turns it takes to achieve this speed from idle.

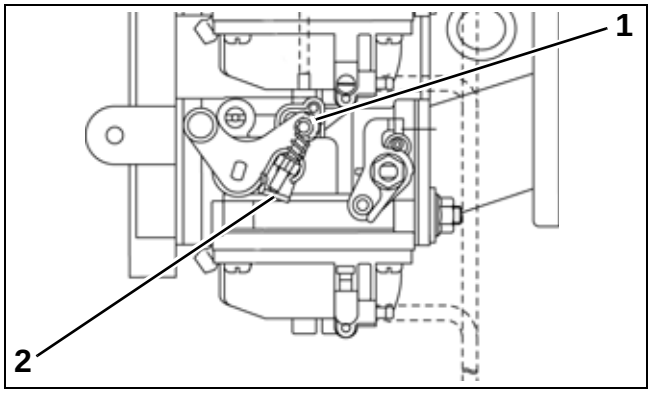

1. *Idle adjusting screw* 001346
2. *Throttle stop*

IMPORTANT: Dashpot adjustments must be made in neutral gear.

Stop the engine. Remove the flywheel cover or recoil starter.

Operate the throttle at the wide open position. Then return the throttle gradually to idle speed while watching the tip of the dashpot rod. The tip of the rod must contact the accelerator pump lever at the same time that the No 3 carburetor idle adjusting screw contacts the throttle stop.

If these two contacts do not occur at the same time, adjust the dashpot rod. Turning the rod clockwise moves the rod inward. Turning the rod counterclockwise moves the rod outward.

To reset the engine idle speed, return the No.3 carburetor idle adjusting screw to its original position according to the number of turns that were counted earlier.

Install the flywheel cover or recoil starter.

Start the engine and, if necessary, adjust the engine speed to the specified in-gear idle speed of approximately 850 RPM.

As a final adjustment check, shift into forward gear and quickly decelerate to full closed throttle from several different throttle positions. This checks the dashpot's ability to provide a controlled return to idle speed each time the throttle is closed.

ENGINE OIL AND FILTER

Checking the Engine Oil Level

IMPORTANT: Check the engine oil level before every use.

Place the engine upright on a level surface.

Remove the top engine cover.

Remove the oil level dipstick and wipe it with a clean rag. Then insert the dipstick completely into the dipstick hole and remove it.

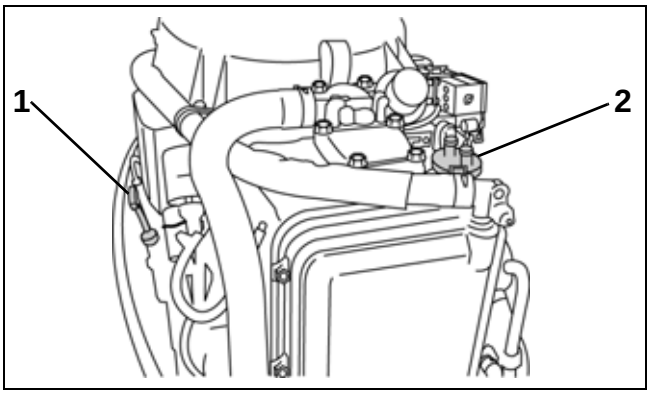

1. Oil level dipstick 001309
2. Oil filler cap

The oil level should be between the full mark and the low mark.

If the oil level is low, remove the oil filler cap and add the recommended oil. Check the oil level again.

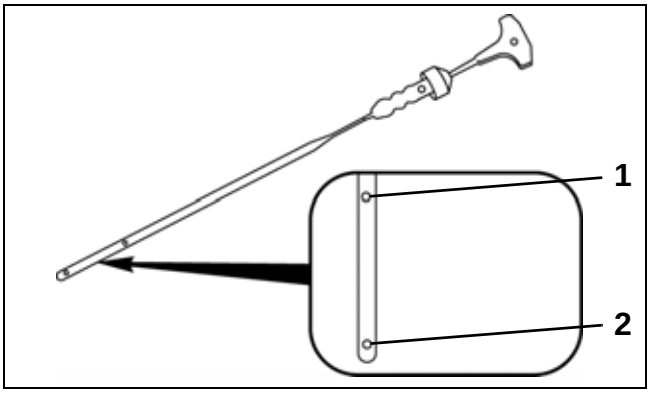

1. Full mark 001310
2. Low mark

Changing the Engine Oil and Filter

IMPORTANT: Whenever the engine oil filter is being replaced, change the engine oil at the same time. The engine oil should be changed while the engine is warm.

Draining

Place the engine upright on a level surface.

Remove the top engine cover.

Remove the oil filler cap.

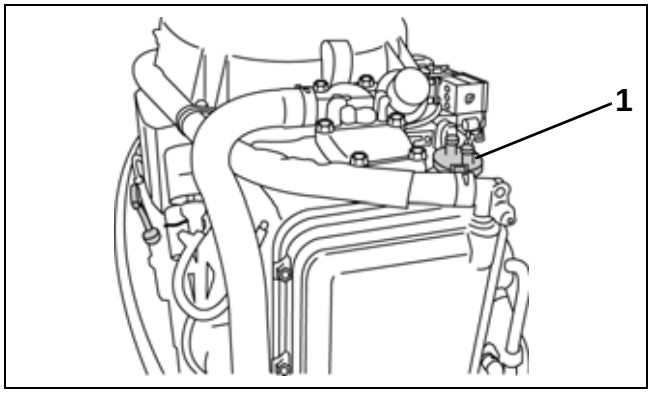

1. Oil filler cap 001309

Place a suitable container under the engine oil drain plug. Remove the drain plug and the gasket and allow the engine oil to drain into the container.

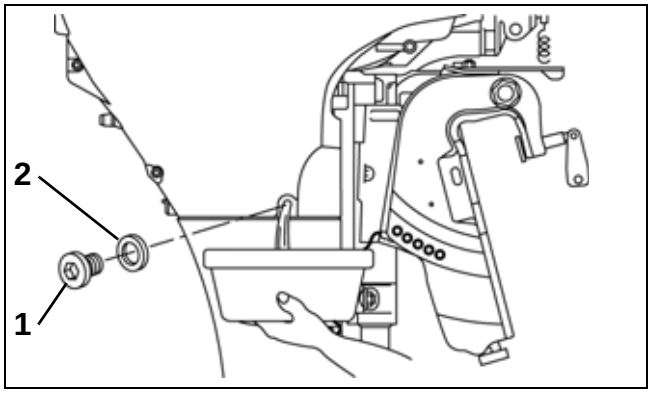

1. Oil drain plug 001312
2. Gasket

Oil Filter Replacement

Remove the engine port side cover. Refer to **ENGINE SIDE COVERS** on p. 54.

Use an oil filter wrench to loosen the oil filter.

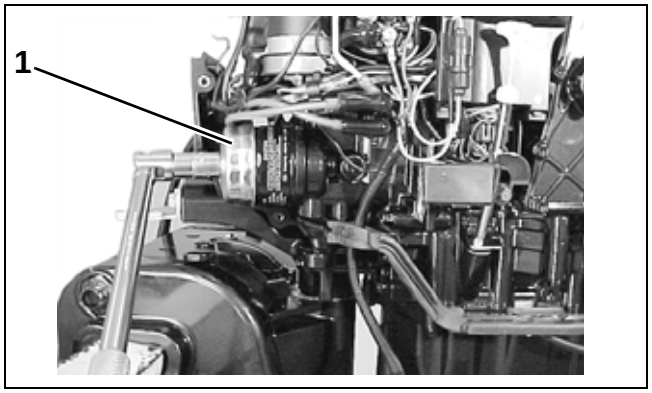

1. Oil filter wrench 001313

Apply oil to the O-ring of the new oil filter.

Screw the new filter on by hand until the O-ring contacts the filter mounting surface. Then use an oil filter wrench to tighten the filter by another 3/4 of a turn, or approximately 124 in. lbs. (14 N·m).

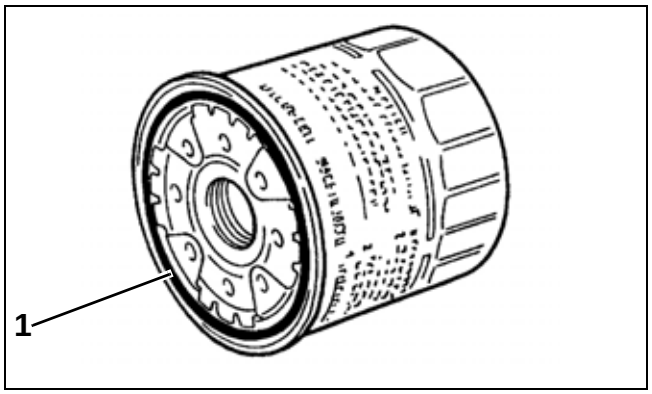

1. O-ring 001314

Install the engine port side cover.

Filling

Install a **new** gasket and the engine oil drain plug. Tighten the drain plug to a torque of 115 in. lbs. (13 N·m).

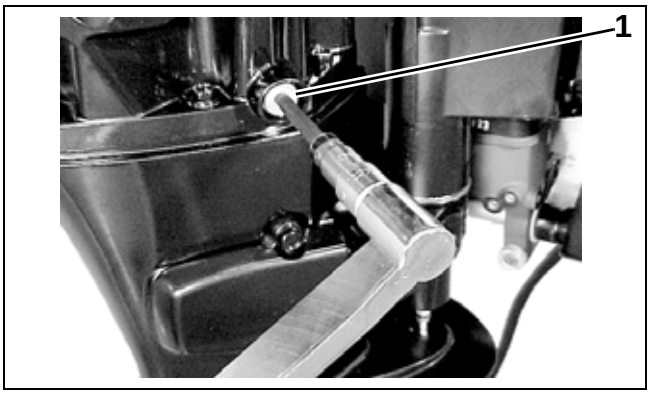

1. Oil drain plug 001316

Pour the correct amount of the recommended engine oil into the oil filler opening, then install the oil filler cap.

Engine Oil Capacities	
Oil change only	3.2 qt. (3.0 l)
Oil and filter change	3.4 qt. (3.2 l)

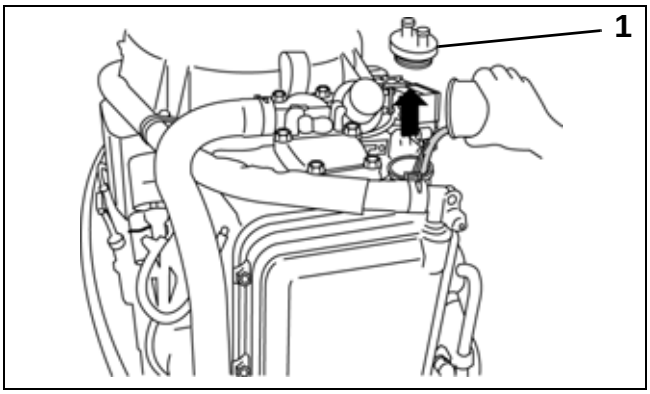

1. Oil filler cap 001311

Start and run the engine for several minutes at idle speed.

Check the oil filter for leakage.

Turn off the engine and wait for approximately two minutes, then check the engine oil level. Refer to **Checking the Engine Oil Level** on p. 60.

FUEL SYSTEM

Hoses and Connections

WARNING

Failure to check for fuel leakage could allow a leak to go undetected, resulting in fire or explosion.

Check the condition of all hoses and connections related to the fuel system. If any leakage, cracks, swelling, or other damage is found, replace the hose(s).

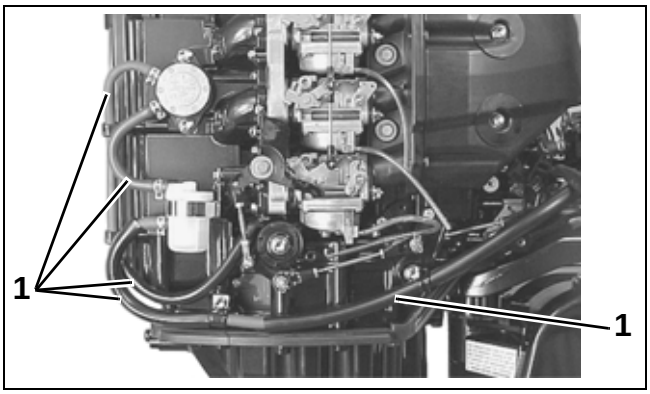

1. Fuel hoses 001362

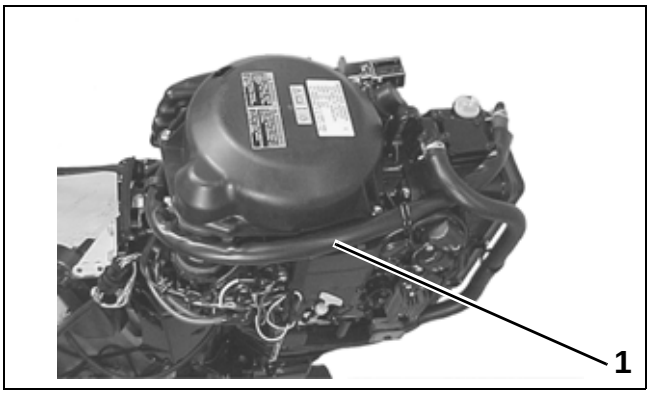

1. Breather hose 001363

Fuel Filter

If water accumulation, sediment, leakage, cracks, or other damage is found, replace the fuel filter.

To remove the fuel filter, disconnect the hoses from the filter and remove the filter from the bracket.

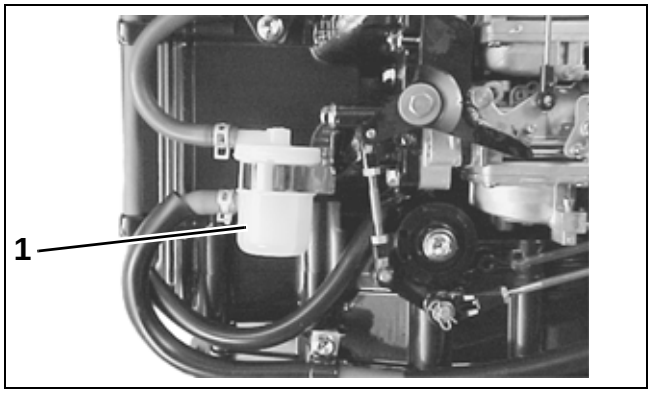

1. Fuel filter 001364

GEARCASE

Draining

WARNING

Gearcase lubricant may be under pressure and/or hot if plug is removed from recently operated outboard. Take precaution to avoid injury.

Remove the lubricant level plug, then the lubricant drain/fill plug. Allow the lubricant to drain from the gearcase into a suitable container.

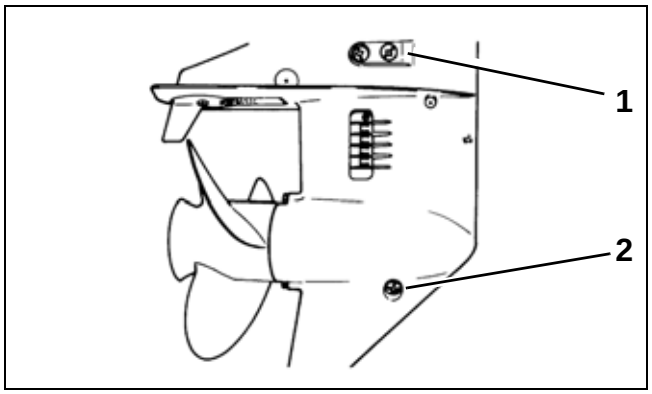

1. *Lubricant level plug*
2. *Lubricant drain/fill plug*

001825

Inspection

Inspect the lubricant for metal chips. The presence of metal **fuzz** usually indicates normal wear of the gears, bearings, and shafts within the gearcase. Metal **chips** might indicate extensive internal damage.

Inspect the lubricant for water contamination. Water in the lubricant can be milky in appearance. However, normal aeration can also cause the same appearance.

To check for water contamination, drain some of the lubricant into a suitable glass container. Allow the drained oil to settle for a minimum of one hour to determine whether there is an abnormal amount of water in the oil. Some gearcase lubricants are designed to mix with a volume percentage of water from normal water vapor condensation within the gearcase.

Overheated lubricant will give the lubricant a black color and burned odor.

Internal gearcase inspection is recommended when lubricant is contaminated or shows signs of failure.

Filling

Place the engine upright on a level surface.

Remove the lubricant level plug and the lubricant drain/fill plug.

Slowly fill the gearcase with *Evinrude/Johnson HPF XR* gearcase lubricant until it appears at the oil level hole. Filling the gearcase too quickly can cause air pockets within the gearcase, causing the gearcase to not fill completely. The gearcase oil capacity is approximately 8 fl. oz. (230 ml).

Clean the plug seal area. Install and tighten the lubricant level plug with a **new** seal, then install and tighten the lubricant drain/fill plug with a **new** seal.

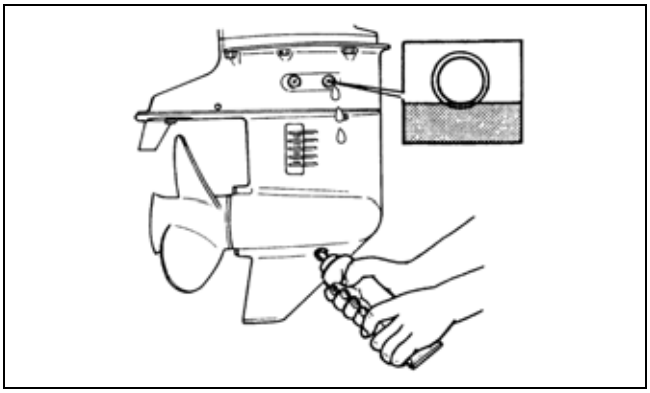

001318

Water Intake Screens

Inspect the condition of the water intake screens. Clean or replace as needed.

IDLE SPEED

IMPORTANT: Before synchronizing the throttle valves, check the link mechanism and the carburetor valves for smooth operation.

Start the engine and allow the engine to warm up to normal operating temperature.

Connect a tachometer to the engine in the following manner:

- Yellow lead wire to Yellow / Black lead wire of the power pack
- Gray lead wire to the positive (+) terminal of a 12V battery
- Black lead wire to the negative (–) terminal of a 12V battery
- Set the pole selection switch in the tachometer to “12”.

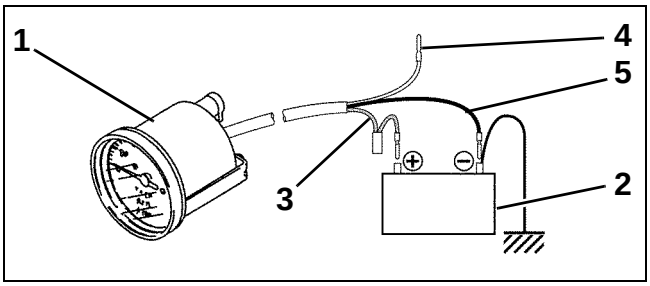

1. Tachometer 001331
2. 12V battery
3. Gray lead wire
4. Yellow lead wire
5. Black lead wire

Check the idle speed after the engine speed has stabilized. The idle speed in NEUTRAL should be 850 to 950 RPM.

IMPORTANT: Before adjusting idle speed, make sure that the carburetor throttle valves are properly synchronized. Refer to “Synchronizing the Carburetor Throttle Valves” on page 56.

If the idle speed is out of specification, adjust the idle speed by rotating the idle adjusting screw only. DO NOT rotate the throttle valve screws on the No. 1 or No. 2 carburetors.

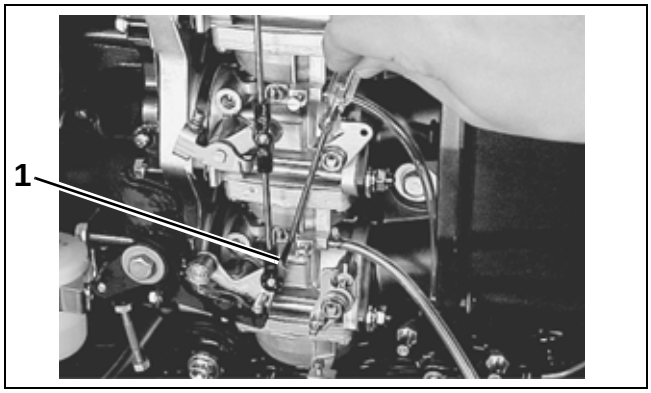

1. Idle adjusting screw 001334

IGNITION TIMING

Start the engine and allow the engine to warm up to normal operating temperature.

Make sure that the idle speed is adjusted properly. Refer to “IDLE SPEED” on page 64.

Attach a timing light cord to the No. 1 ignition coil high tension cord.

Check the ignition timing while operating the engine at 900 RPM. The timing should be approximately BTDC 5°.

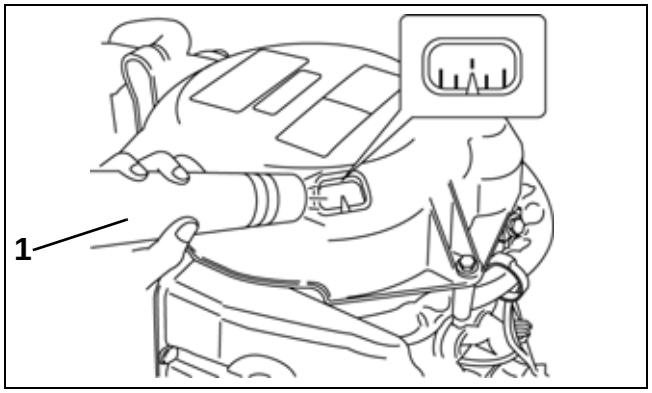

1. Timing light 001361

OVERBOARD WATER PRESSURE INDICATOR

Check the function of overboard water pressure indicator. Clean or replace the hose or nozzle as needed.

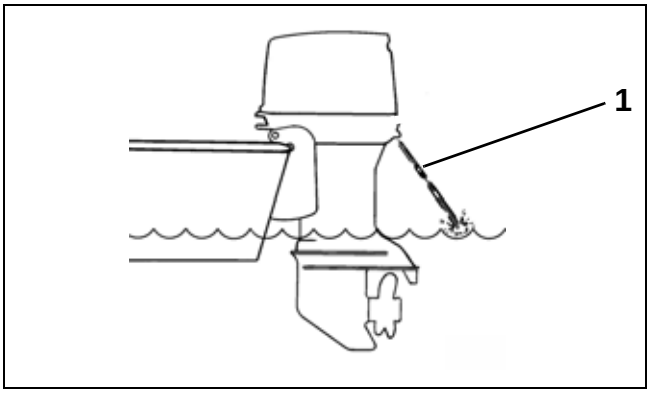

1. Overboard water pressure DRC4952

LUBRICATION POINTS

Apply *Triple-Guard* grease to the following lubrication points.

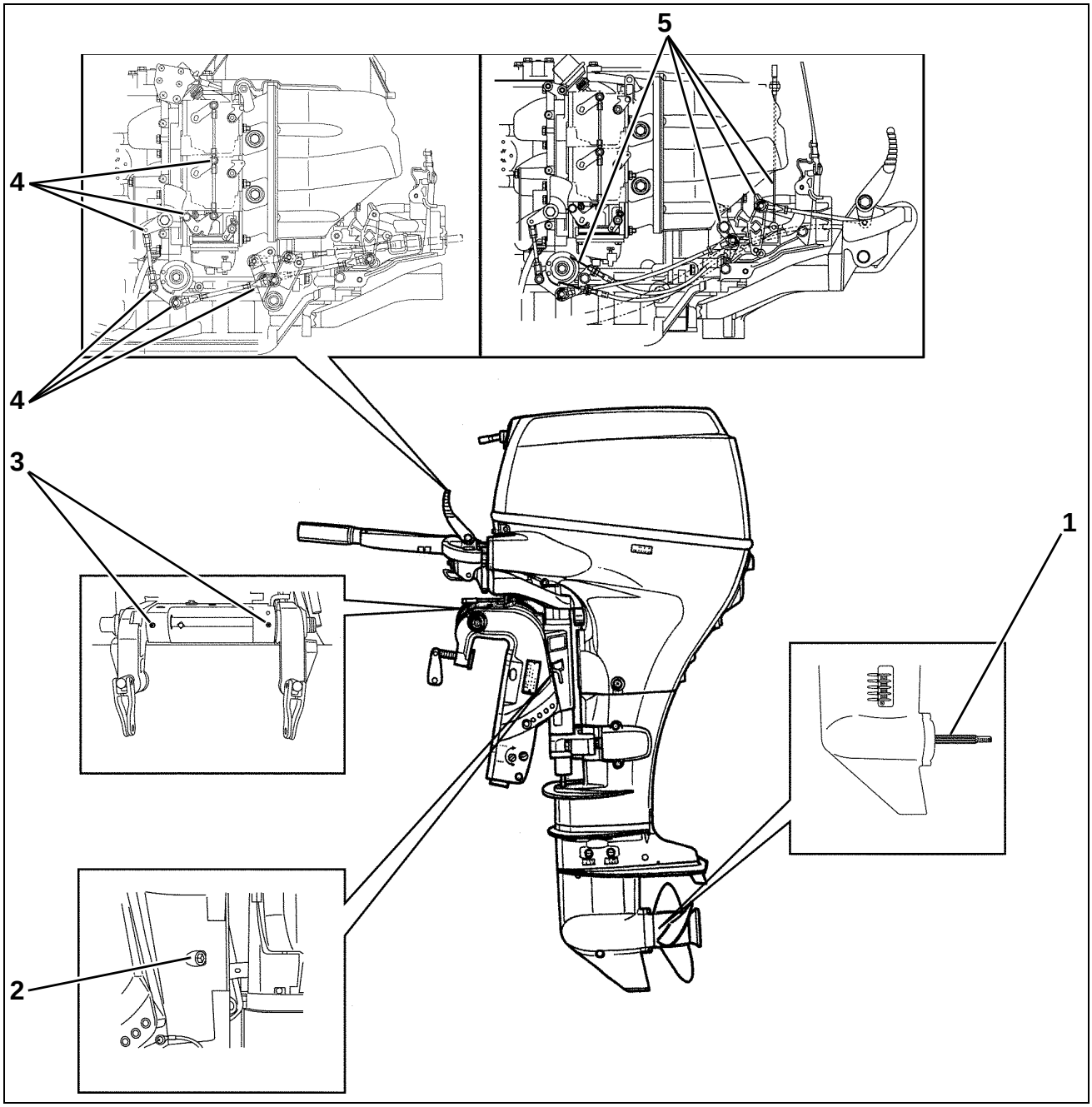

001380

1. *Propeller shaft*
2. *Swivel bracket*
3. *Tilt tube*
4. *Throttle/shift linkage*
5. *Throttle/shift linkage (additional points for tiller handle models)*

SPARK PLUGS

CAUTION

Only use resistor (R) type spark plugs with this engine. Using a non-resistor spark plug will cause ignition system malfunctions.

Standard spark plug: NGK DCPR6E

Remove the spark plug.

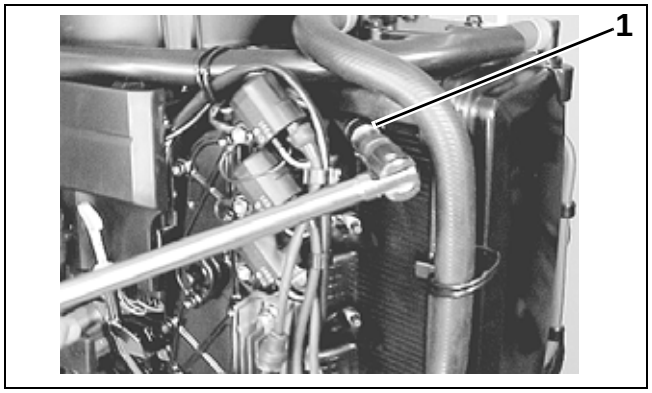

1. Spark plug 001319

Check the electrode. If it is extremely worn or burnt, replace the spark plug. Also, replace the spark plug if it has a broken insulator or damaged threads.

Check for carbon deposits on the spark plug bases. If carbon is present, remove it with a spark plug cleaning machine or by carefully using a pointed tool.

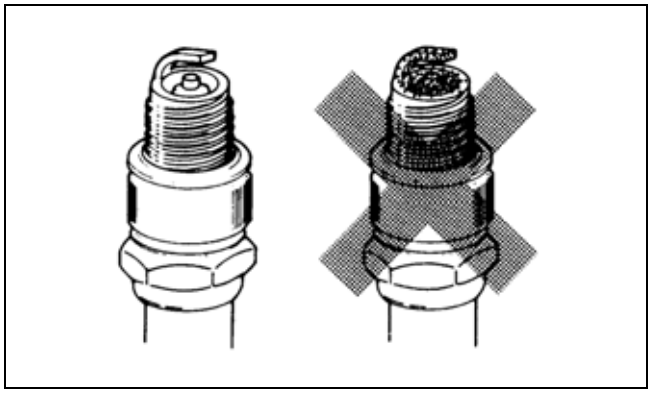

001320

Use a thickness gauge to measure the spark plug gap. The correct gap is 0.031 to 0.035 in. (0.8 to 0.9 mm).

If the gap is out of specification, adjust it within the specified range.

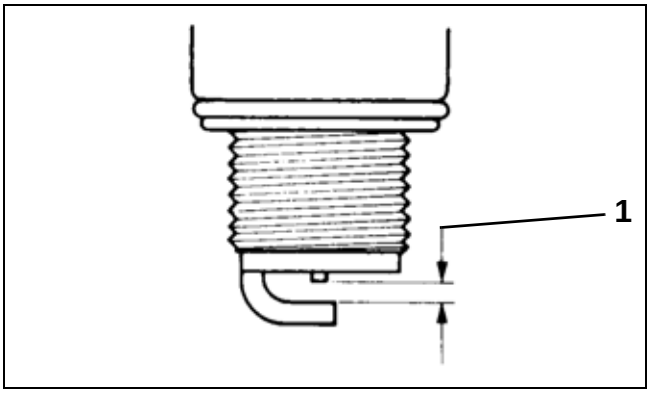

1. Spark plug gap 001322

CAUTION

Confirm the thread size and reach when replacing the spark plug. If the reach is too short, carbon will be deposited on the threaded portion of the plug hole, resulting in possible engine damage.

During installation, tighten the spark plug to a torque of 160 in. lbs. (18 N·m).

Before installing the spark plug lead cover on the spark plug, apply a light coating of *Electrical Grease* to the ribbed portion of the spark plug ceramic and to the opening of the spark plug cover. This will help prevent corrosion between the spring terminal and the spark plug which can cause high tension arcing.

VALVE CLEARANCE

Checking

IMPORTANT: The engine must be cold when checking the valve clearance.

Remove the engine side covers. Refer to “ENGINE SIDE COVERS” on page 54.

Remove the manual starter or flywheel cover, and the cylinder head cover. Refer to the **POWER-HEAD** section.

CAUTION

Rotate the crankshaft clockwise to prevent damage to the water pump impeller.

Rotate the crankshaft **clockwise** until the No. 1 piston is at TDC on its compression stroke.

Measure the valve clearances for the No. 1 cylinder by inserting a thickness gauge between the valve stem end and the valve adjusting screw on the rocker arm. For both intake and exhaust valves, the valve clearance should be 0.005 to 0.007 in. (0.13 to 0.17 mm).

If any valve is out of specification, adjust the valve clearance.

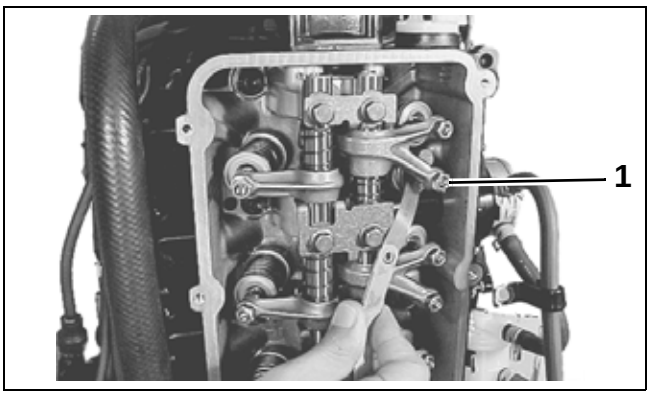

1. Valve 001327

Rotate the crankshaft **clockwise** and repeat the procedure for the other two cylinders in turn.

Adjusting

Loosen the locknut. Use a screwdriver to turn the valve adjusting screw to bring valve clearance to within the specification.

Hold the adjusting screw in place and tighten the locknut to a torque of 97 in. lbs. (11 N·m).

Check the valve clearance again.

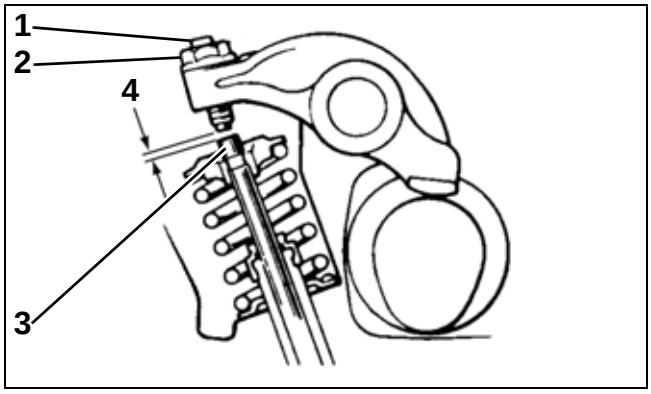

1. Valve adjusting screw 001326
2. Locknut
3. Valve stem
4. Valve clearance

ENGINE CONTROL

TABLE OF CONTENTS

COMPONENTS 70
FLYWHEEL 70
CHARGE COIL 70
CRANKSHAFT POSITION VCSENSOR (CPS) 70
POWER PACK 70
EMERGENCY STOP SWITCH 71
IGNITION COIL 71
OPERATION 72
TROUBLESHOOTING 73
IGNITION TESTS 74
IGNITION COIL RESISTANCE TEST 74
CHARGE COIL TESTS 75
CRANKSHAFT POSITION SENSOR (CPS) COIL TESTS 75
POWER PACK CRANKING OUTPUT TEST 77
EMERGENCY STOP SWITCH CONTINUITY TEST 77
CAUTION SYSTEMS 78
OPERATION 78
TEST PROCEDURES 79
REMOVAL AND INSTALLATION 80
FLYWHEEL 80
CHARGE COIL AND CRANKSHAFT POSITION SENSORS 81
OIL PRESSURE SWITCH 82

COMPONENTS

Flywheel

The flywheel contains permanent magnets which energize the charge coil, the crankshaft position sensor (CPS) coils, and the alternator stator. Once the flywheel exceeds a minimum cranking RPM, the flywheel's magnetic lines of force pass through the ignition plate components to produce voltage in those circuits.

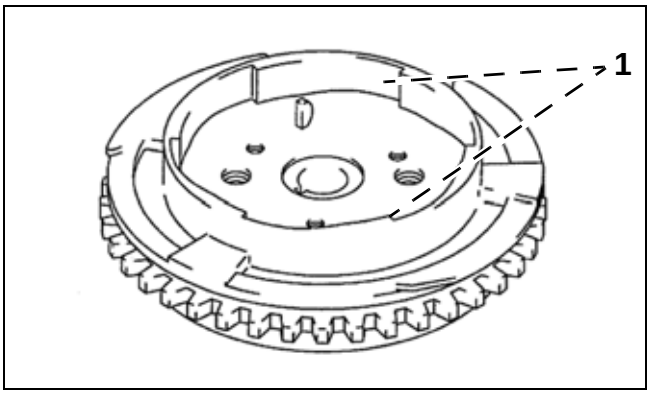

1. Permanent magnets (Not shown) 001851

Charge Coil

The charge coil consists of many windings of wire wrapped around a metal lamination. Once the flywheel exceeds a minimum cranking RPM, the flywheel's magnetic lines of force pass through the charge coil windings to produce approximately 300 V of alternating current. This voltage is supplied to the power pack to operate the system.

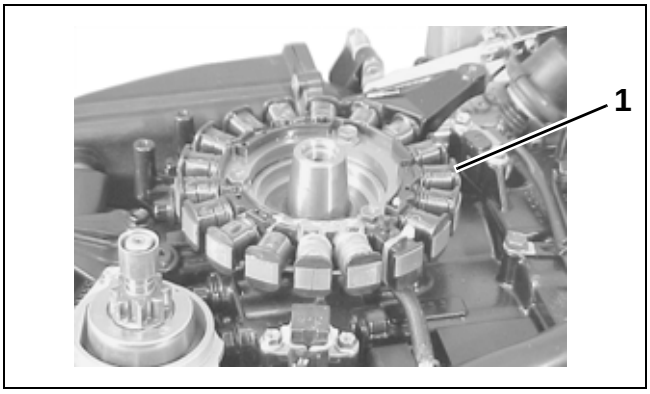

1. Charge coil 001653

Crankshaft Position Sensor (CPS)

There are two crankshaft position sensors installed below the flywheel rotor. When the reluctor bar on the flywheel passes the sensors, a signal (voltage pulse) is generated and sent to power pack. This is the basic signal that is used to determine the engine speed and the crankshaft angle. The sensors send a basic signal to the power pack for determining the ignition timing.

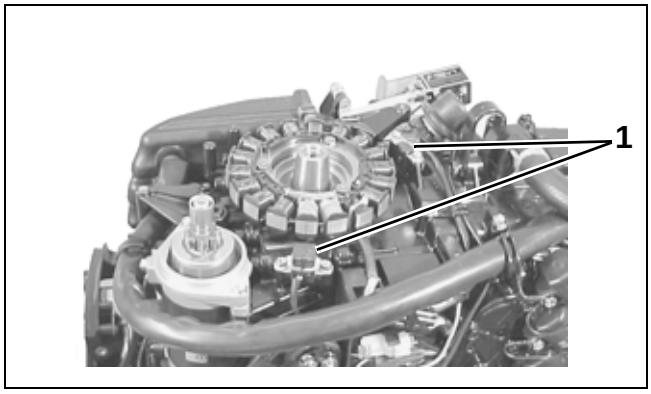

1. Crankshaft position sensors 001654

Power Pack

The power pack has several basic functions. It stores and distributes the voltage received from the charge coil and operates the caution system. The power pack uses electronic switches (SCRs), activated by crankshaft position sensors output, to select the correct ignition coil primary winding for firing.

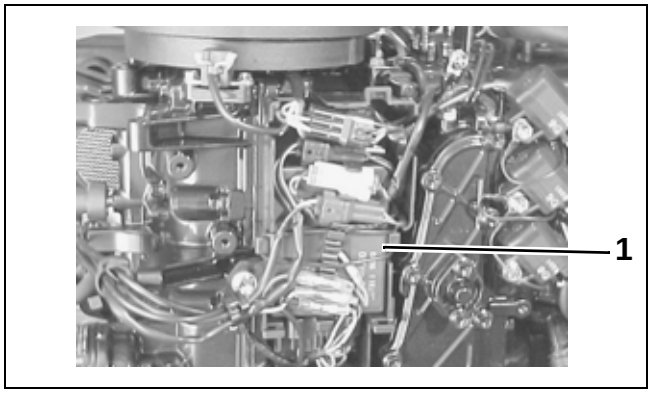

1. Power pack 001655

Emergency Stop Switch

The emergency stop switch is connected to the power pack through the engine wiring harness. When activated, this switch directs the power pack output to ground, stopping the ignition system.

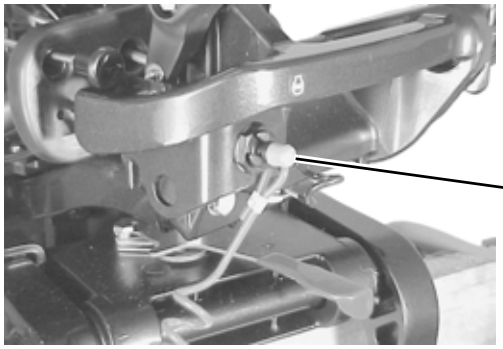

1. Emergency stop switch 001656

When the clip and lanyard assembly is **removed**, the emergency stop switch is in the STOP position.

When the clip and lanyard assembly is **installed**, the emergency stop device is in the RUN position.

Ignition Coil

The ignition coil consists of two windings of wire wrapped around a compacted ferrite core. The coil has primary and secondary terminal connections and a ground plate.

Through mutual induction, the ignition coil transforms the ignition module output to as much as 40,000 V to fire the spark plugs. There is one ignition coil per cylinder.

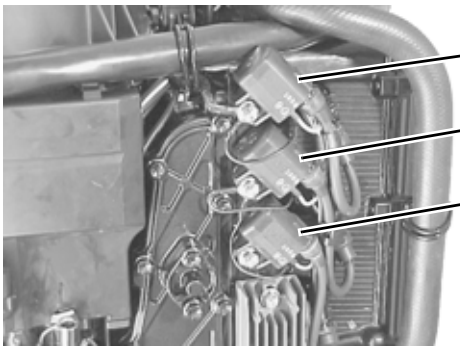

1. Ignition coil No. 1 001652
2. Ignition coil No. 2
3. Ignition coil No. 3

OPERATION

The ignition system is a condenser discharge type system. The condenser built into the power pack stores the electrical energy generated by the battery charge coil.

The ignition timing varies based upon engine speed. When cranking, the ignition timing is fixed at BTDC 5° until the engine starts. During normal operation, the ignition timing varies according to the engine model and engine operating condition.

The CPSs monitor engine speed and send signals to the power pack. Based on these signals, the power pack determines the optimum ignition timing and supplies voltage stored in the condenser to the ignition coil primary windings.

Specifications	
Advance	Electronic microcomputer control
Ignition timing	**Model 30:** BTDC 5° - 29°
Firing order	1 - 3 - 2

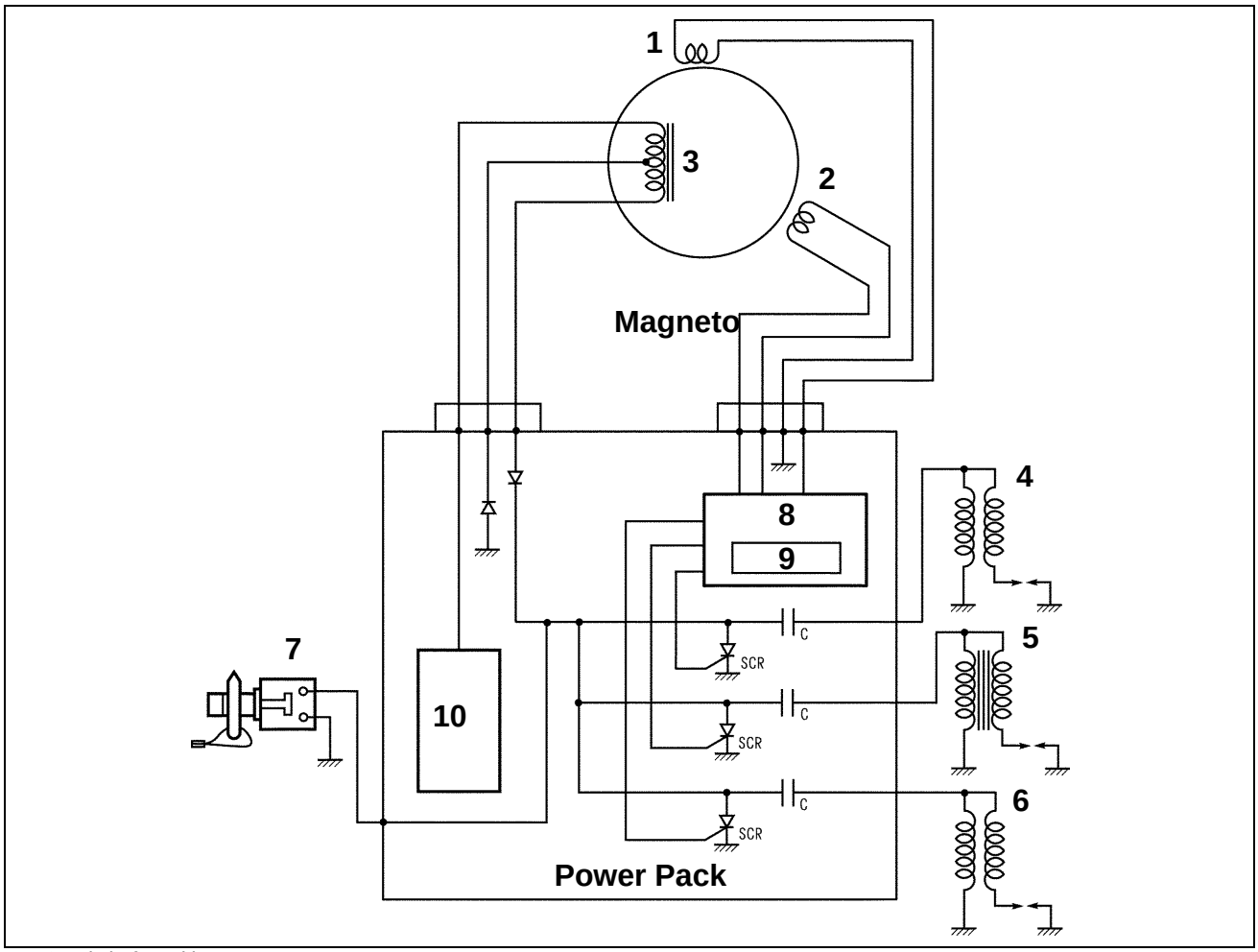

001657

1. *Crankshaft position sensor No. 1*
2. *Crankshaft position sensor No. 2*
3. *Power source coil*
4. *Ignition coil No. 1*
5. *Ignition coil No. 2*
6. *Ignition coil No. 3*
7. *Engine stop switch*
8. *Ignition control circuit*
9. *CPU*
10. *Power source circuit*

TROUBLESHOOTING

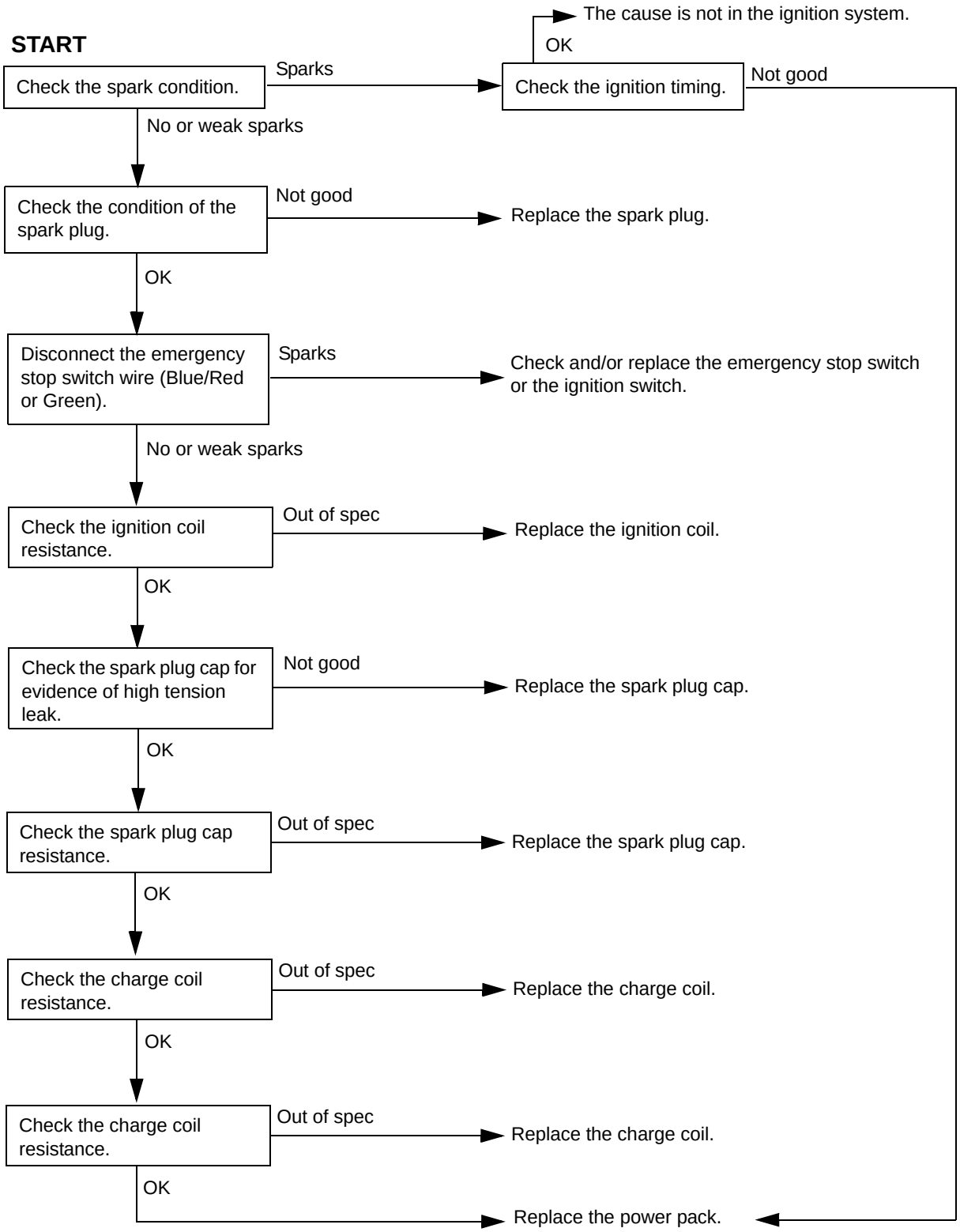

4

IGNITION TESTS

WARNING

Before working on or removing any electrical parts, disconnect the battery cables at the battery to prevent electrical sparks.

Twist and remove all spark plug leads to avoid accidental starting.

All cranking output tests must be performed with spark plugs installed and torqued in the cylinder head. If it is necessary to remove the spark plugs, be sure to keep the spark tester away from open spark plug holes.

Ignition Coil Resistance Test

Primary Side

Disconnect the primary coil lead wires from the power pack. Connect an ohmmeter between the primary coil lead wires.

If the measurement is out of specification, replace the ignition coil.

Primary Ignition Coil Resistance Test		
Tester probe connection		Resistance
Red (+)	Black (–)	
White	Black	0.17 to 0.23 ohms

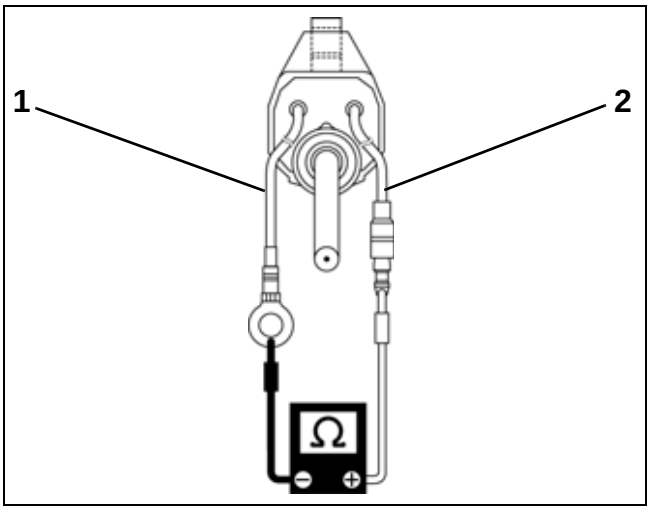

1. *Black wire*
2. *White wire*

001658

Secondary Side

Remove the spark plug cap from the high tension cord. Connect an ohmmeter between the black ignition coil lead wire and the high tension cord.

If the measurement is out of specification, replace the ignition coil.

Secondary Ignition Coil Resistance Test		
Tester probe connection		Resistance
Red (+)	Black (–)	
High tension cord	Black	4.8 to 7.2 kilohms

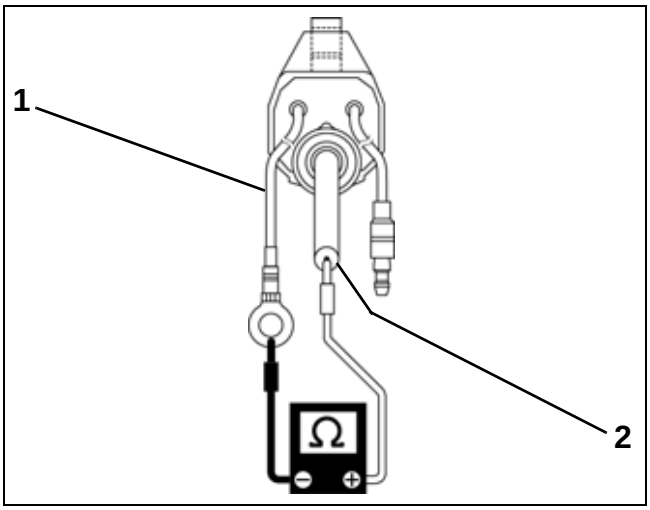

1. *Black wire*
2. *High tension cord*

001659

Spark Plug Cap

Remove the spark plug cap from the high tension cord. Connect an ohmmeter between the contact ends of the cap.

The resistance should be 4 to 6 kilohms. If the measurement is out of specification, replace the spark plug cap.

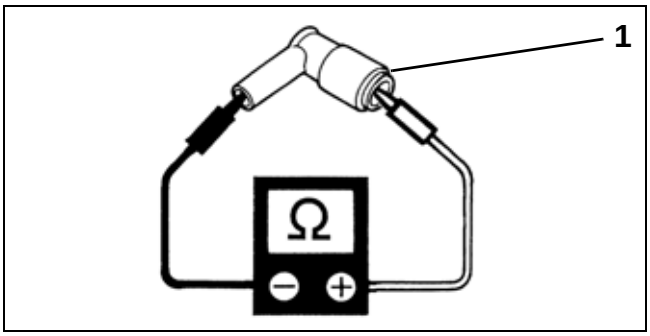

1. *Spark plug cap*

001660

Charge Coil Tests

Resistance

Disconnect the charge coil lead wire from the power pack. Connect an ohmmeter between the charge coil leads.

If the measurement is out of specification, replace the charge coil.

Charge Coil Resistance Tests			
	Tester probe connection		
	Red (+)	**Black (–)**	**Resistance**
Test 1	White	Green	10.1 to 15.1 ohms
Test 2	Brown	Green	

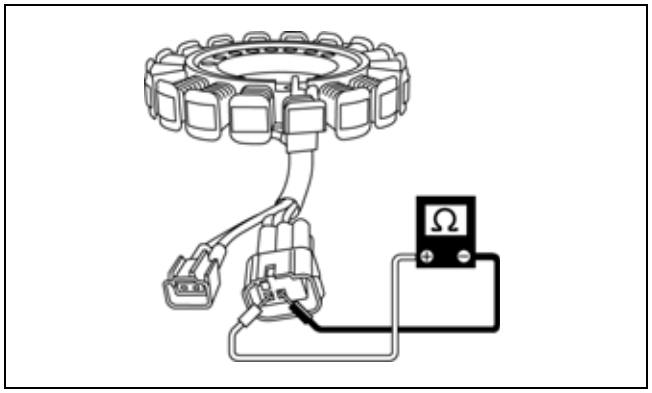

001661

Cranking Output

Disconnect the charge coil lead wire from the power pack. Connect a 6 pin test cord, P/N 5034618, as shown. Connect a peak voltage tester between the charge coil leads.

Remove all spark plugs.

Measure the charge coil output at cranking. If the measurement is out of specification, replace the charge coil.

Charge Coil Cranking Output Tests			
	Tester probe connection		
	Red (+)	**Black (–)**	**Resistance**
Test 1	White	Green	21V or more
Test 2	Brown	Green	

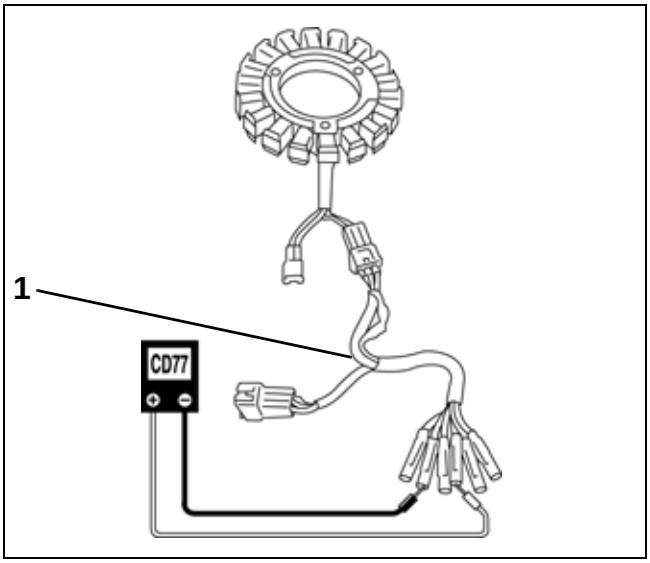

1. 6 pin test cord 001663

Crankshaft Position Sensor (CPS) Coil Tests

Resistance

Disconnect the CPS lead wire from the power pack. Connect an ohmmeter between the sensor coil leads as shown.

If the measurement is out of specification, replace the sensor.

CPS Coil Resistance Tests			
	Tester probe connection		Resistance
	Red (+)	Black (–)	
Test 1	White	Green	148 to 222 ohms
Test 2	Brown	Green	

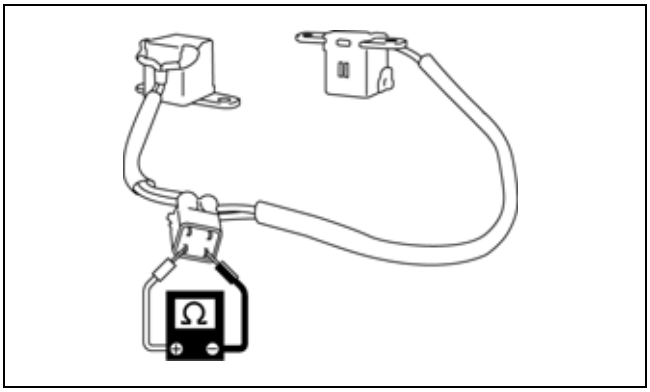

001662

Cranking Output

Disconnect the CPS lead wire from the power pack. Connect a 4 pin test cord, P/N 5034228, as shown. Connect a peak voltage tester between the sensor coil leads as shown.

Remove all spark plugs.

Measure the sensor coil output at cranking. If the measurement is out of specification, replace the sensor.

CPS Coil Cranking Output Tests			
	Tester probe connection		Resistance
	Red (+)	Black (–)	
Test 1	White	Green	3V or more
Test 2	Brown	Green	

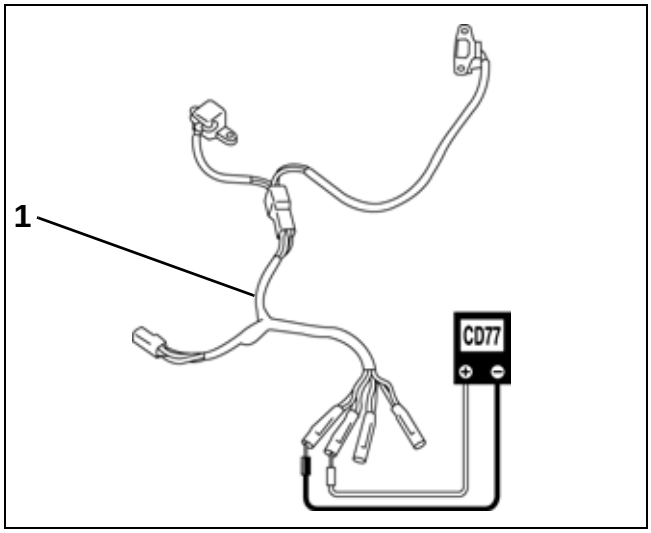

1. 4 pin test cord 001664

Power Pack Cranking Output Test

Connect the ignition coil lead wires to the power pack. Connect a peak voltage tester to the ignition coil primary lead wires.

Remove all spark plugs.

Measure the power pack output at cranking. If the measurement is out of specification, replace the power pack.

Power Pack Cranking Output Test			
Ignition coil	Tester probe connection		Output
	Red (+)	Black (–)	
No. 1	Orange	Black	64V or more
No. 2	Blue	Black	
No. 3	Light green	Black	

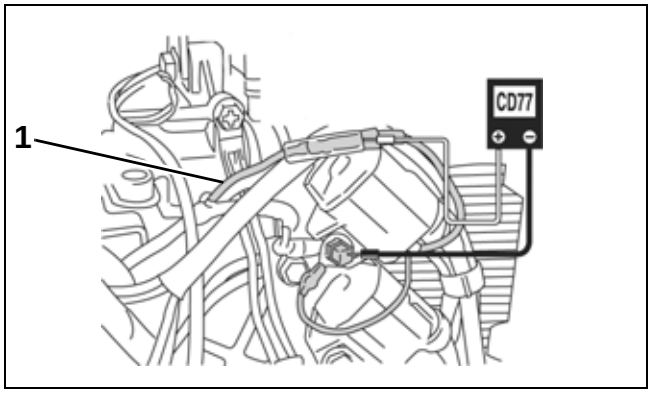

1. Ignition coil primary lead wire 001665

Emergency Stop Switch Continuity Test

Disconnect the emergency stop switch lead wire. Check for continuity between the switch leads.

If the measurement is out of specification, replace the emergency stop switch.

Emergency Stop Switch Continuity Test (Tiller handle models)			
Condition	Tester probe connection		Result
	Red (+)	Black (–)	
Lock plate installed	Blue/Red	Black	Infinity
Lock plate removed			Continuity
Lock plate installed / stop button depressed			Continuity

Emergency Stop Switch Continuity Test (Remote control models)			
Condition	Tester probe connection		Result
	Red (+)	Black (–)	
Lock plate installed	Green	Black	Infinity
Lock plate removed			Continuity

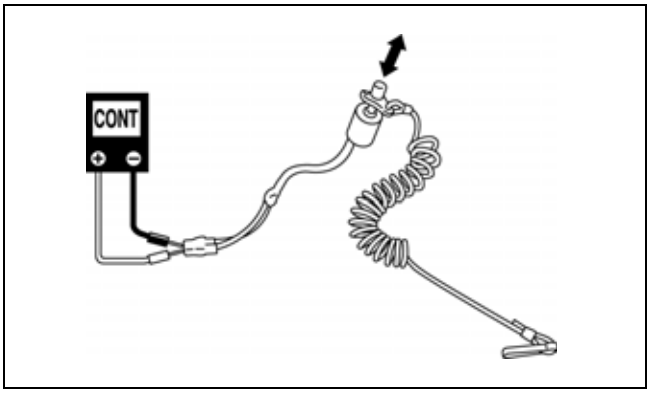

001666

CAUTION SYSTEMS

There are three caution systems that alert the operator when an abnormality occurs on the engine:

- Over-revolution caution system
- Low oil pressure caution system
- Overheat caution system

A caution lamp will be illuminated when an abnormality occurs and the appropriate caution system is activated.

On remote control models, a buzzer will also sound for a low oil pressure or overheat caution.

To check the caution lamp (and the buzzer, on remote control models), start the engine. Two seconds after starting, the caution lamp should come on (and, on remote control models, the buzzer should sound).

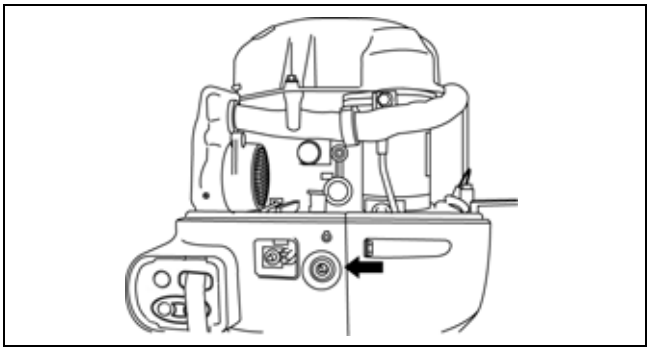

001668

Operation

Over-revolution Caution System

The over-revolution caution system is activated when the engine speed that is calculated by the power pack exceeds the preset maximum engine speed setting.

Maximum Engine Speed Settings	
30 HP	6500 RPM

If the engine is operated above the maximum engine speed setting for more than 10 seconds, the engine speed will be automatically controlled by ignition interruption and lowered to approximately 3000 RPM.

If the operator decreases the engine speed to less than the maximum engine speed setting within 10 seconds, the over-revolution caution control will be cancelled.

To cancel the over-revolution caution control when it is activated only by excessive engine speed, close the throttle to reduce the engine speed to under 2500 RPM for one second.

Low Oil Pressure Caution System

The low oil pressure caution control is activated when the oil pressure is at or below the preset minimum oil pressure setting of 7 psi (49 kPa) engine operation.

When the oil pressure is higher than the preset minimum oil pressure setting, the oil pressure switch is OFF (no continuity).

When the oil pressure is at or below the preset minimum oil pressure setting, the oil pressure switch is ON (continuity) and the low oil pressure caution control is activated.

If the engine speed is over 3000 RPM, the over-revolution caution control will be activated. The engine speed will be automatically controlled by ignition interruption and lowered to approximately 3000 RPM.

To cancel the low oil pressure caution control, immediately stop the engine and check whether the engine oil is at the correct level. Add oil, if needed.

If the low oil pressure caution control is activated and the engine oil is at the correct level, check for an abnormal condition in the low oil pressure caution circuit, a leakage in the oil passages, and a worn or damaged oil pump.

Overheat Caution System

The overheat caution system is activated when the cylinder temperature sensor detects any of the following conditions:

- The cylinder wall temperature is at 208 to 230°F (98 to 110°C) or higher.
- The rate of the cylinder wall temperature variation within a given time exceeds the preset rate.

If the engine speed is over 3000 RPM, the over-revolution caution control will be activated. The engine speed will be automatically controlled by ignition interruption and lowered to approximately 3000 RPM.

To cancel the overheat caution control, the cylinder wall temperature must be reduced to less than 158°F (70°C) and, at the same time, the engine speed must be decreased to 1500 RPM or lower.

Test Procedures

Checking the Oil Pressure Switch

IMPORTANT: Before checking the low oil pressure caution circuit, make sure the engine oil pressure is over 7 psi (49 kPa).

Remove the blue/yellow lead wire from the oil pressure switch. Check for continuity between the switch terminal and the engine body ground.
If the measurement is out of specification, replace the oil pressure switch.

Low Oil Pressure Caution Circuit Test	
Engine running	Infinity
Engine stopped	Continuity

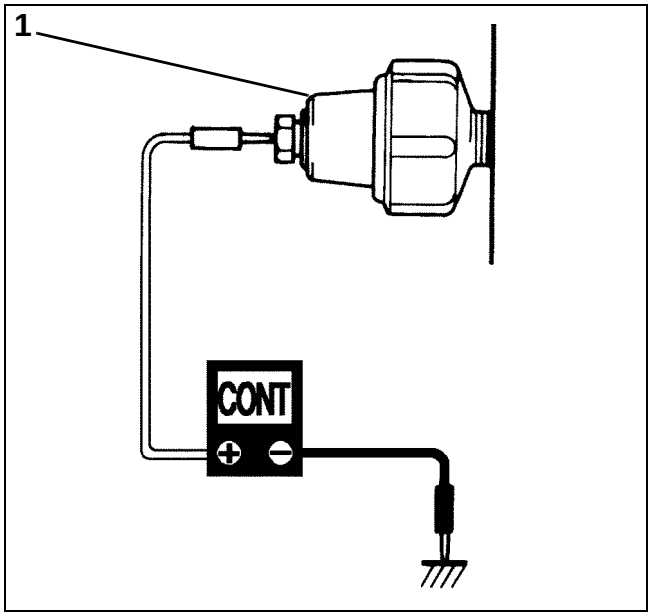

1. Oil pressure switch 001670

Checking the Caution Lamp

Remove the blue/yellow lead wire from the oil pressure switch. Start the engine.

Touch the blue/yellow lead wire to the engine body ground. If the caution lamp comes on, the oil pressure switch circuit and the caution lamp circuit are functioning normally.

If the caution lamp does not come on, disconnect the caution lamp lead wires from the engine harness.

Connect 2 pin test cord, P/N 5034617, then connect the caution lamp lead wires to a 1.5V battery.

If the caution lamp does not come on, replace the lamp.

Caution Lamp Test		
Battery connection		Result
Positive (+)	Negative (–)	
Pink	Black	Lamp ON

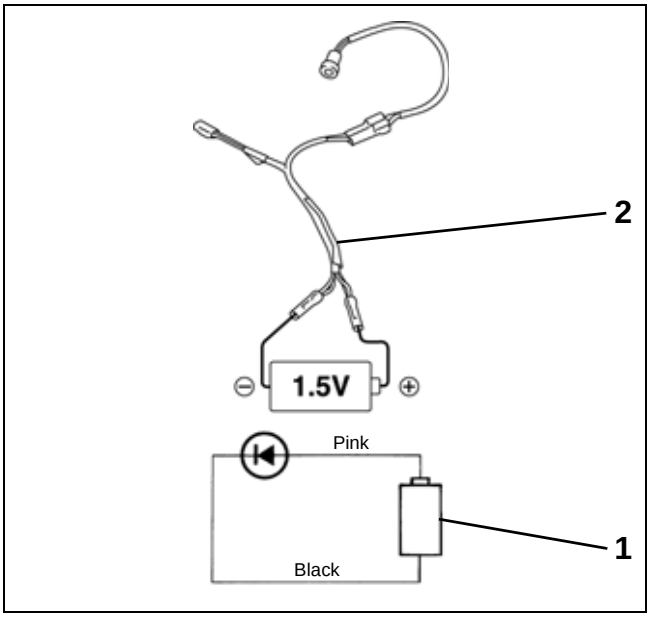

1. 1.5V battery 001671
2. 2 pin test cord

Checking the Cylinder Temperature Sensor Resistance

Remove the cylinder temperature sensor.

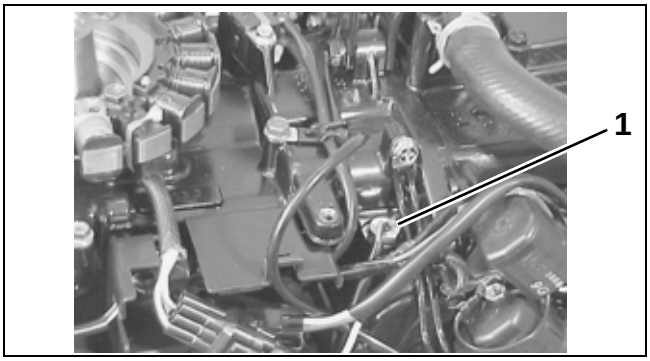

1. Cylinder temperature sensor 001672

Connect an ohmmeter between the sensor lead wires.

Immerse the sensor's tip in a container of water and gradually heat the water while monitoring the changes in sensor resistance.

If the measurements are out of specification, replace the cylinder temperature sensor.

Test probe connection	
Red (+)	**Black (–)**
Violet	Black

Cylinder Temperature Sensor Resistance	
Water temperature	**Resistance**
32°F (0°C)	5.30 - 6.60 ohms
77°F (25°C)	1.80 - 2.30 ohms
122°F (50°C)	0.73 - 0.96 ohms
135° (75°C)	0.33 - 0.45 ohms

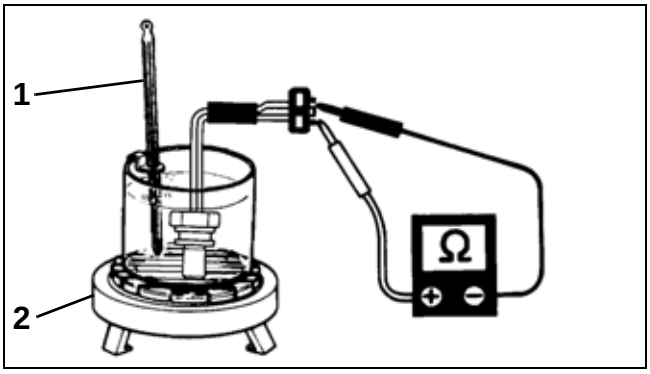

1. Thermometer 001673
2. Heater

REMOVAL AND INSTALLATION

Flywheel

Removal

Disconnect the battery cables at the battery.

Remove three (3) bolts and the flywheel cover.

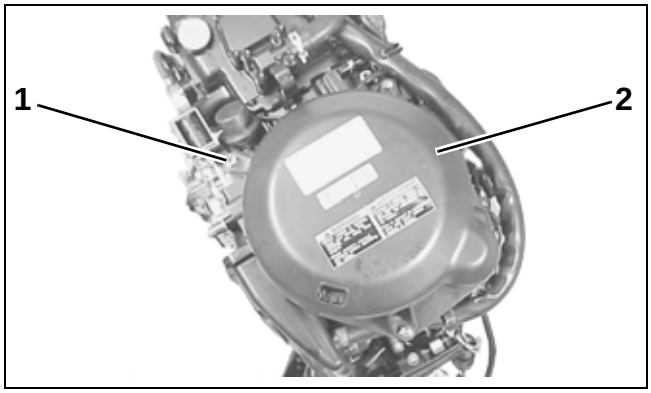

1. Bolts (3) 001394
2. Flywheel cover

Install Flywheel Holder, P/N 5034227, and loosen the flywheel bolt three (3) turns.

IMPORTANT: Do not remove the flywheel bolt at this time. This bolt prevents damage to the crankshaft when using the flywheel removal tools.

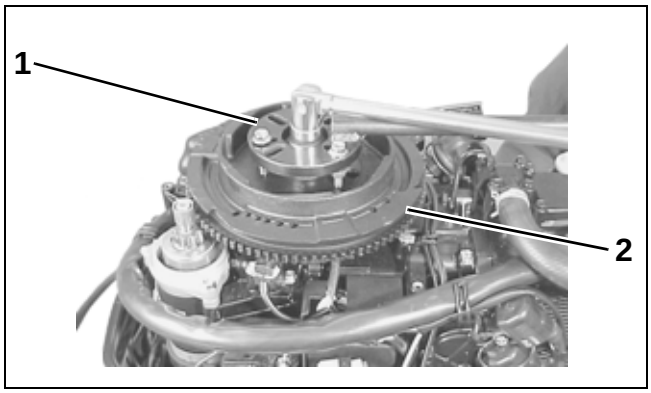

1. Flywheel holder 001677
2. Flywheel

Use Universal Puller Set, P/N 378103, to loosen the flywheel from the crankshaft.

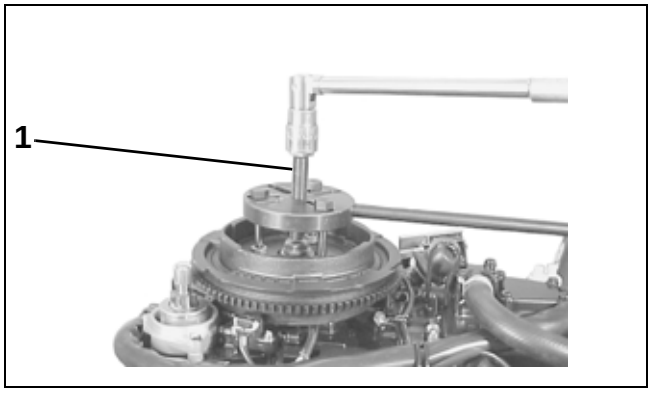

1. Flywheel remover 001678

Remove the flywheel bolt, the washer, and the key from the crankshaft. Remove the flywheel.

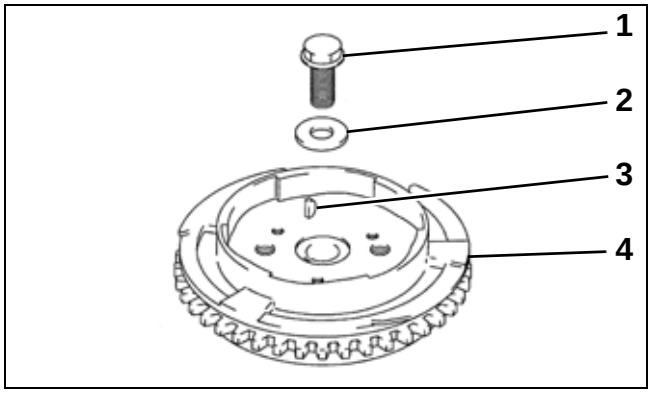

1. Bolt 001679
2. Washer
3. Key
4. Flywheel

Installation

Clean the mating surfaces of the flywheel and the crankshaft with cleaning solvent.

Install the flywheel on the crankshaft. Install the key in the notch on the crankshaft.

Install Flywheel Holder, P/N 5034227, on the flywheel.

Apply engine oil to the threads of the flywheel bolt. Install the washer and the bolt. Tighten the bolt to a torque of 140 ft. lbs. (190 N·m).

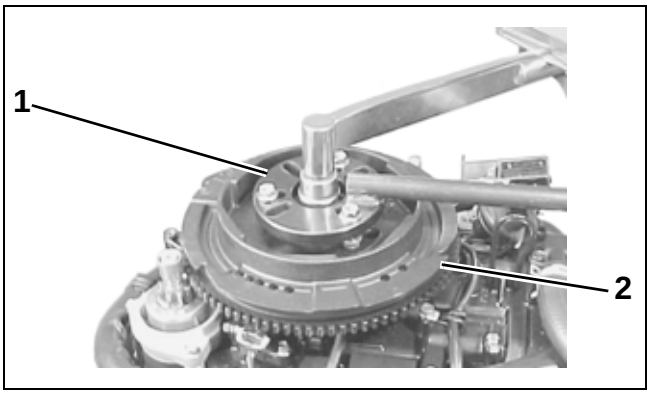

1. Flywheel holder 001681
2. Flywheel

Charge Coil and Crankshaft Position Sensors

Removal

Remove the flywheel.

Remove the screws and both sensors. Then disconnect the sensor connectors.

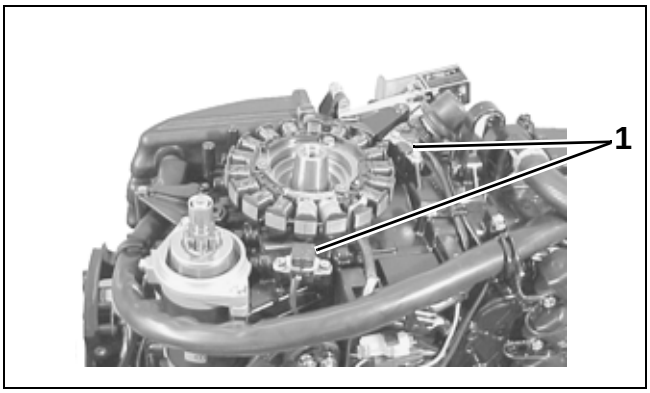

1. Crankshaft position sensors (2) 001654

Remove three (3) bolts and the charge coil, then disconnect the charge coil lead wires.

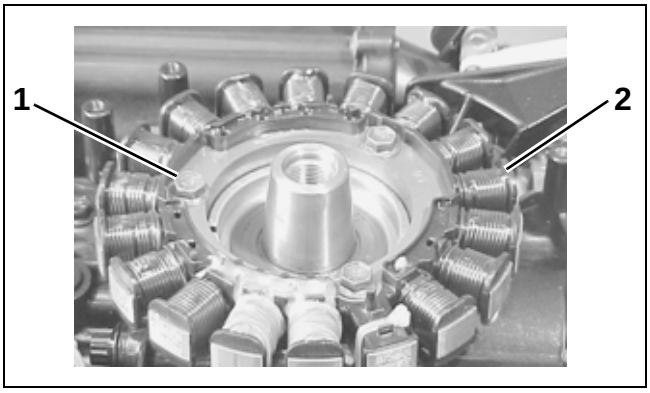

1. Bolts (3)
2. Charge coil
001680

Installation

Install the charge coil. Apply *Nut Lock* to the charge coil bolts. Install and tighten the bolts securely.

Install the sensors. Apply *Nut Lock* to the sensor screws. Install and tighten the screws securely.

Oil Pressure Switch

Removal

Loosen the screw and disconnect the blue/yellow lead wire from the oil pressure switch.

Remove the switch from the crankcase.

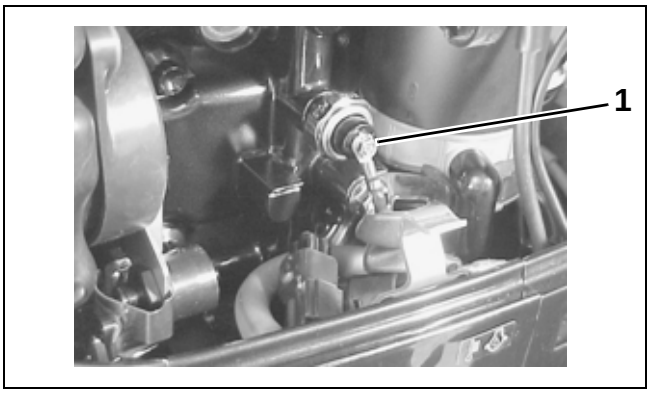

1. Oil pressure switch
001669

Installation

Wrap sealing tape around the threads of the oil pressure switch. Cut off any excess sealing tape from the threads before installing.

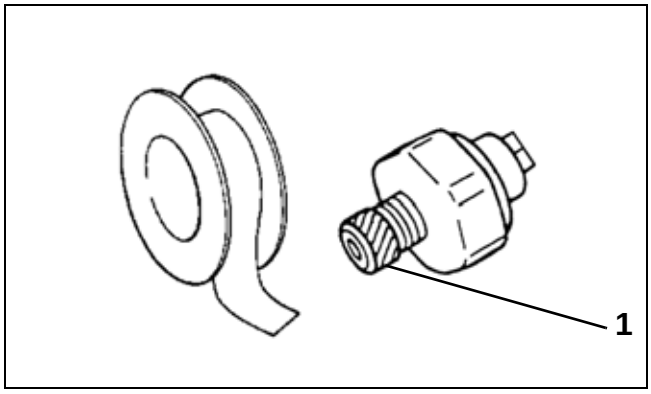

1. Sealing tape
001682

Install and tighten the oil pressure switch to a torque of 115 in. lbs. (13 N·m).

Connect the blue/yellow lead wire to the oil pressure switch and tighten the screw securely.

Start the engine and check the oil pressure switch for oil leakage. Reseal the switch if any leakage is found.

ELECTRICAL

TABLE OF CONTENTS

BATTERY CHARGING SYSTEM 84
OPERATION 84
TEST PROCEDURES 85
REMOVAL AND INSTALLATION 87
ELECTRIC STARTER SYSTEM 87
SCHEMATICS 87
TROUBLESHOOTING 88
TEST PROCEDURES 90
STARTER MOTOR 91
REMOVAL 91
DISASSEMBLY 92
INSPECTION AND TESTING 93
ASSEMBLY 95
INSTALLATION 97
NOTES 98

BATTERY CHARGING SYSTEM

Operation

The battery charging system is composed of the battery charge coil, rectifier and regulator, and battery.

The AC current generated by the battery charge coil is converted by the rectifier and regulator into regulated DC current, which is used to charge the battery.

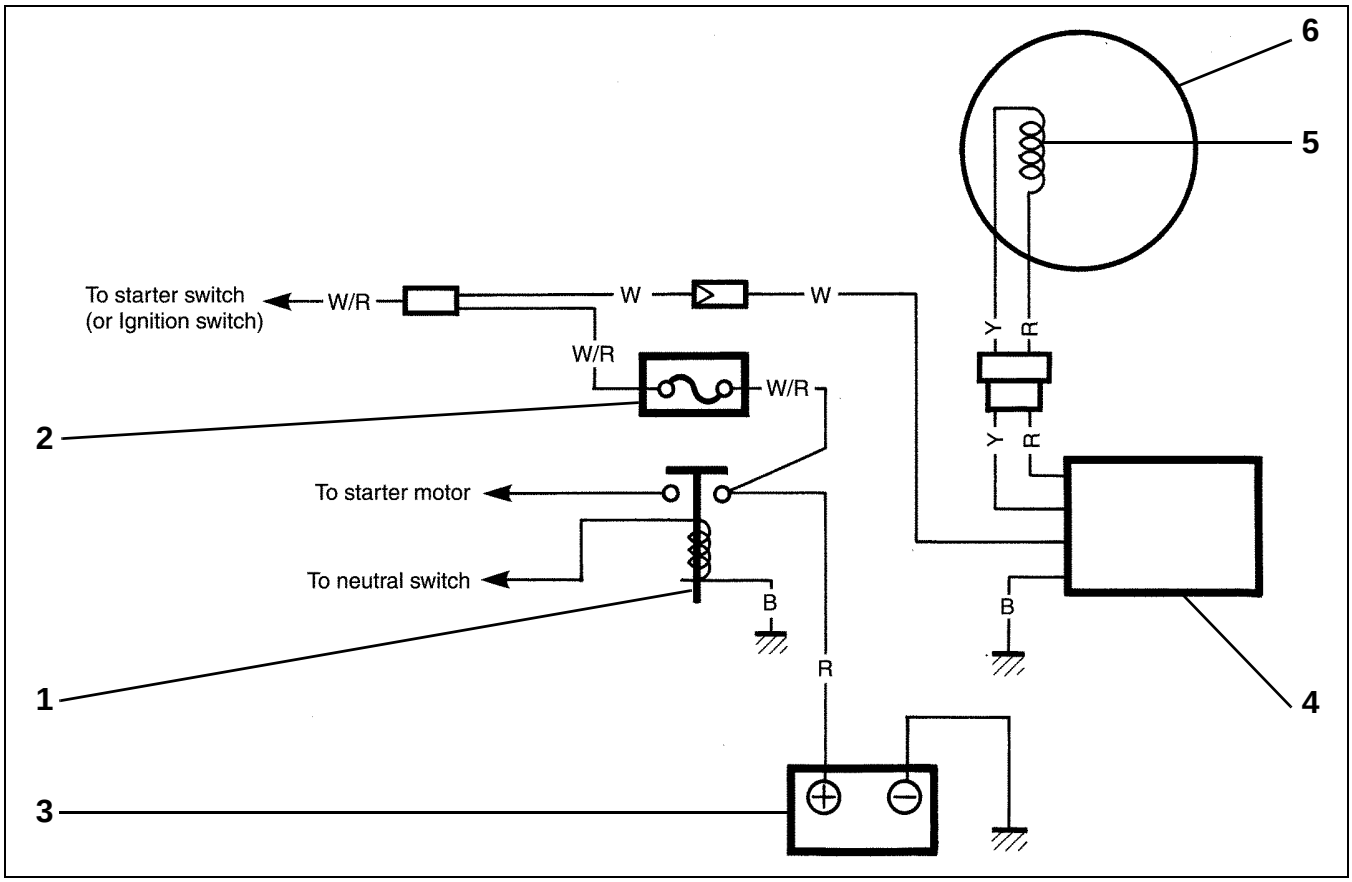

001685

1. *Starter motor relay*
2. *Fuse (25A)*
3. *Battery (12V)*
4. *Rectifier and regulator*
5. *Battery charge coil*
6. *Alternator (magneto)*

Test Procedures

Checking the Charge Coil Cranking Output

Disconnect the charge coil leads from the rectifier and regulator. Connect a peak voltage tester between the charge coil leads.

Remove all spark plugs.

Measure the charge coil output at cranking. If the measurement is out of specification, replace the charge coil.

Charge Coil Cranking Output		
Tester probe connection		Output
Red (+)	Black (–)	
Yellow	Red	8V or more

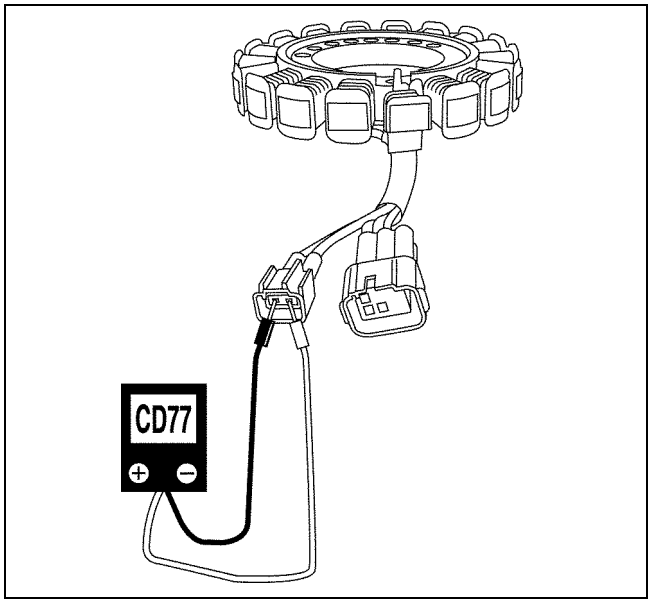

001686

Checking the Charge Coil Resistance

Disconnect the charge coil leads from the rectifier and regulator.

Measure the resistance between the coil leads. If the measurement is out of specification, replace the charge coil.

Charge Coil Resistance		
Tester probe connection		Resistance
Red (+)	Black (–)	
Yellow	Red	0.27 to 0.40 ohms

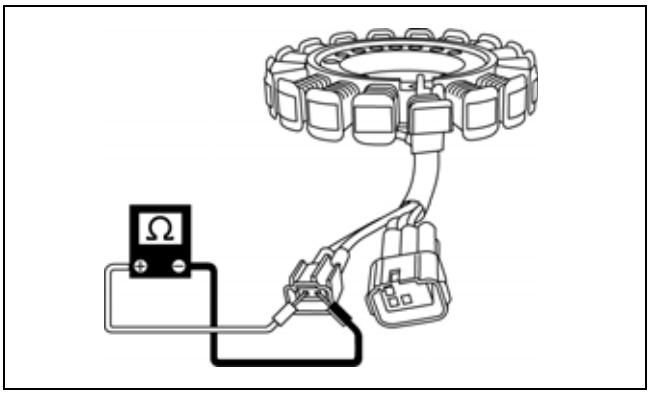

001687

Checking for Fuse/Fuse Case Continuity

Remove the fuse from the fuse case. Check the fuse for continuity. Replace the fuse if there is no continuity.

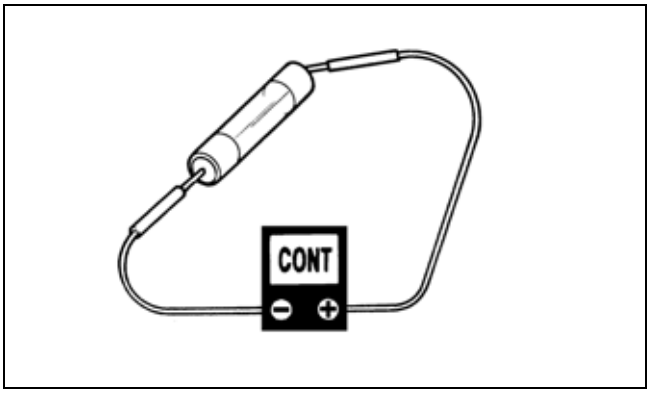

001688

Disconnect all wires from the fuse case. Check for continuity between the white/red lead wire with the plate terminal and the other two lead wires. If there is no continuity, replace the fuse case.

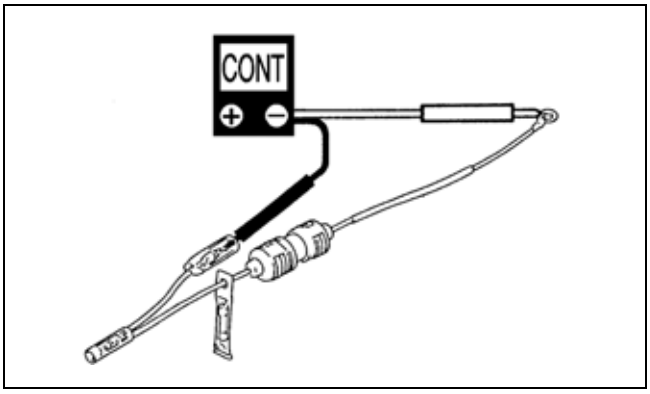

001689

Checking the Rectifier and Regulator Resistance

The rectifier and regulator is a solid-state device that cannot be reliably checked with resistance tests. Instead, the engine must be run continuously at approximately 3000 RPM in a test tank or on a marine dynamometer while the system's response to a partially discharged battery is monitored.

IMPORTANT: Before proceeding, check the battery voltage at the rectifier and regulator's white lead wire. This will test the condition of the 25 amp fuse and the wiring to the battery.

Disconnect the battery cables at the battery.

Connect a 0-40 amp ammeter in series between the rectifier and regulator's white wire connector (female) and the 25 amp fuse's white wire connector (male), or use an inductive pickup on the white wire.

Connect the battery cables at the battery.

Connect a variable load tester (carbon pile) across the battery terminals.

⚠ WARNING ⚠

Excessive battery discharge rates might overheat the battery, causing electrolyte gassing and creating an explosive atmosphere.

Start and run the engine at various speeds. Use the variable load tester to draw the battery down at a rate that is equivalent to the stator's full output.

The ammeter should indicate the following outputs:

- 10 amps at 700 RPM
- 15 amps at 1200 RPM
- 13 amps at 5000 RPM

Reduce the battery load toward zero amps. The ammeter should indicate a reduced output. As the current draw decreases, the battery voltage should stabilize at approximately 14.5 volts.

If the results vary, check the condition of the stator with a resistance test before replacing the rectifier and regulator.

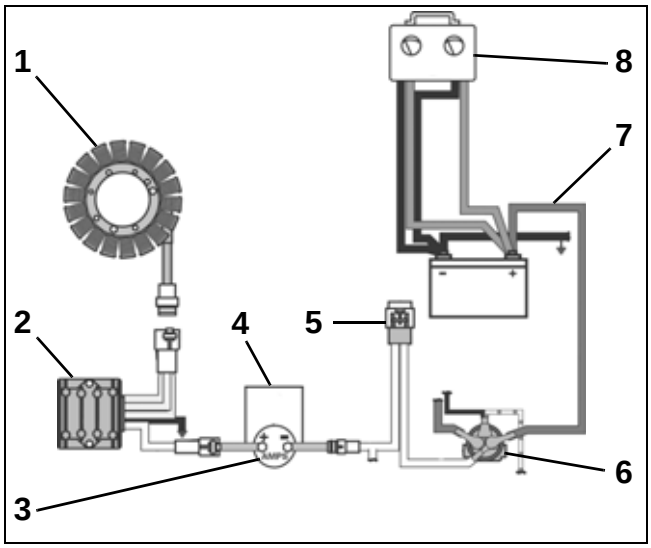

001690

1. *Stator*
2. *Rectifier and regulator*
3. *Ammeter*
4. *Jumper wire*
5. *25 amp fuse*
6. *Starter relay*
7. *Red (+) battery cable*
8. *Carbon pile*

Removal and Installation

Battery Charge Coil

Refer to the **ENGINE CONTROL** section for these procedures.

Rectifier and Regulator

Remove two (2) bolts and the rectifier and regulator. Disconnect the lead wire connectors.

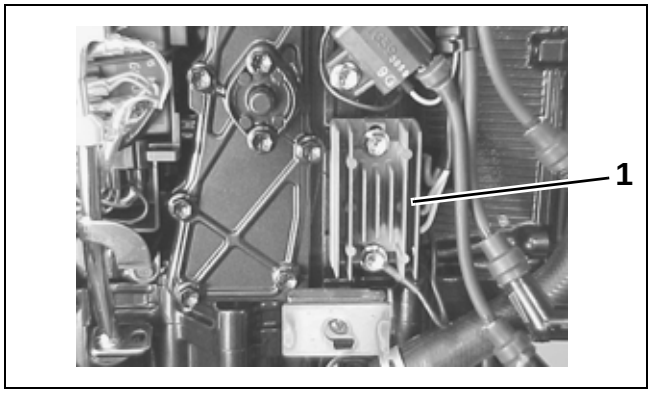

1. Rectifier and regulator 001694

Fuse Case

Disconnect the fuse case lead wires from the engine wiring harness and the starter motor relay terminal, then remove the fuse case.

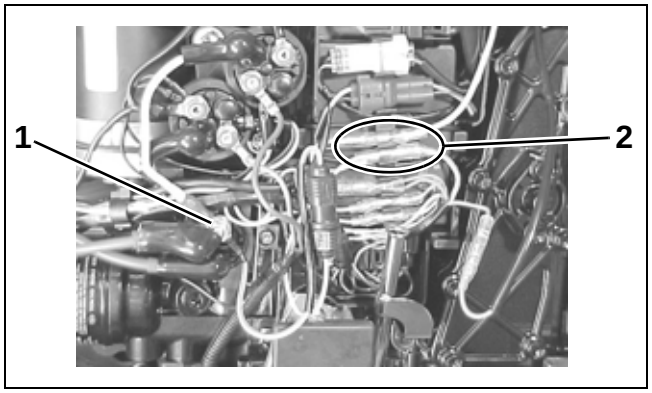

1. Starter motor relay terminal 001695
2. Fuse case lead wires

ELECTRIC STARTER SYSTEM

Schematics

Tiller Handle Models

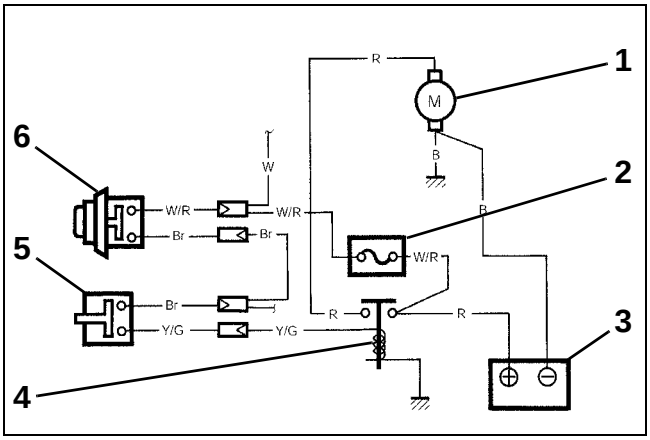

1. Starter motor 001696
2. Fuse (25V)
3. Battery (12V)
4. Starter motor relay
5. Neutral switch
6. Starter switch

Remote Control Models

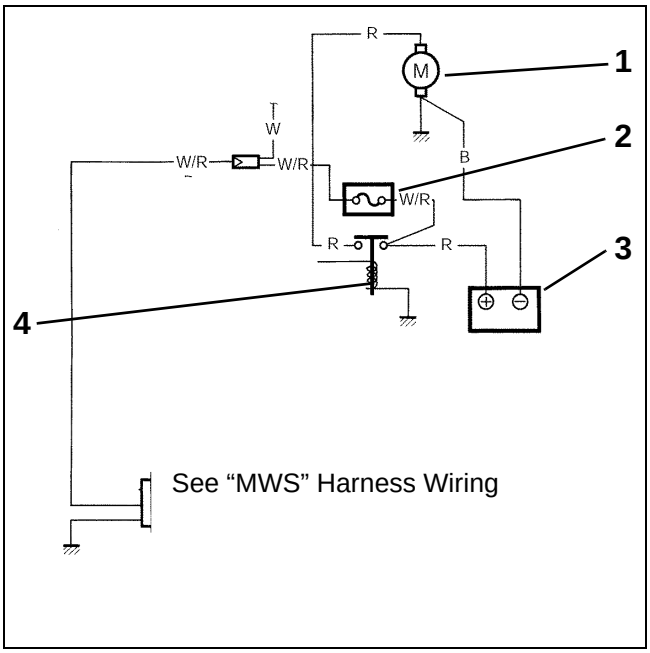

1. Starter motor 001697
2. Fuse (25V)
3. Battery (12V)
4. Starter motor relay

Troubleshooting

IMPORTANT: Before testing the electric starter system, make sure that the battery is fully charged, all cables and wires are securely connected, and the shift lever is in Neutral.

Tiller Handle Models

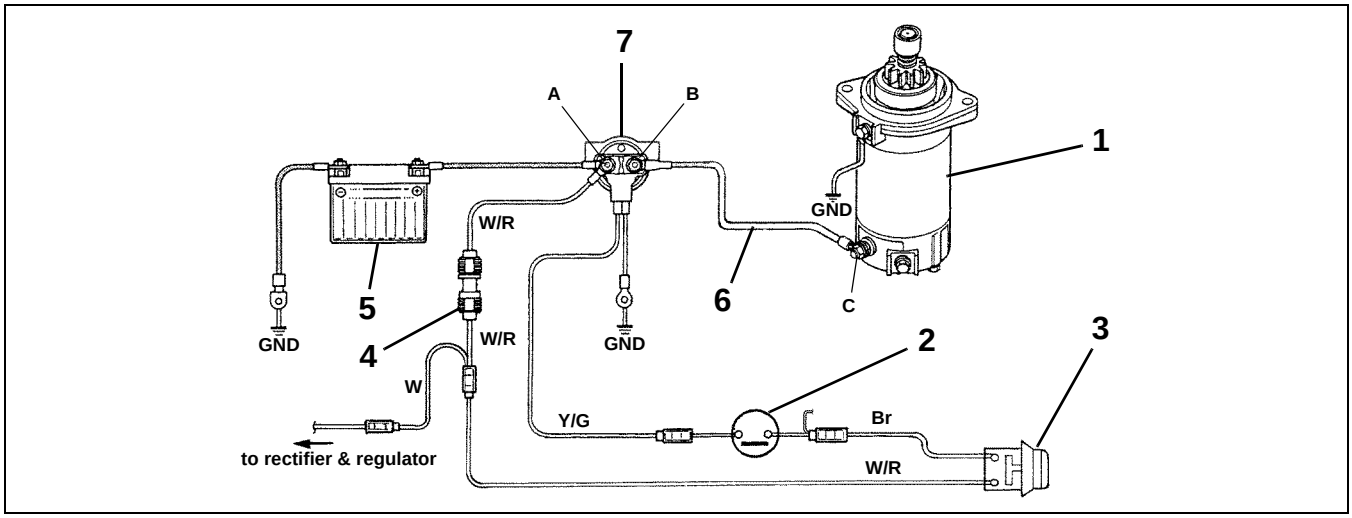

1. *Starter motor*
2. *Neutral switch*
3. *Starter switch*
4. *Fuse (25A)*
5. *Battery (12V)*
6. *Starter motor sub cable*
7. *Starter motor relay*

001698

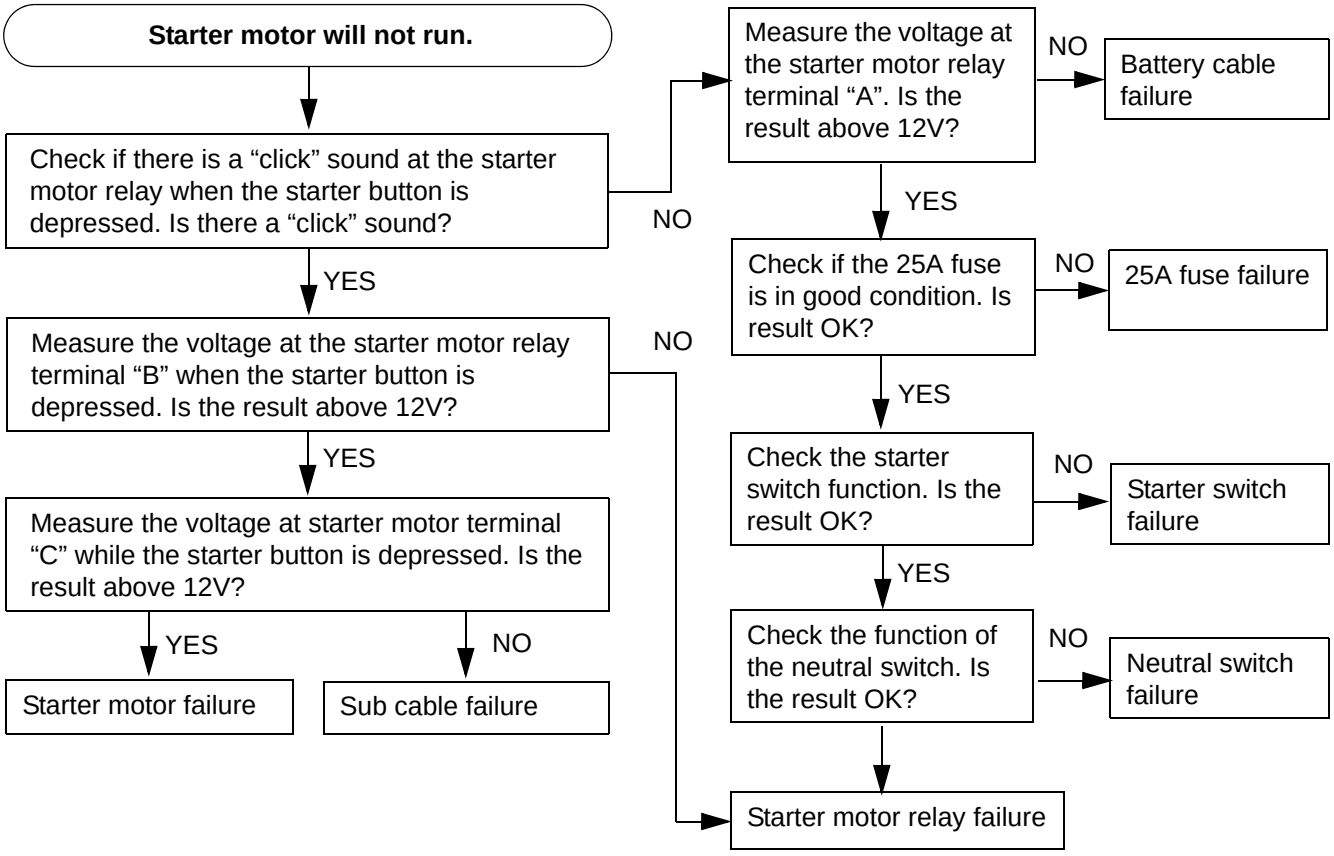

Remote Control Models

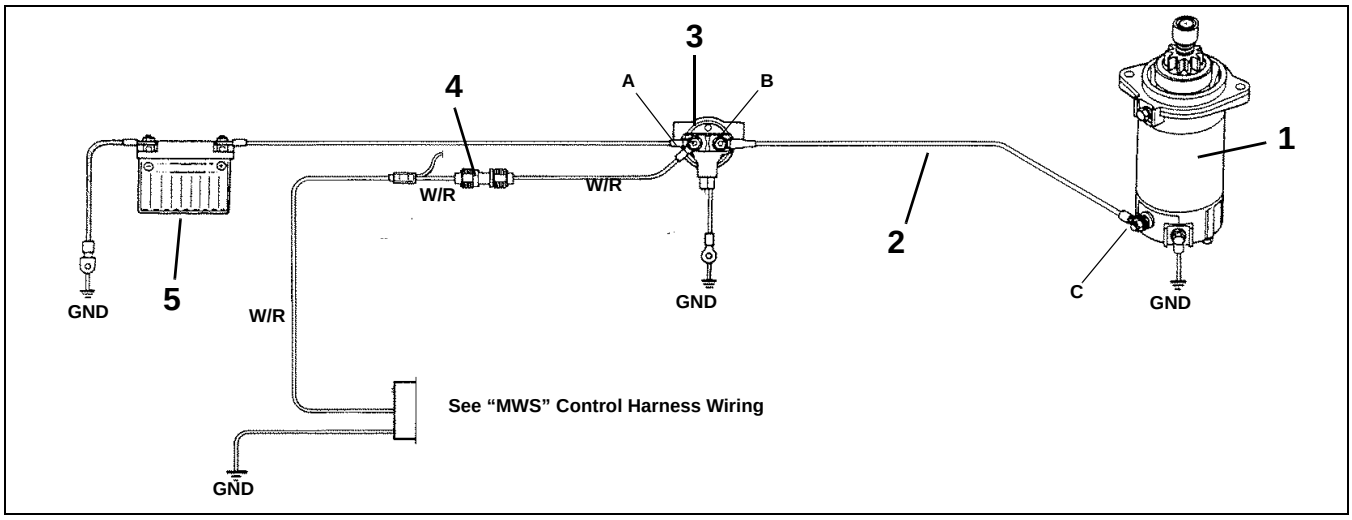

001699

1. *Starter motor*
2. *Starter motor sub cable*
3. *Starter motor relay*
4. *Fuse (25 A)*
5. *Battery (12 V)*

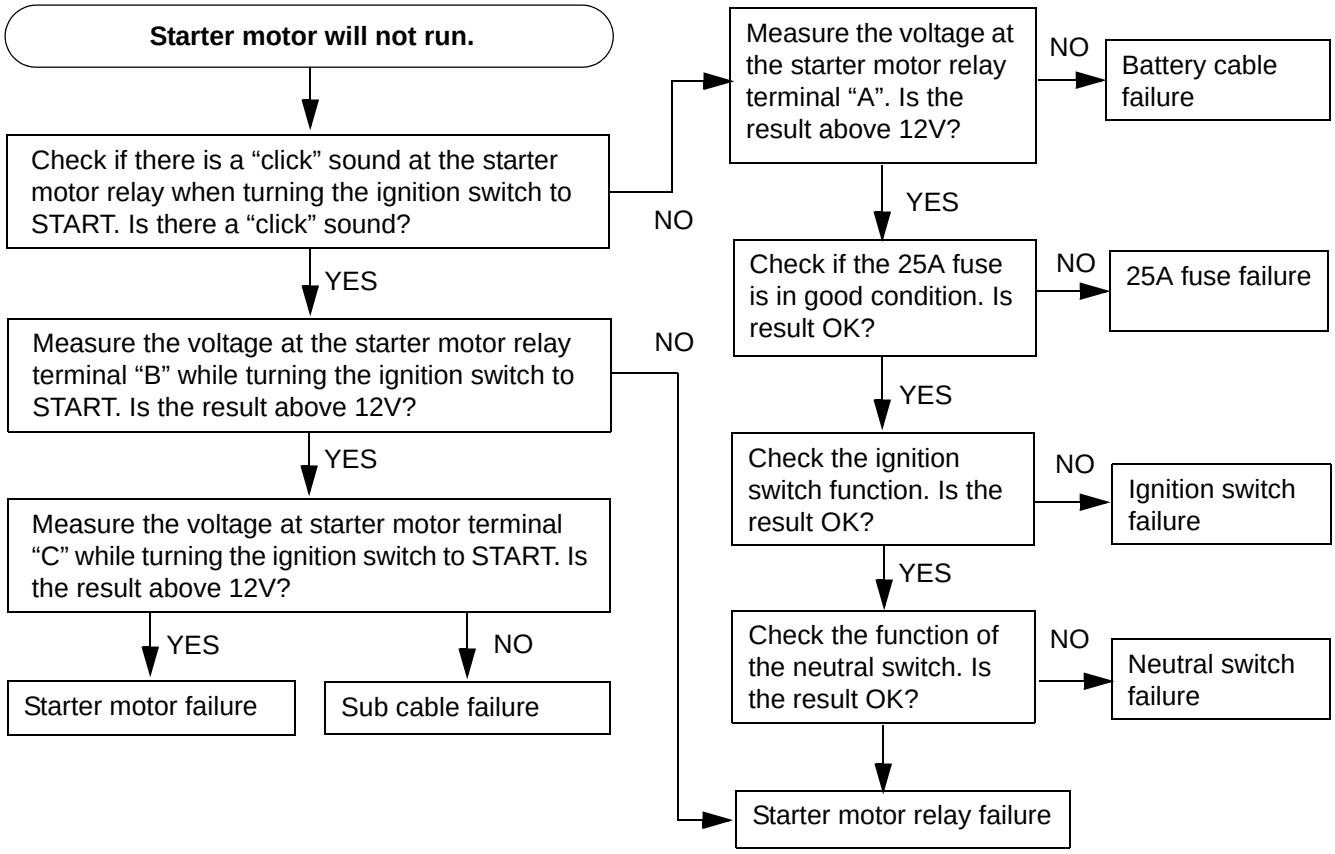

Test Procedures

Checking the Starter Switch for Continuity (TEL Models only)

Disconnect the starter switch lead wire. Check for continuity between the wiring leads under the following conditions.

Starter Switch Continuity Test		
Tester probe connection		Result
Red (+)	Black (–)	
White/Red	Brown	Not depressed: Infinity Depressed: Continuity

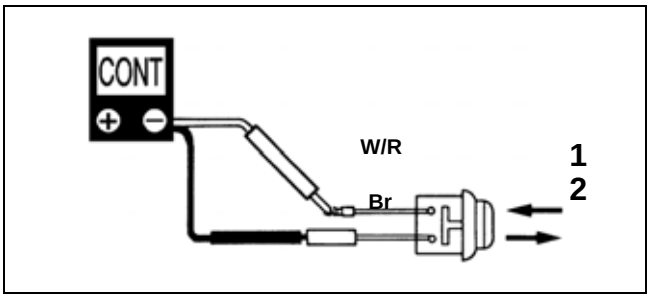

1. *Depressed*
2. *Not depressed*

001701

Checking the Neutral Switch for Continuity (TEL Models only)

Disconnect the neutral switch lead wires. Check for continuity between the yellow/green and brown lead wires while operating the shift lever or remote control handle.

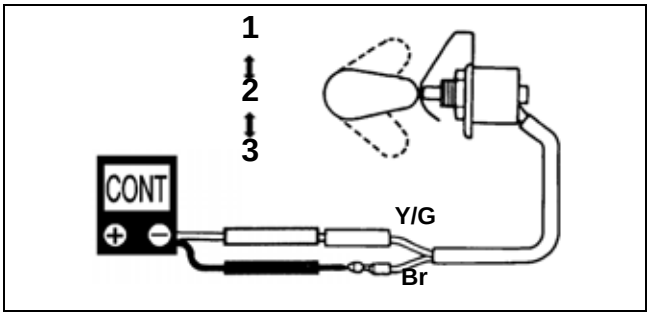

1. *FORWARD position*
2. *NEUTRAL position*
3. *REVERSE position*

001702

Neutral Switch Continuity Test	
Shift Position	Result
Neutral	Continuity
Forward	Infinity
Reverse	Infinity

If the results are out of specification, first check the switch position. Adjust if necessary.

If the results are still out of specification, replace the neutral switch. After installing a new neutral switch, check for correct function by operating the remote control handle or the shift lever.

Checking the Starter Motor Relay

Two methods can be used to test the starter motor relay.

Method 1

Disconnect all cables and lead wires from the starter motor relay. Measure the resistance between the relay wiring leads.

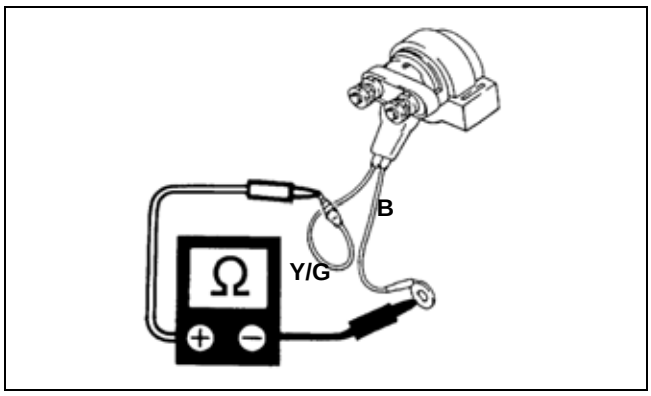

001703

Starter Motor Relay Resistance Test		
Tester probe connection		Resistance
Red (+)	Black (–)	
Yel-low/Green	Black	3.5 - 5.1 ohms

If the measurement is out of specification, replace the starter motor relay.

Method 2

Disconnect all cables and lead wires from the starter motor relay. Measure the continuity between the relay terminals.

Connect the yellow/green wire to the positive (+) battery terminal and the black wire to the negative (–) battery terminal. Connect the test probe between the relay terminals. Then disconnect the wiring leads from the battery.

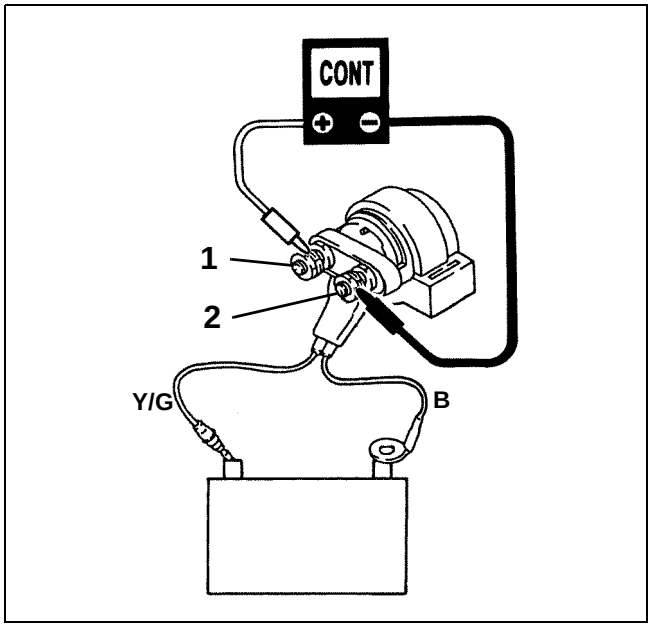

001704

Starter Motor Relay Terminal Continuity Test		
Test probe connection		Result
Red (+)	Black (–)	
Terminal 1	Terminal 2	12V applied: Continuity No voltage: No continuity

If the measurements are out of specification, replace the starter motor relay.

STARTER MOTOR

Removal

Disconnect the battery cables at the battery.

Remove three (3) bolts and the flywheel cover.

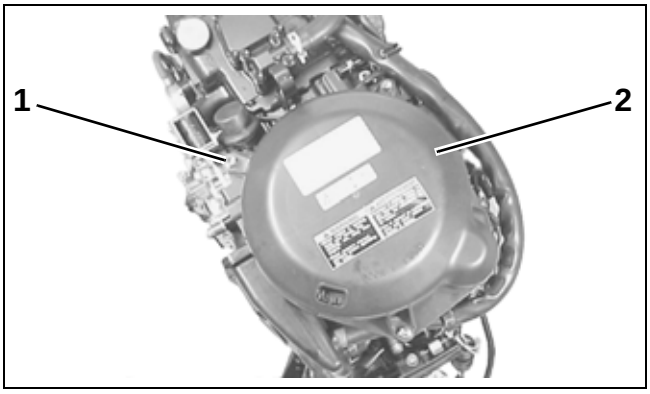

1. *Bolts (3)*
2. *Flywheel cover*

001394

Remove the bolt and the negative battery cable.

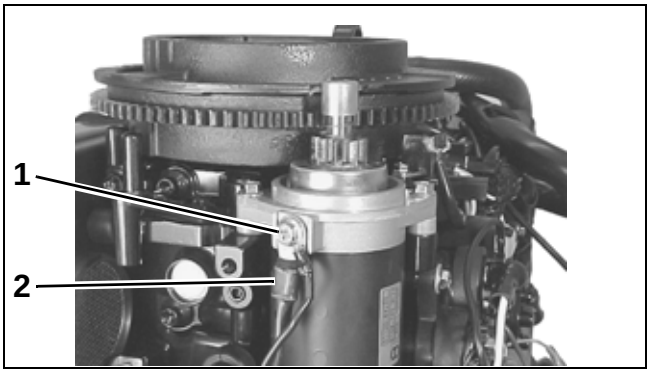

1. *Bolt*
2. *Negative battery cable*

001705

Remove the starter motor sub cable. Remove two (2) bolts and the starter motor band.

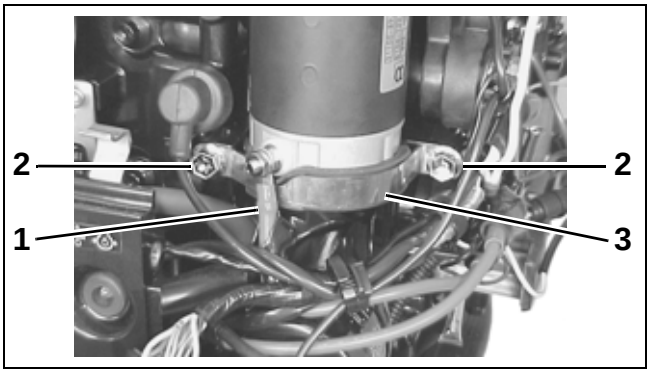

1. Starter motor sub cable 001706
2. Bolts (2)
3. Starter motor band

Remove two (2) bolts.

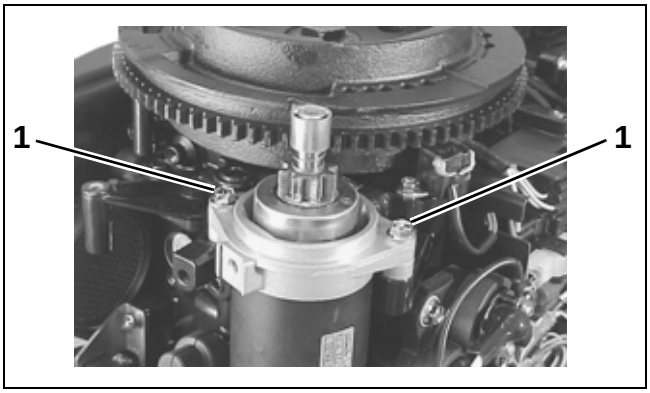

1. Bolts (2) 001707

Remove the starter motor, the spacers, and the dowel pins.

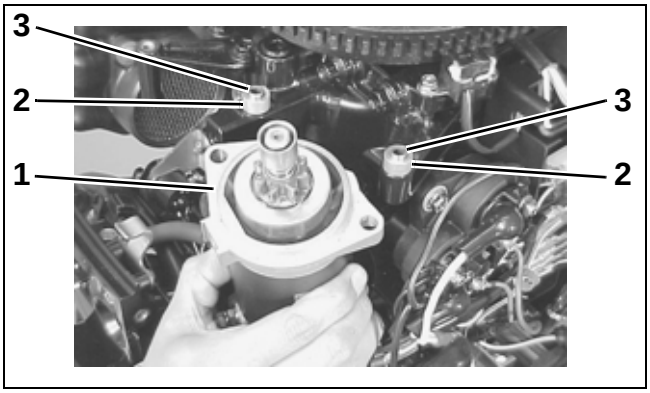

1. Starter motor 001708
2. Spacers (2)
3. Dowel pins (2)

Disassembly

WARNING

When removing or installing any type of retaining rings, wear eye protection to avoid personal injury.

Push down on the pinion stop. Use a screwdriver to pry off the stop ring. Remove the pinion stop, the spring, and the pinion from the armature shaft.

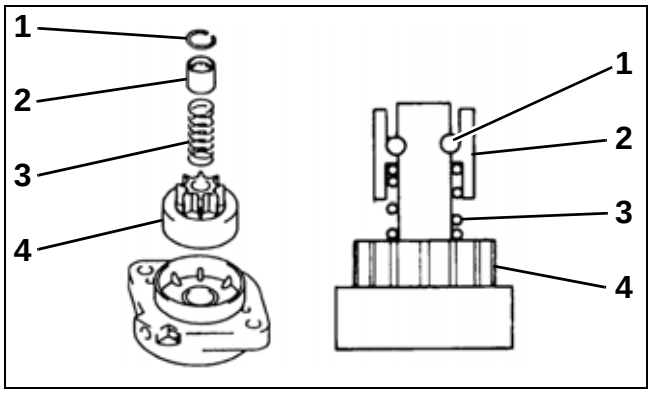

1. Stop ring 001721
2. Pinion stop
3. Spring
4. Pinion

Remove two (2) through bolts and the front cover.

Remove two (2) washers, the shim, the armature, the bottom washer, and the stator from the rear cover.

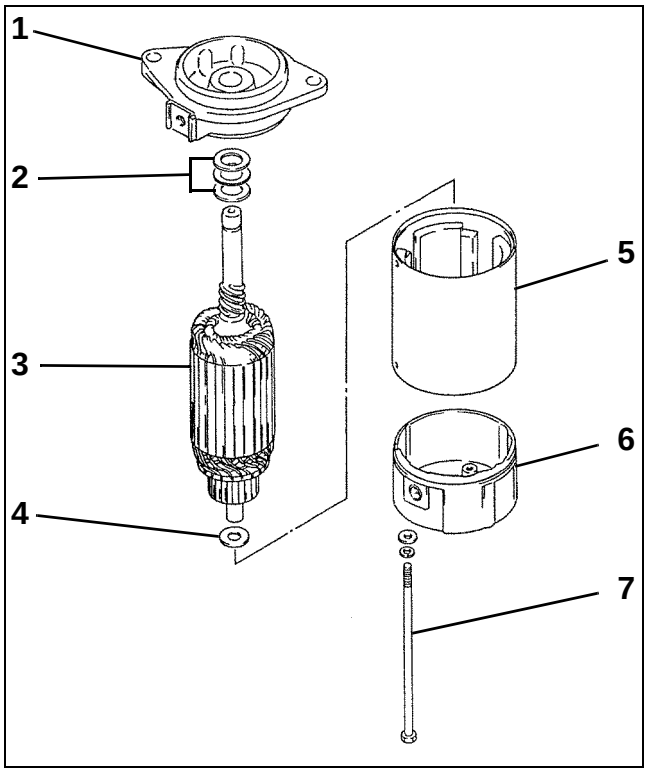

1. *Front cover* 001719
2. *Washers and shim*
3. *Armature*
4. *Bottom washer*
5. *Stator*
6. *Rear cover*
7. *Through bolt (2)*

Remove the nut, the washers, the plastic washer and the O-ring from the rear cover. Remove two (2) screws and the brush holder assembly.

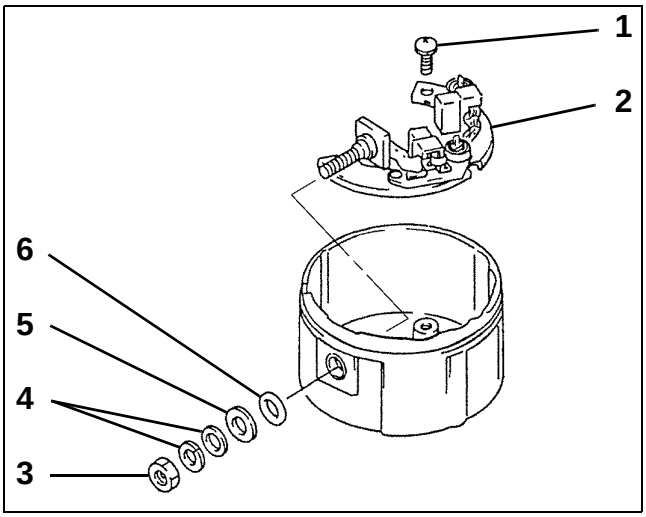

1. *Screws (2)* 001710
2. *Brush holder*
3. *Nut*
4. *Washers (2)*
5. *Plastic washer*
6. *O-ring*

Inspection and Testing

Inspect the pinion for wear and damage.

Inspect the commutator. If the surface is gummy or dirty, use 400 grade emery paper to clean it.

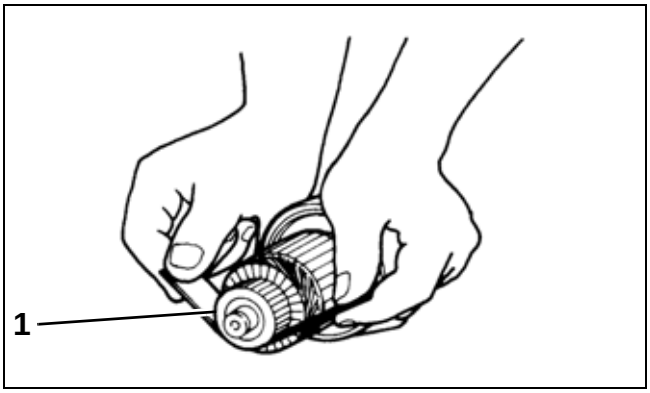

1. *Commutator* 001712

Use vernier calipers to measure the commutator outside diameter.

If the measurement is less than the service limit, replace the armature.

Commutator Outside Diameter	
Standard	1.18 in. (30 mm)
Service Limit	1.14 in. (29 mm)

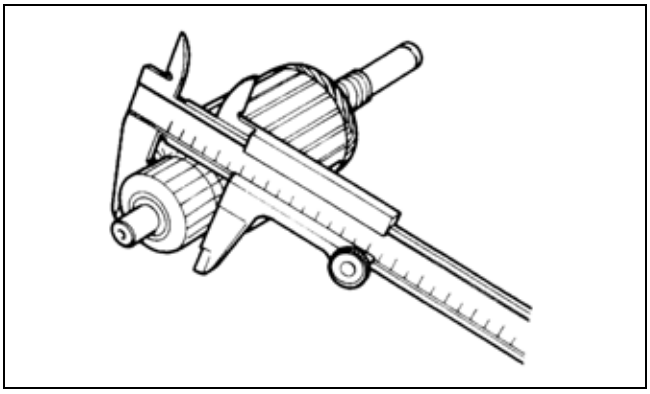

001713

Check that the mica (insulator) between the segments is undercut to the correct depth.

If the measurement exceeds the service limit, cut the mica to the specified depth.

Mica Undercut Depth	
Standard	0.02 - 0.03 in. (0.5 - 0.8 mm)
Service Limit	0.01 in. (0.2 mm)

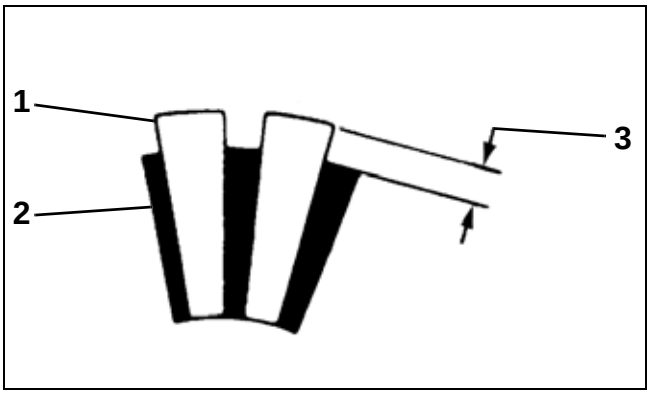

1. Segment
2. Mica
3. Undercut

001714

WARNING

To avoid personal injury, wear eye protection and set compressed air pressure to less than 25 psi (172 kPa).

Use compressed air to remove all particles of mica and metal from the armature.

Check for continuity between the commutator and the armature core and shaft. Replace the armature if continuity is indicated.

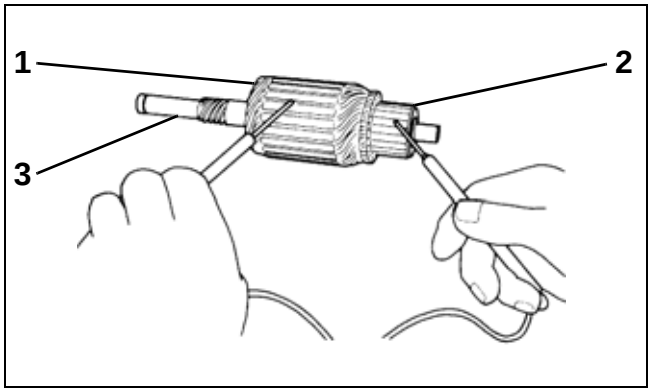

1. Armature core
2. Commutator
3. Shaft

001715

Check for continuity between the adjacent commutator segments. Replace the armature if no continuity is indicated.

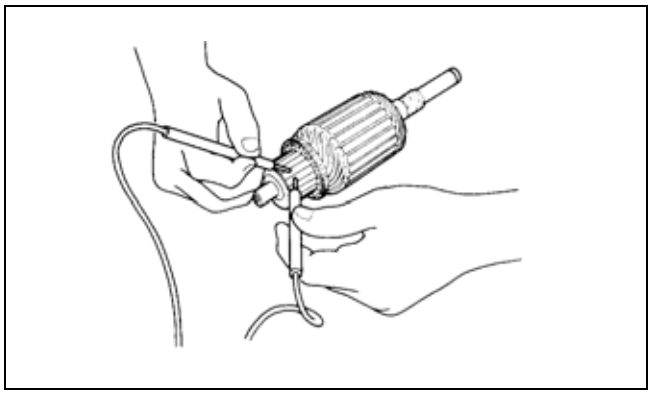

001716

Use vernier calipers to check the length of each brush.

If any brushes are worn below the service limit, they must be replaced.

Brush Length	
Standard	0.49 in. (12.5 mm)
Service Limit	0.35 in. (9.0 mm)

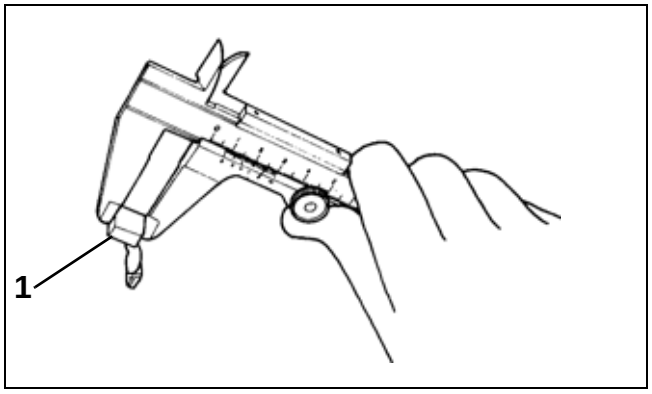

1. Brush 001717

Check the brush holder for continuity. There should be no continuity between the two brush holder terminals or between the positive (+) terminal and the base plate.

If any continuity is indicated, replace the brush holder.

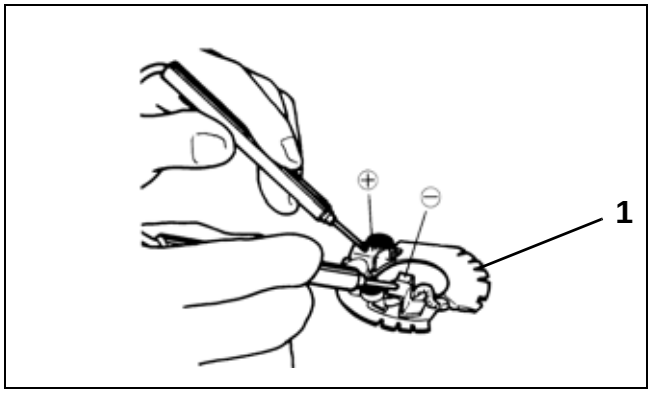

1. Brush holder 001718

Assembly

Install the brush holder assembly in the rear cover. Install and tighten the screws securely.

Install a **new** O-ring, the plastic washer, two (2) washers, and the nut that secures the brush holder to the rear cover.

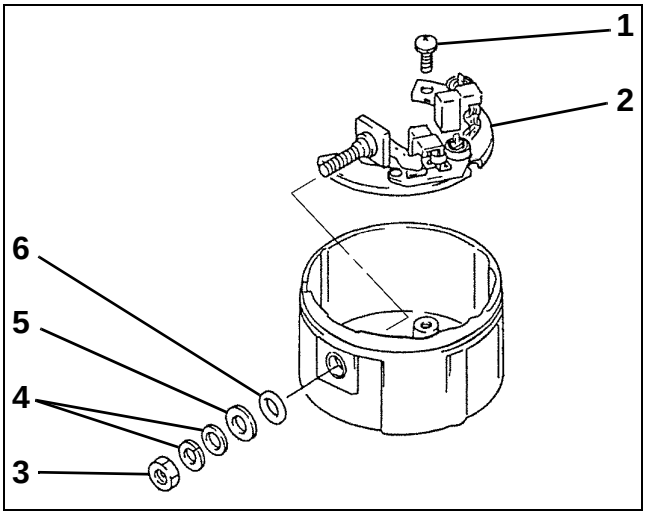

1. Screws (2) 001710
2. Brush holder
3. Nut
4. Washers (2)
5. Plastic washer
6. O-ring

Apply *Moly Lube* to the armature shaft and the shaft bore in the front cover.

IMPORTANT: When installing the armature, be careful not to break any brushes in the brush holder.

Install the stator, the bottom washer, the armature, two (2) washers, and the shim on the rear cover.

Install the front cover and two (2) through bolts. Tighten the bolts securely.

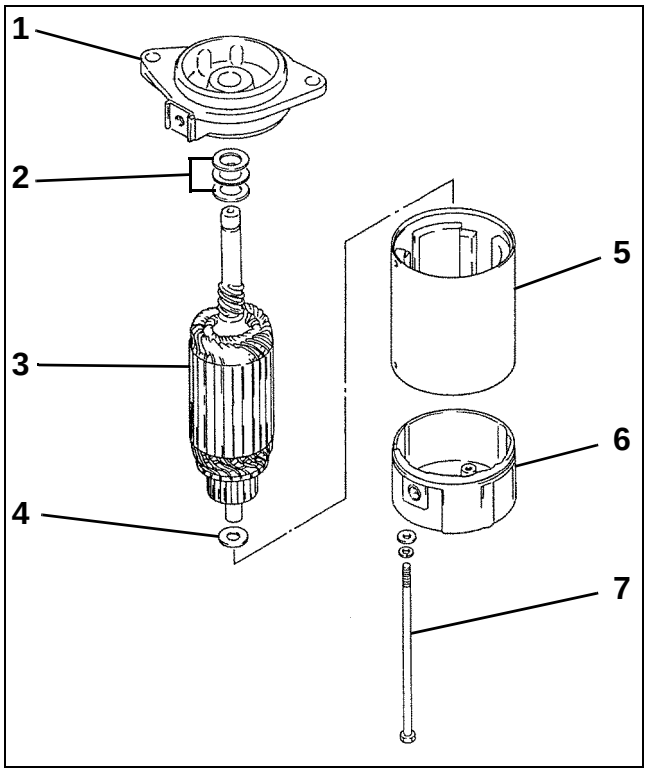

1. *Front cover* 001719
2. *Washers and shim*
3. *Armature*
4. *Bottom washer*
5. *Stator*
6. *Rear cover*
7. *Through bolt (2)*

IMPORTANT: Align the notches in the covers with the tab on the stator when assembling the starter motor.

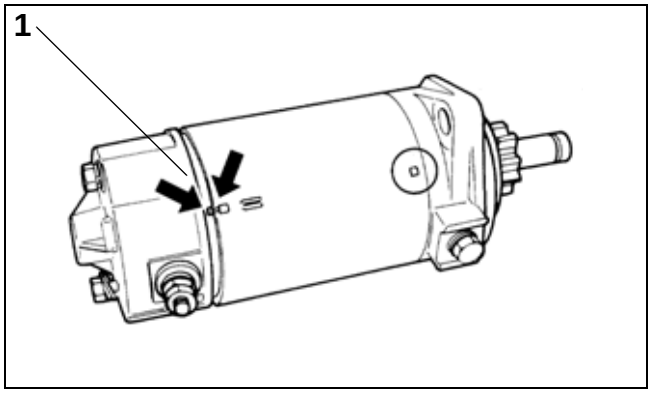

1. *Notches* 001720

WARNING

When removing or installing any type of retaining rings, wear eye protection to avoid personal injury.

Install the pinion, the spring, the pinion stop, and the stop ring. Make sure that the stop ring fits tightly in the pinion stop and around the armature shaft.

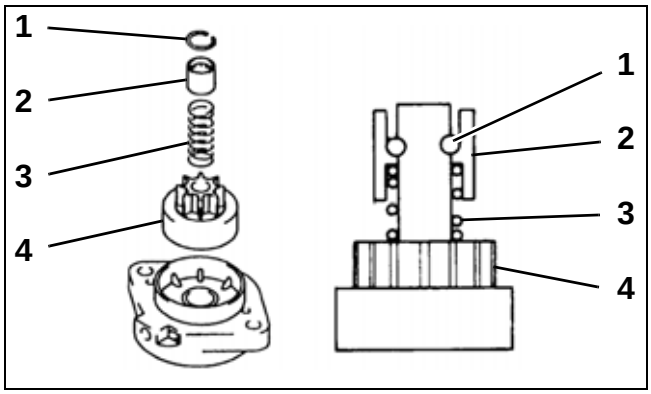

1. *Stop ring* 001721
2. *Pinion stop*
3. *Spring*
4. *Pinion*

Installation

Install the dowel pins, the spacers, and the starter motor.

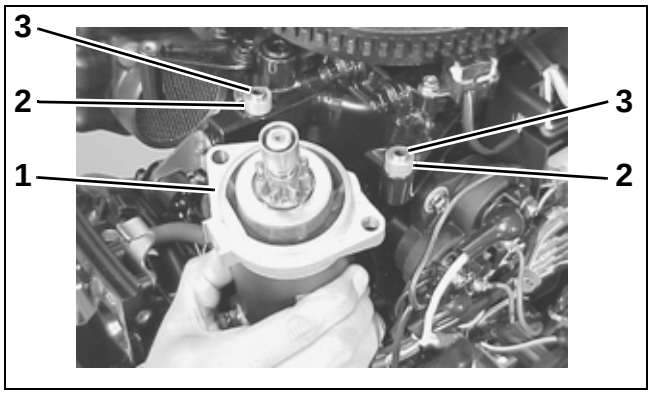

1. *Starter motor* 001708
2. *Spacers (2)*
3. *Dowel pins (2)*

Install and tighten two (2) bolts to a torque of 97 in. lbs. (11 N·m).

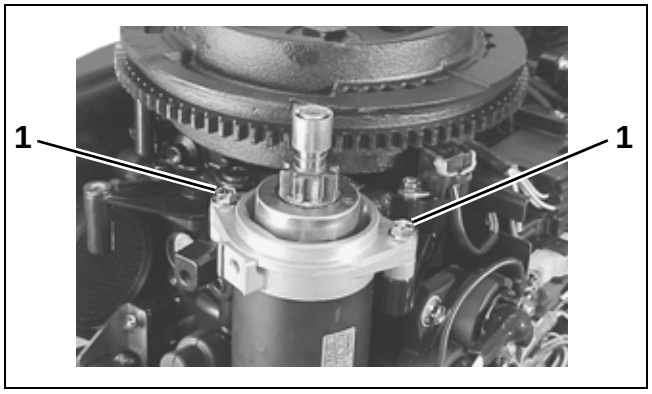

1. *Bolts (2)* 001707

Install the starter motor band and two (2) bolts. Tighten the bolts to a torque of 17 ft. lbs. (23 N·m).

Install the starter motor sub cable.

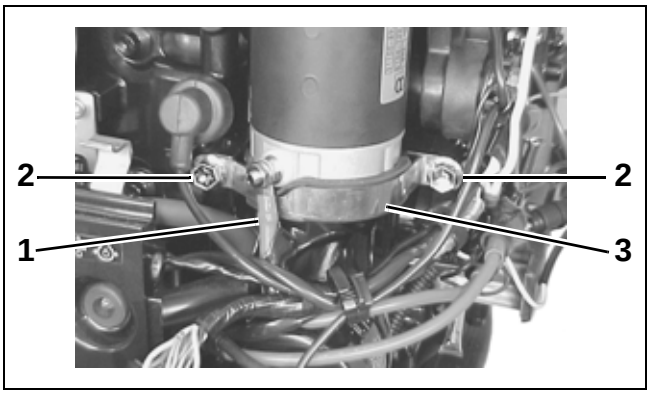

1. *Starter motor sub cable* 001706
2. *Bolts (2)*
3. *Starter motor band*

Install the negative (–) battery cable and the bolt.

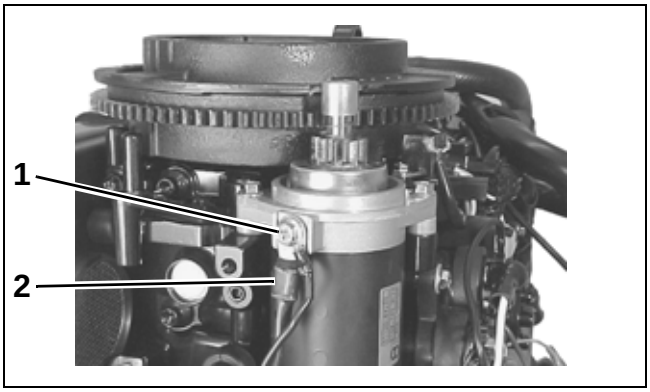

1. *Bolt* 001705
2. *Negative (–) battery cable*

Install the flywheel cover and three (3) bolts. Tighten the bolts securely.

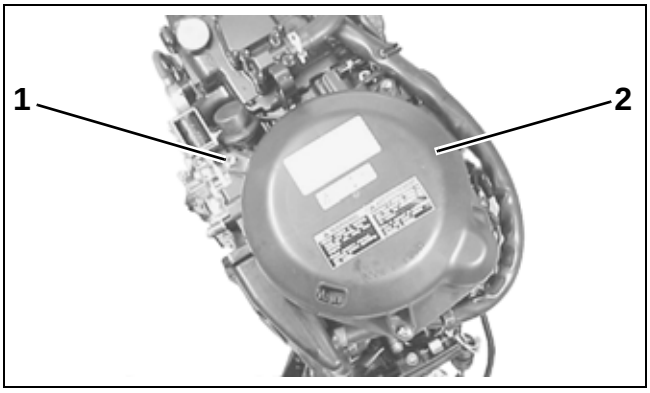

1. *Bolts (3)* 001394
2. *Flywheel cover*

Connect the battery cables to the battery.

NOTES

Technician's Notes

Related Documents

Bulletins	
Instruction Sheets	
Other	

FUEL SYSTEM

TABLE OF CONTENTS

FUEL LINES 100
REMOVAL AND INSTALLATION 100
FUEL HOSE CONNECTIONS 100
CARBURETORS 101
REMOVAL 101
DISASSEMBLY 103
CLEANING AND INSPECTION 104
ASSEMBLY 105
INSTALLATION 107
THROTTLE CONTROL 109
THROTTLE LINKAGE ADJUSTMENTS 109
THROTTLE CABLE INSTALLATION AND ADJUSTMENT 110
FUEL PUMP 111
REMOVAL 111
DISASSEMBLY 111
INSPECTION 112
ASSEMBLY 112
INSTALLATION 113
OPERATION 114
CARBURETOR 114
ACCELERATOR PUMP SYSTEM 115
NOTES 116

FUEL LINES

Removal and Installation

Pay special attention to the following when removing or installing fuel hoses:

- Do not over bend, kink, or twist hoses during installation.
- When installing hose clamps or clips, position the tabs to avoid contact with other parts.
- Make sure hoses do not contact rods, levers, or other moving parts.
- Take care not to cut, abrade, or cause any other damage to hoses.
- Take care not to excessively compress hoses when tightening clamps.

Checking for Fuel Leakage

WARNING

After servicing the fuel system, check for leaks. Failure to check for fuel leakage could allow a leak to go undetected, resulting in fire or explosion.

Squeeze the fuel primer bulb until resistance is felt.

Once pressurized, check all connections and components for any signs of leakage.

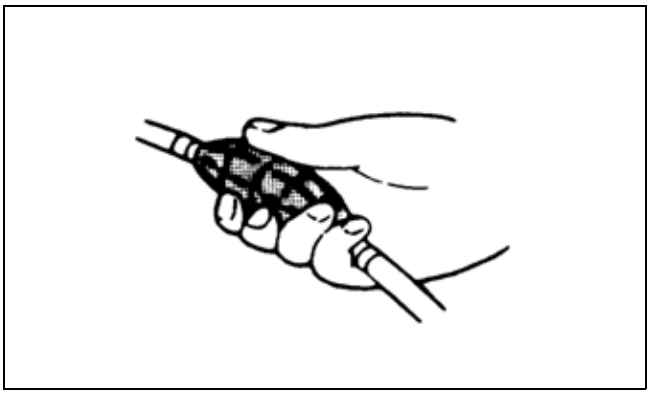

001608

Fuel Hose Connections

Note that fuel hose connections vary according to each type of pipe. Connect each hose correctly by referring to the following figure.

Install the hose clamp 0.1 to 0.3 in. (3 to 7 mm) from the end of the hose.

- For type “A” (short barbed end) pipe, the hose must completely cover the pipe.
- For type “B” (bent end) pipe, the hose must cover the straight part of the pipe by 0.8 to 1.2 in. (20 to 30 mm).
- For type “C” pipe, the hose must fit up against the flanged part of the pipe.
- For type “D” pipe, the hose must cover the pipe by 0.8 to 1.2 in. (20 to 30 mm).

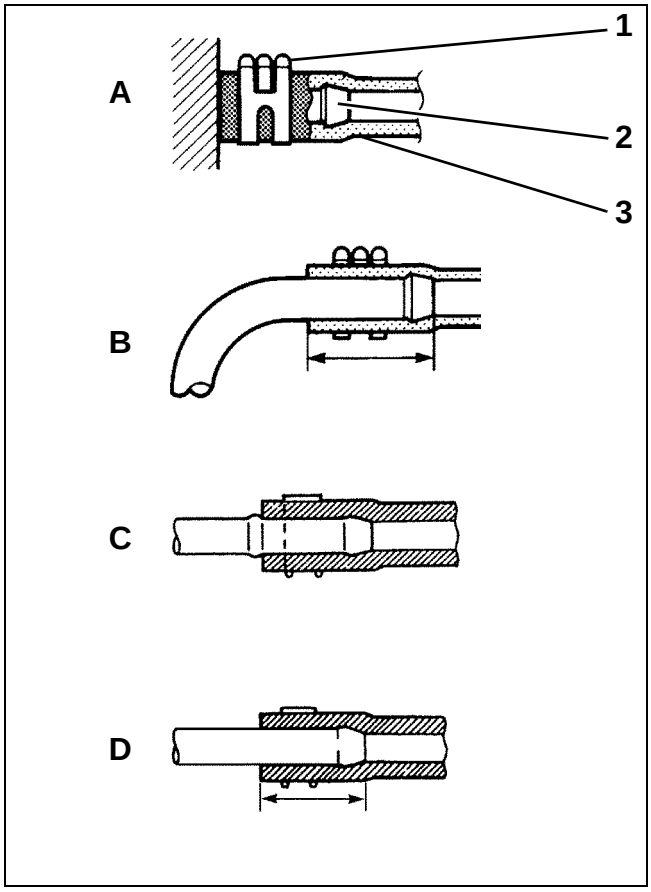

001609

1. *Clamp*
2. *Pipe joint*
3. *Hose*

CARBURETORS

Removal

Remove three (3) bolts and the flywheel cover.

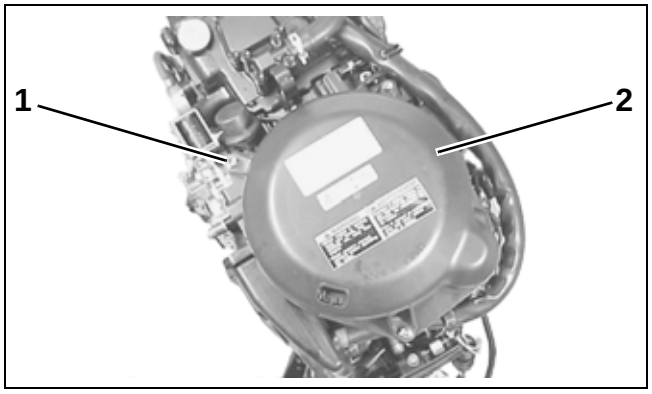

1. Bolts (3)
2. Flywheel cover
001394

Remove four (4) bolts and the starboard side cover.

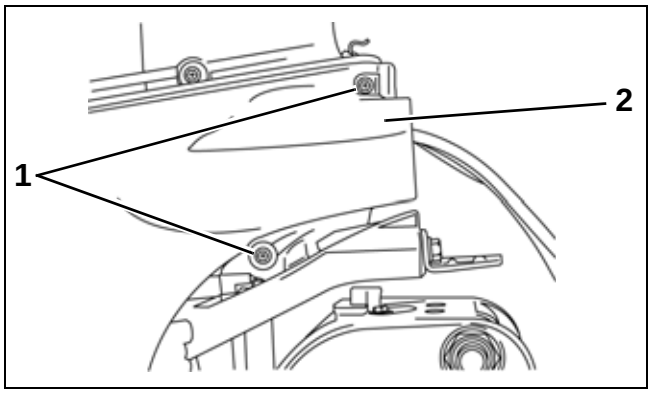

1. Screws (2)
2. Starboard side lower cover
001723

Remove two (2) bolts that secure the silencer case.

Remove two (2) bolts that secure the air silencer pipe to the crankcase.

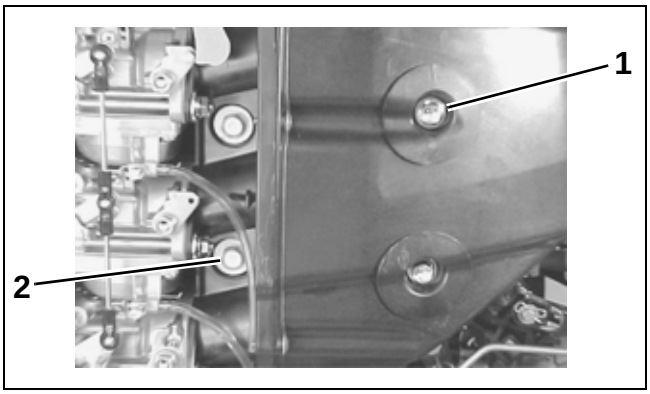

1. Air silencer case bolts (2)
2. Air silencer pipe bolts (2)
001610

Tiller handle models only: Remove the E-ring and the choke rod from the bottom carburetor.

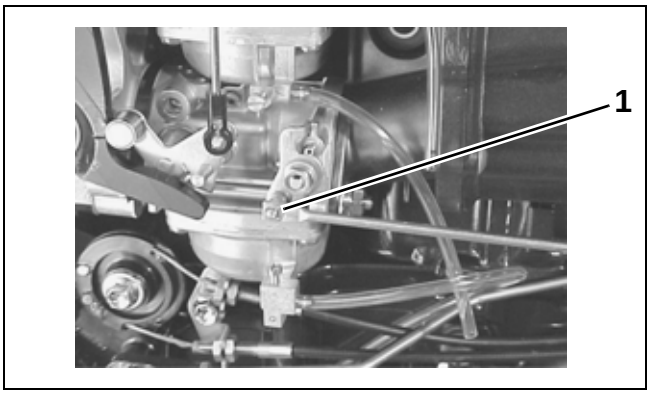

1. Choke rod
001611

Remove the throttle control rod from the throttle cam.

Remove the bolt, the fuel filter bracket, and the fuel filter.

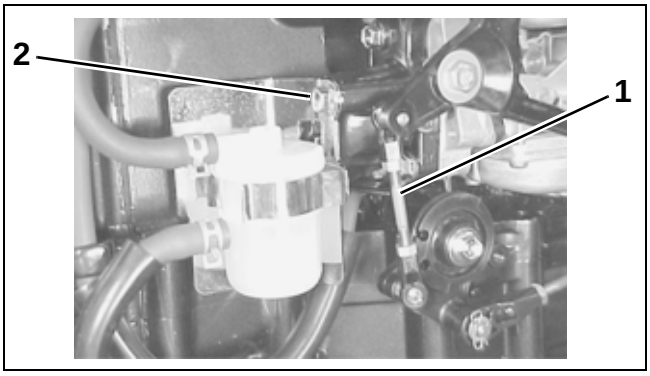

1. Throttle control rod 001612
2. Fuel filter bracket bolt

Remove the fuel pump. Refer to “FUEL PUMP” on page 111.

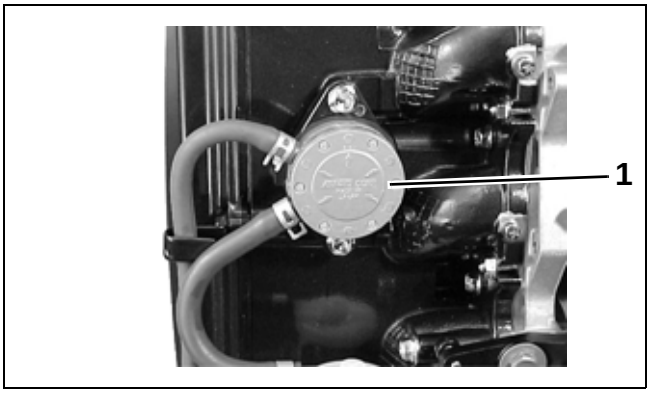

1. Fuel pump 001635

Remove four (4) bolts and two (2) nuts that secure the inlet case to the intake manifold.

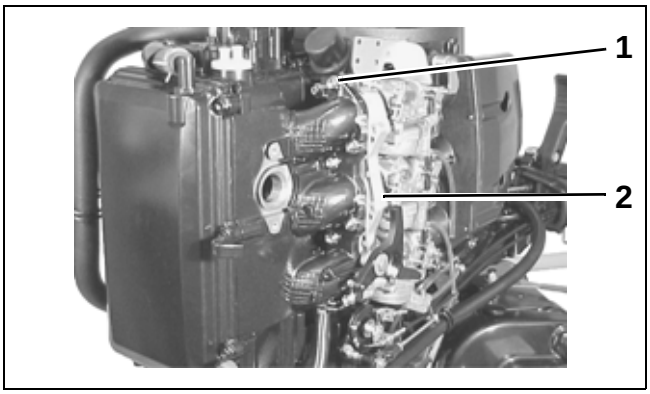

1. Bolts (4) 001613
2. Inlet case

Remove the carburetor/inlet case assembly, then remove the fuel inlet hose from the bottom 3-way joint.

Remove four (4) screws and the air silencer case.

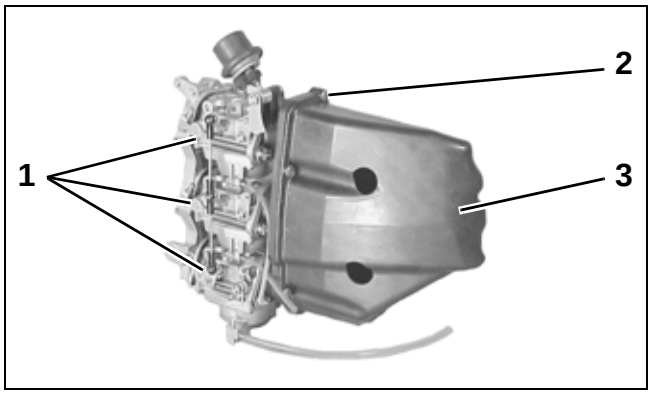

1. Carburetors (3) 001614
2. Screws (4)
3. Air silencer case

Remove the choke rods and the throttle link rods from each carburetor.

Remove the bolts and the choke solenoid (TEL models only) or the carburetor protector (tiller handle model only).

Loosen the carburetor flange nuts, then remove the nuts.

Remove the plates, the air silencer pipe, the carburetors, the insulators, and the gaskets from the inlet case. Discard the carburetor gaskets.

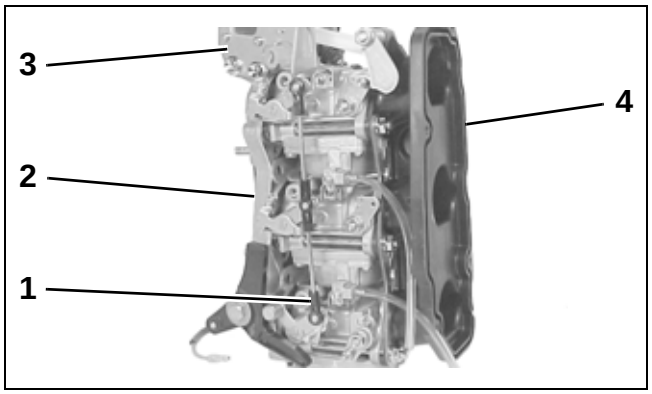

1. *Throttle link rod* 001615
2. *Inlet case*
3. *Choke solenoid or carburetor protector*
4. *Air silencer pipe*

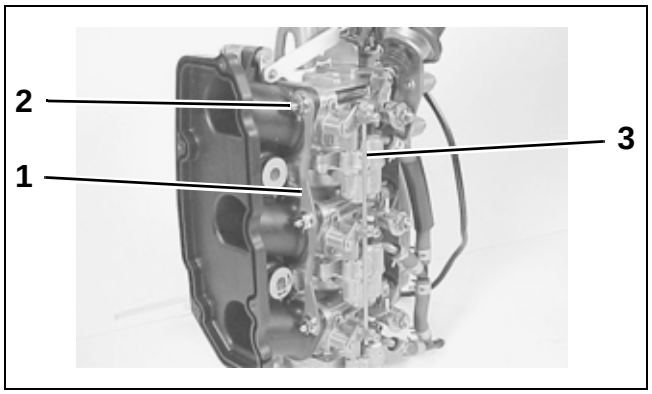

1. *Flange nuts (6)* 001616
2. *Plates*
3. *Choke rod*

Disassembly

When disassembling the carburetor, refer to the following figure. Remove the indicated parts.

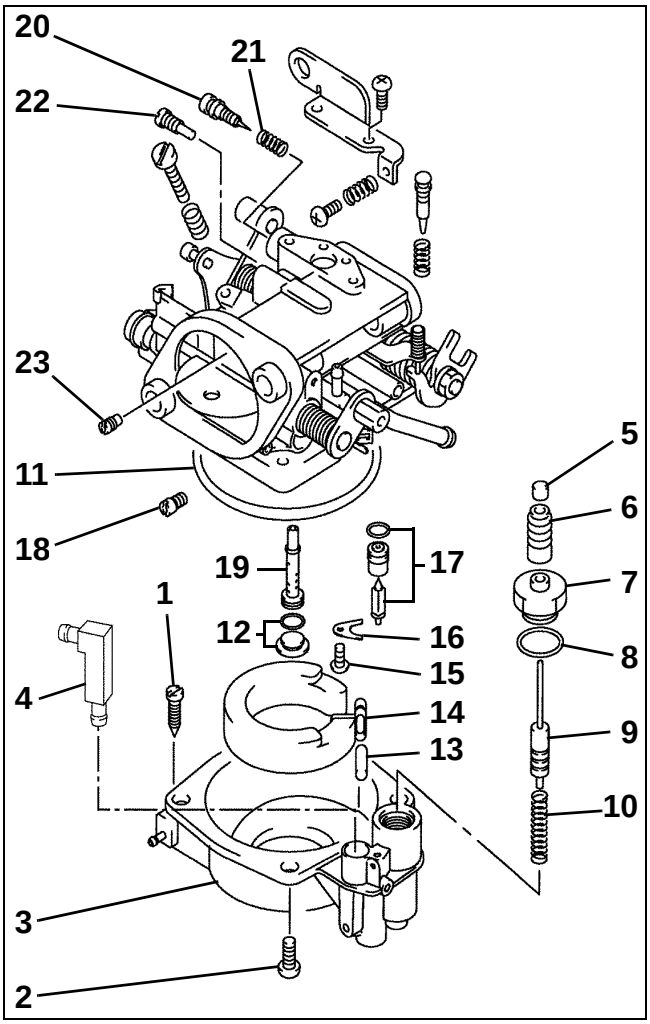

1. *Drain screw* 001620
2. *Screw*
3. *Float chamber*
4. *Tube*
5. *End cap*
6. *Cap*
7. *Holder*
8. *O-ring*
9. *Plunger*
10. *Spring*
11. *Float chamber gasket*
12. *Main nozzle cap and O-ring*
13. *Float pin*
14. *Float*
15. *Screw*
16. *Plate*
17. *Needle valve assembly*
18. *Main jet*
19. *Main nozzle*
20. *Pilot screw*
21. *Spring*
22. *Pilot jet*
23. *Main air jet*

IMPORTANT: For carburetors with pilot screw covers, DO NOT remove the cover and the pilot screw.

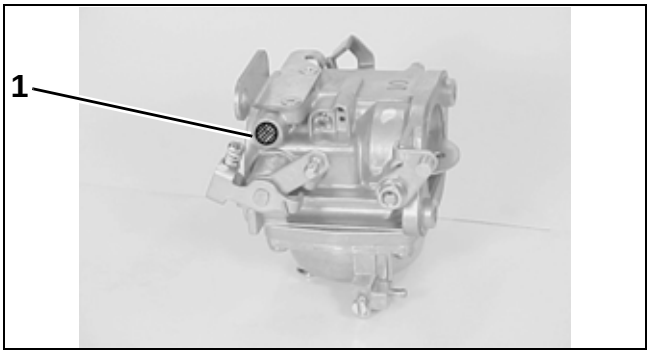

1. Pilot screw cover 001621

Cleaning and Inspection

Before inspection, all carburetor components must be thoroughly cleaned.

IMPORTANT: Never clean a carburetor by submerging or soaking it in a hot tank or carburetor cleaner. Do not expose plastic or rubber parts to any carburetor cleaner.

- Carburetor must be completely disassembled.
- Clean parts with *Carburetor and Choke Cleaner.*
- Use a clean bristle brush to remove gum or varnish deposits.

⚠ WARNING ⚠

To avoid personal injury, wear eye protection and set compressed air pressure to less than 25 psi (172 kPa).

- Blow dry with shop air. When drying passages, direct the flow of shop air opposite to the direction of fuel flow.

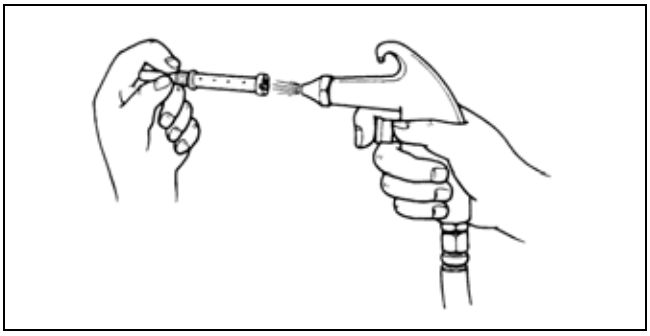

001622

IMPORTANT: DO NOT use wire or small drill bits to clean the carburetor orifices and jet.

Carburetor Body

Check all drillings and passages with a syringe filled with isopropyl alcohol.

Inspect the carburetor body for cracks or other damage. Inspect all gasket surfaces for nicks or irregularities.

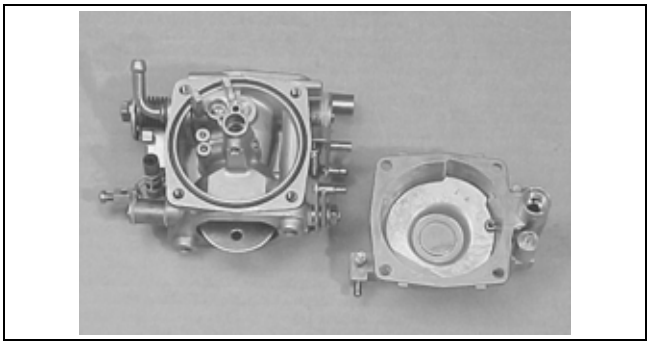

001623

Needle Valves

Inspect the tapered end of the needle valve for nicks, scratches, grooves, or signs of distortion.

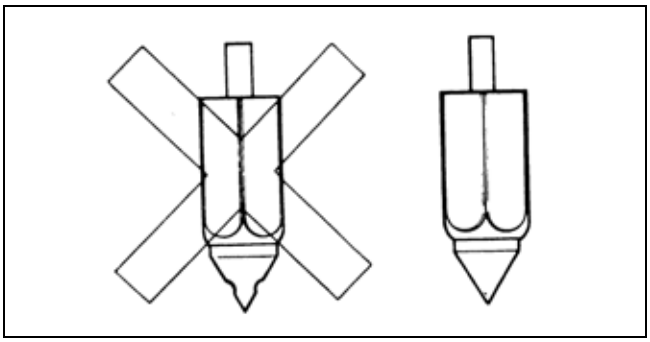

001626

Jet and Nozzle

Inspect the jet and nozzle for obstructions, cracks, and other damage.

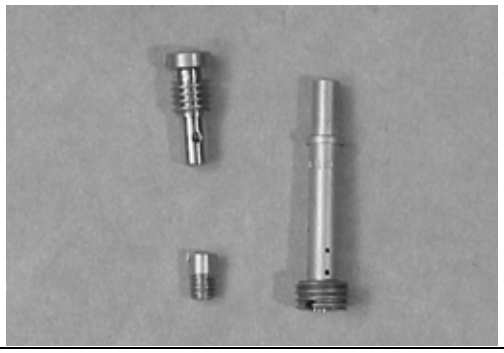

001625

Float

Inspect the float for cracks or other damage.

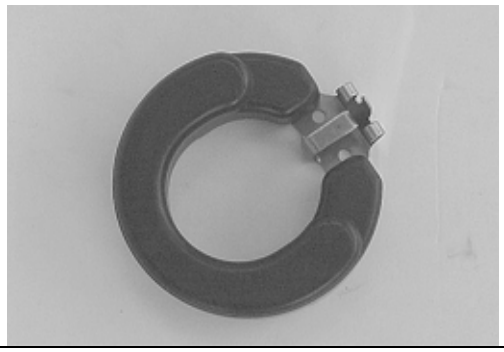

001627

Pilot Screw (for applicable carburetor only)

Inspect pilot screws for wear, damaged threads, broken tips.

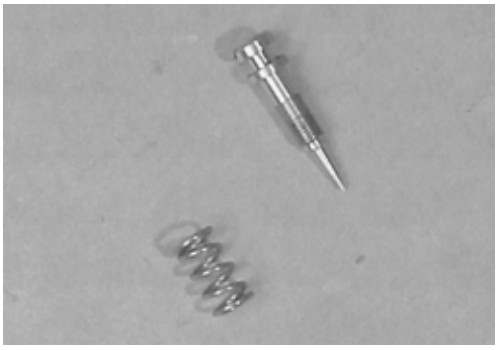

001624

Assembly

When installing new parts from a carburetor rebuild kit, inspect gaskets and compare to original gaskets to ensure all holes are correctly punched. Also, inspect new gaskets for any loose fibers or particles of gasket material.

IMPORTANT: Before proceeding, make sure that all parts are clean. Make sure that all replacement parts match the original ones in size and shape. Replace all gaskets, O-rings, and sealing washers each time you assemble a carburetor.

Refer to the figure in the **Disassembly** procedure for proper assembly of the carburetor.

Checking the Float

Check for correct positioning and smooth movement of the float. The float controls the height of the fuel in the float chamber and is essential to carburetor calibration and function.

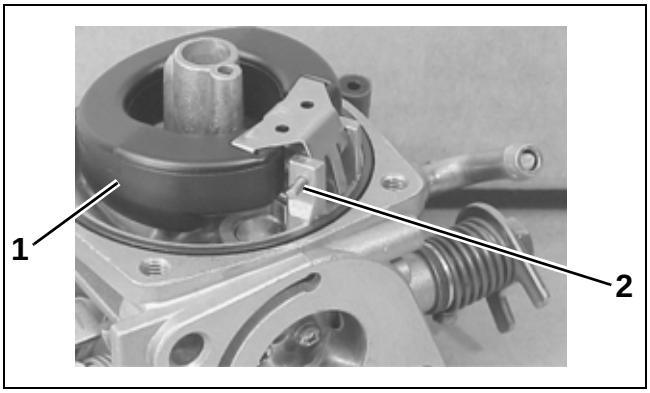

1. Float
2. Float pin

001629

Use vernier calipers to measure the height of the float. The float height should be 0.535 to 0.615 in. (13.6 to 15.6 mm).

IMPORTANT: Make sure that the weight of the float is not applied to the needle valve.

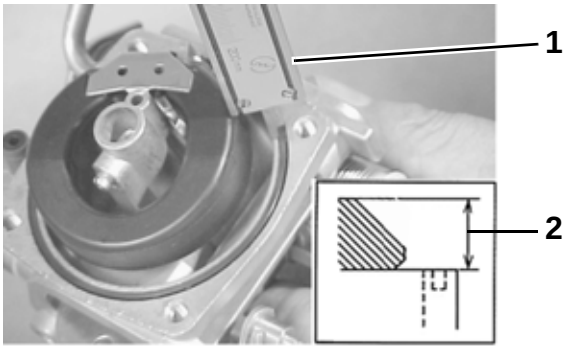

1. Vernier calipers 001630
2. Float height

If the float height is not correct, lightly bend the adjustment tab to adjust the height of the float. Be careful not to force the float needle valve into the seat.

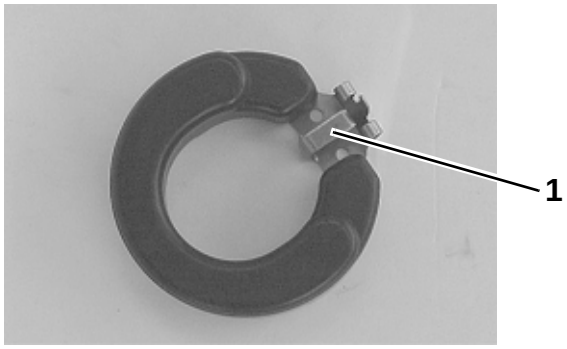

1. Adjustment tab 001627

Adjusting the Accelerator Pump Lever Gap

IMPORTANT: In normal use, adjustment of the accelerator pump lever is unnecessary. It has been adjusted at factory.

Adjust the gap between the accelerator pump lever and the pump plunger rod by turning the adjusting screw.

When the throttle valve is fully closed, there should be no gap.

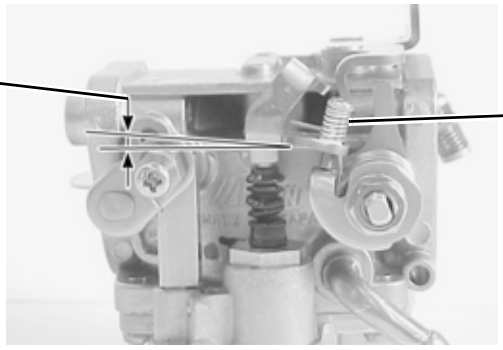

1. Adjusting screw 001631
2. Gap

Installation

CAUTION

Do not reuse gaskets. The sealing ability of used gaskets is insufficient. Air leakage will induce a lean air/fuel mix which will result in severe engine damage.

Install **new** carburetor gaskets, the insulators, the carburetors, the air silencer pipe, and the plates on the inlet case.

Install and tighten the carburetor flange nuts to a torque of 7 ft. lbs. (10 N·m).

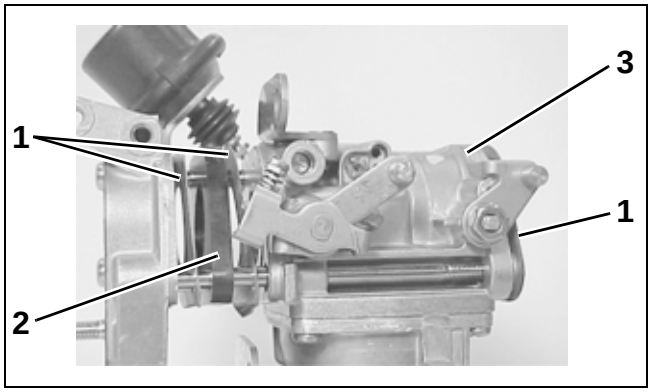

1. Gaskets 001617
2. Insulator
3. Carburetor

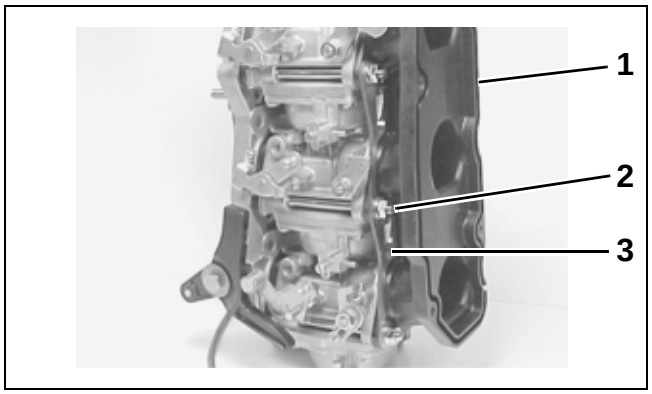

1. Air silencer pipe 001618
2. Flange nuts (6)
3. Plate

Install the choke solenoid (TEL models only) or the carburetor protector (tiller handle model only). Install and tighten the bolts securely.

Install the choke rods and the throttle link rods on each carburetor.

Install the air silencer case and four (4) screws.

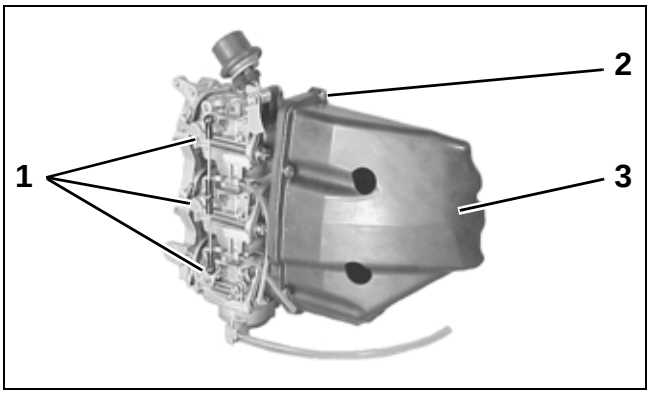

1. Carburetors (3) 001614
2. Screws (4)
3. Air silencer case

Install the fuel inlet hose on the bottom 3-way joint.

Install the carburetor/inlet case assembly to the intake manifold. Install and tighten four (4) bolts and two (2) nuts to a torque of 8 ft. lbs. (11 N·m).

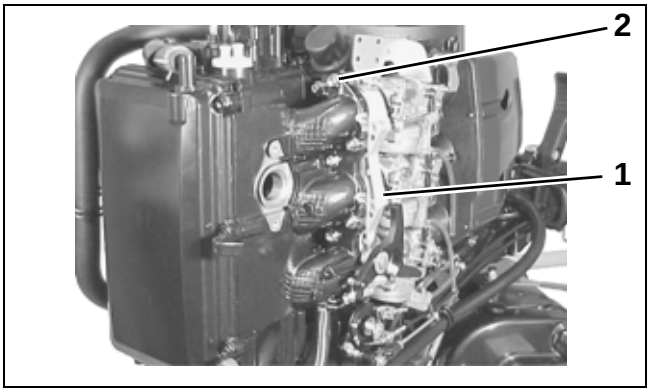

1. Inlet case assembly 001613
2. Bolts (4)

Install the fuel pump. Refer to “FUEL PUMP” on page 111.

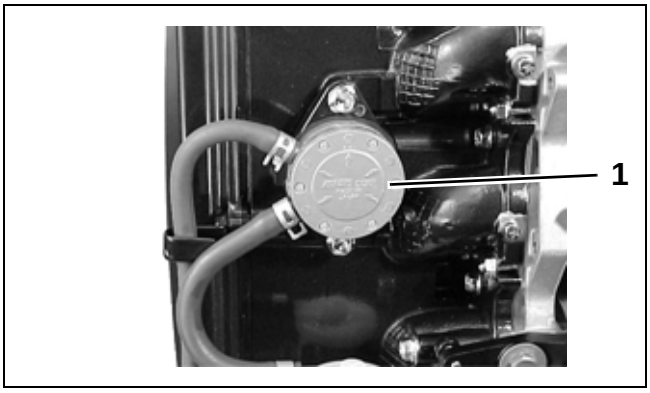

1. Fuel pump 001635

Install the fuel filter bracket and the bolt.

Install the throttle control rod on the throttle cam.

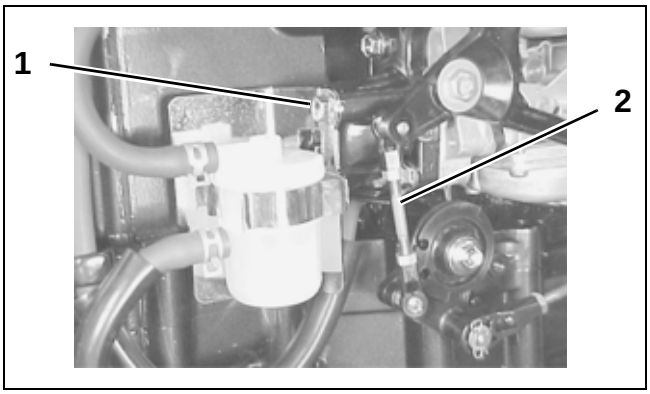

1. Fuel filter bracket bolt 001612
2. Throttle link rod

Install the choke rod and the E-ring on the bottom carburetor (tiller handle model only).

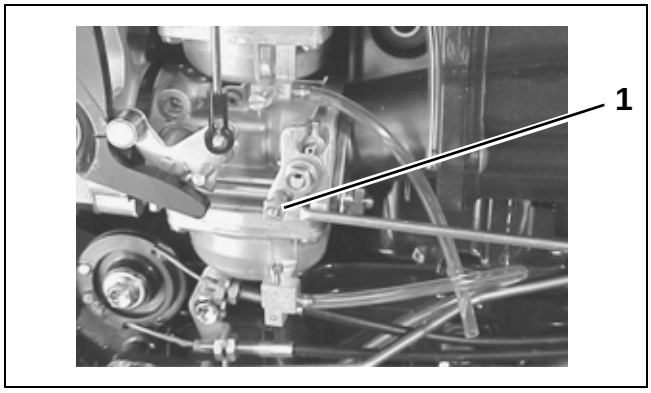

1. Choke rod 001611

Install and tighten two (2) bolts that secure the air silencer pipe to the crankcase.

Install and tighten two (2) bolts that secure the silencer case.

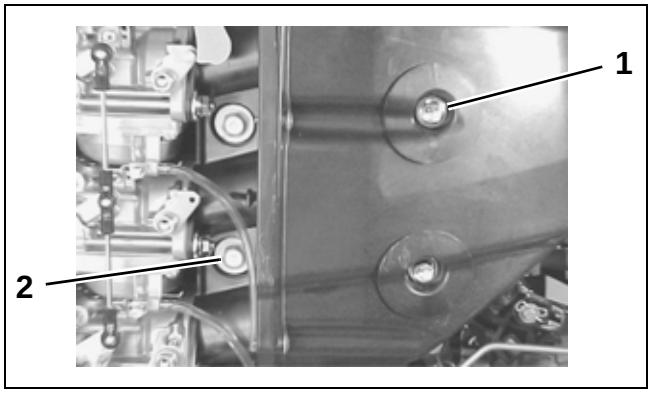

1. Air silencer case bolts (2) 001610
2. Air silencer pipe bolts (2)

Check the carburetor synchronization. Refer to “Synchronizing the Carburetor Throttle Valves” on page 56.

WARNING

After servicing the fuel system, check for leaks. Failure to check for fuel leakage could allow a leak to go undetected, resulting in fire or explosion.

THROTTLE CONTROL

Throttle Linkage Adjustments

When replacing a throttle linkage rod or a connector, refer to the following figures to adjust the length of the rod to the correct specification.

Make sure that an equal length of rod is threaded into each connector. Tighten the lock nut against the connector after adjusting the rod length.

Tiller Handle Models

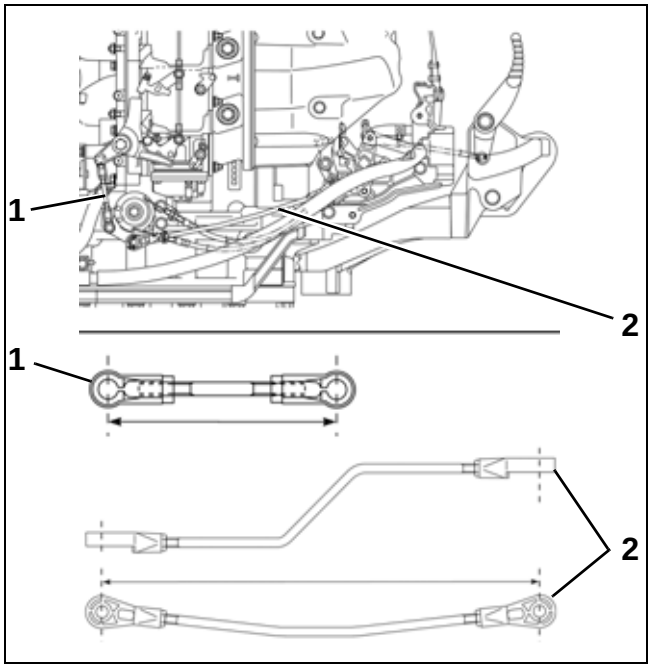

1. Throttle lever rod 001632
2. Throttle limiter rod

Rod Length Specifications	
Throttle lever rod	3.19 in. (81 mm)
Throttle limiter rod	9.47 in. (240.5 mm)

Remote Control Models

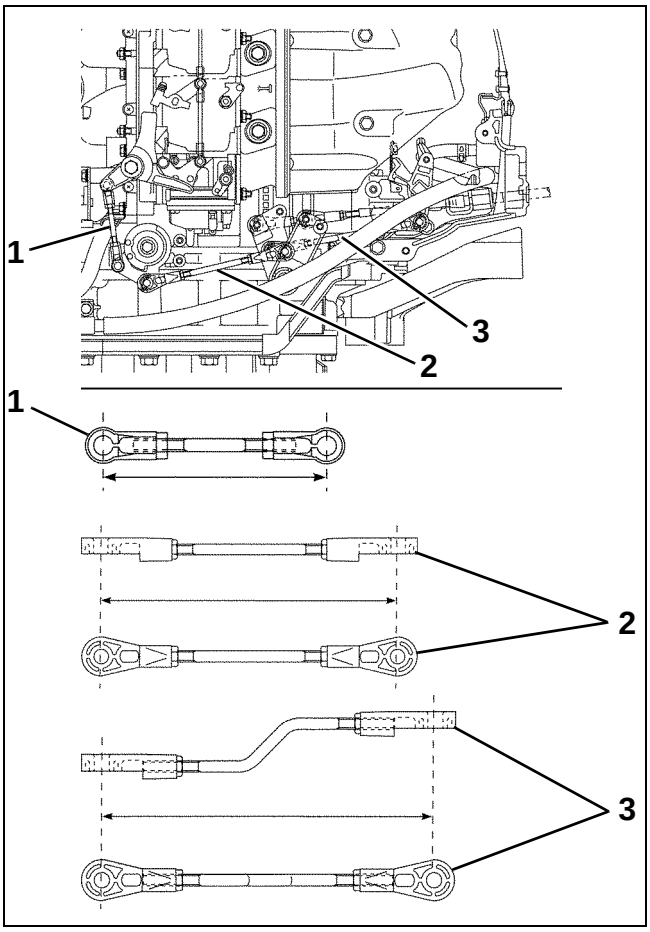

1. Throttle lever rod 001633
2. Throttle control rod
3. Shift rod

Rod Length Specifications	
Throttle lever rod	3.19 in. (81 mm)
Throttle control rod	5.51 in. (140 mm)
Shift rod	5.87 in. (149 mm)

Throttle Cable Installation and Adjustment

Rotate throttle control handle to fully close the throttle.

Align the match mark on the throttle cam with the center of the throttle lever roller. Hold this position.

Install the throttle cables to the throttle drum and the cable holder.

Turn the locknuts in the appropriate direction to install the inner cable with no sag. Tighten the locknuts to secure the throttle cable to the cable bracket.

Rotate the throttle control handle several times from fully closed to fully open.

With the throttle fully closed, make sure that the match mark on the throttle cam is aligned with the center of the throttle lever roller.

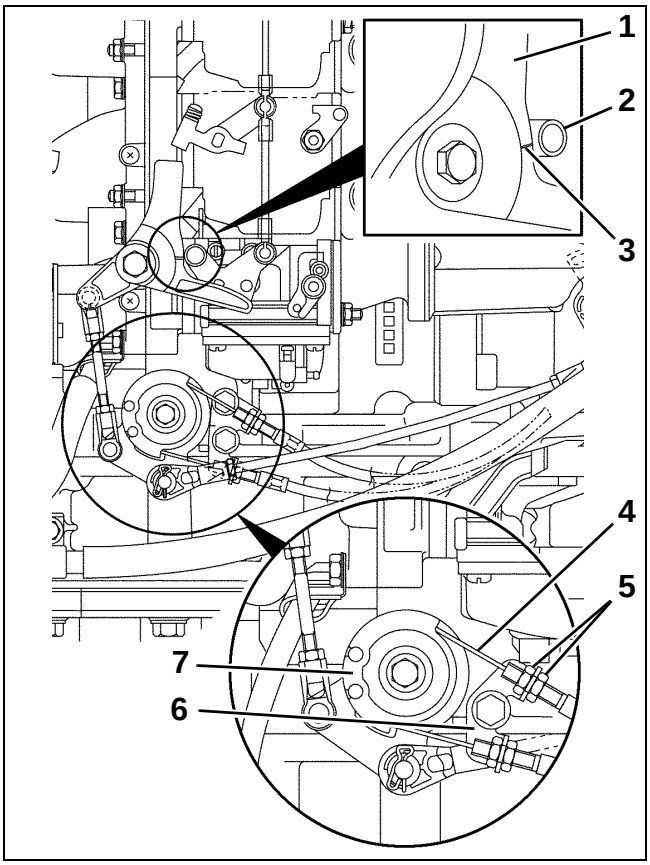

001634

1. *Throttle cam*
2. *Throttle lever roller*
3. *Match mark*
4. *Throttle cable*
5. *Locknuts*
6. *Cable holder*
7. *Throttle drum*

FUEL PUMP

IMPORTANT: Before replacing a suspect fuel pump, remove and clean the fuel filter and install a new filter element. Also, remove the fuel hose from the fuel tank and blow low-pressure compressed air through all passages and hoses to be sure they are open. This might be the cause of inadequate fuel delivery.

Removal

Disconnect the inlet hose and the outlet hose from the fuel pump.

Remove two (2) bolts.

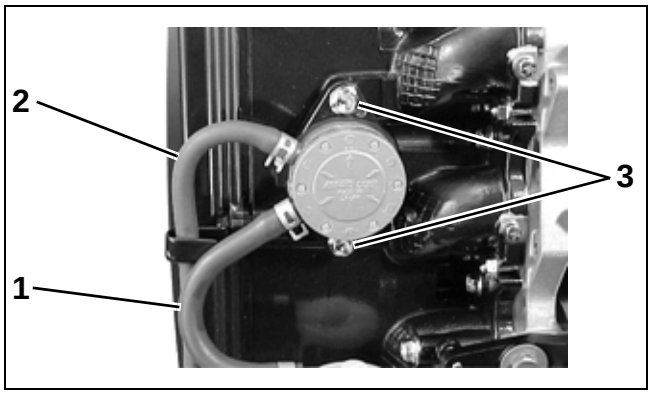

1. Inlet hose
2. Outlet hose
3. Bolts (2)

001635

Remove the fuel pump and the O-ring. Note the position of the pump rod before removal.

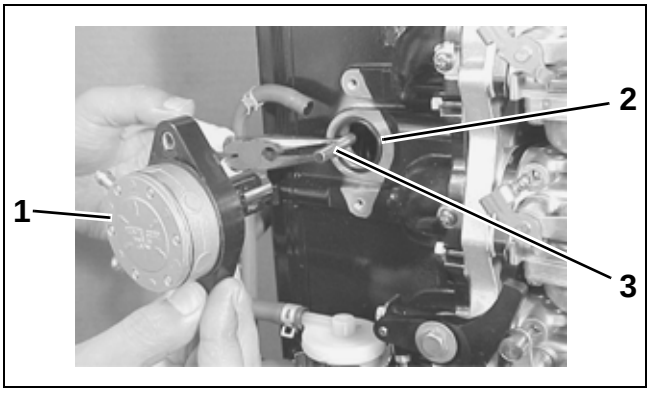

1. Fuel pump
2. O-ring
3. Pump rod

001636

Disassembly

IMPORTANT: For correct assembly, scribe an alignment mark across each part of fuel pump.

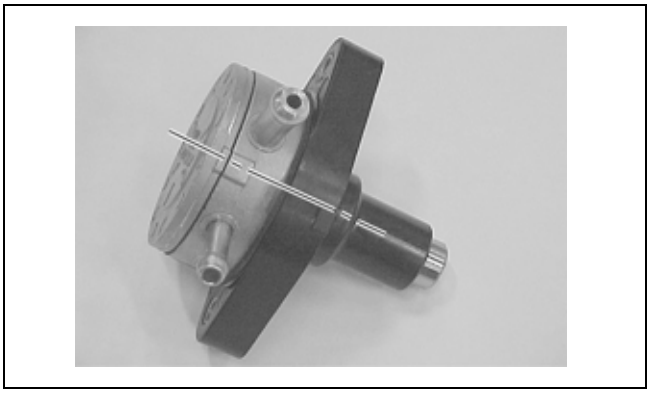

001638

Remove six (6) screws, the outer plate, the diaphragm, and the valve body.

Turn the piston until the pin comes out through the cutaway of the pump body. Remove the pin, the piston, the diaphragm rod, and the two springs.

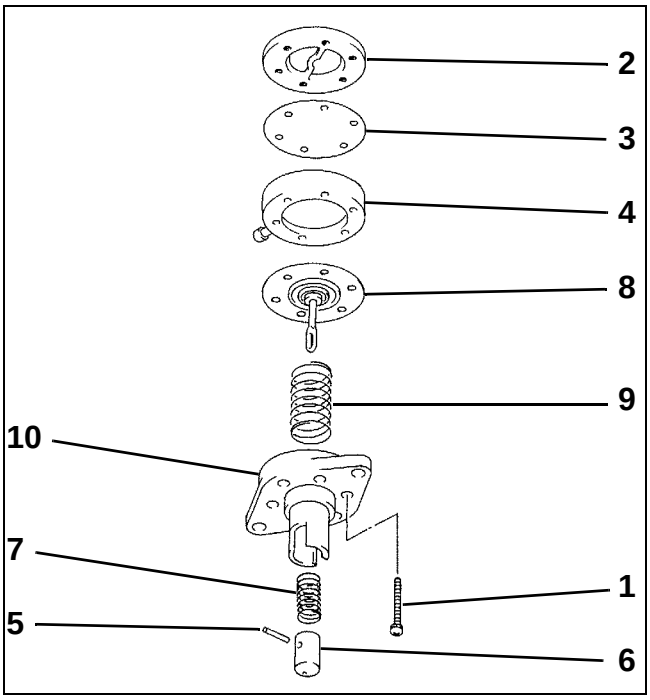

1. *Screws (6)* 001639
2. *Outer plate*
3. *Diaphragm*
4. *Valve body*
5. *Pin*
6. *Piston*
7. *Spring*
8. *Diaphragm rod*
9. *Spring*
10. *Pump body*

Inspection

Inspect the diaphragm and the diaphragm rod for distortions, tears, or other damage.

Inspect the fuel pump body and outer plate for cracks, nicks, distortion, or other damage.

Inspect the check valves in the valve body for damage.

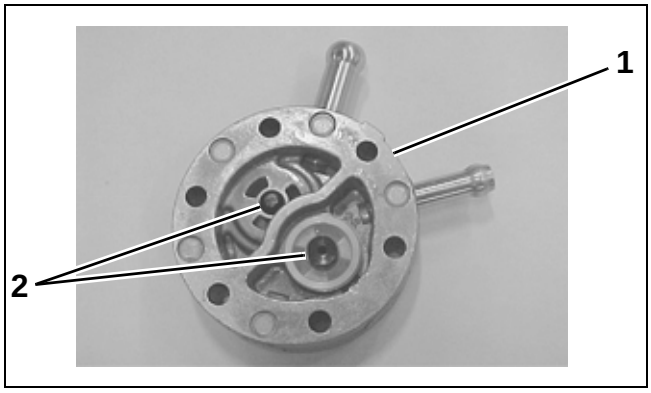

1. *Valve body* 001640
2. *Check valves*

Assembly

Install the two springs, the diaphragm rod, and the piston in the pump body. Connect the diaphragm rod to the piston with the pin.

After connecting the diaphragm rod to the piston, align the six bolt holes in the diaphragm rod with the bolt holes in the pump body by turning the piston and diaphragm rod together. This prevents the pin from coming out through the cutaway in the pump body.

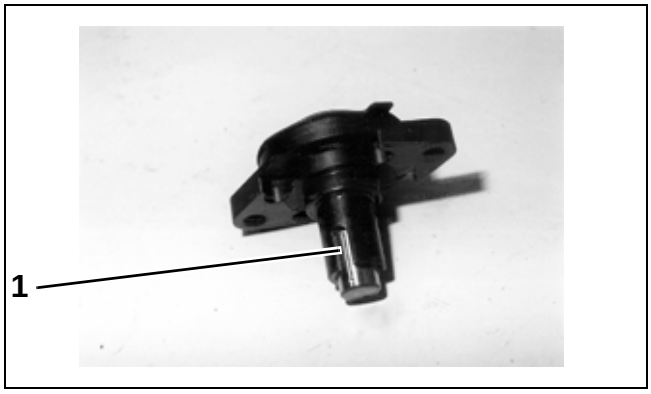

1. *Cutaway in pump body* 001640

Install the valve body, the diaphragm, and the outer plate in the pump body. Make sure that the alignment marks across the components line up. Secure the outer plate with six (6) screws.

Installation

Rotate the crankshaft until the top cylinder piston is at TDC on the compression stroke.

Install the pump rod, a **new** O-ring, and the fuel pump. Install and tighten two (2) bolts to a torque of 7 ft. lbs. (10 N·m).

Connect the inlet hose and the outlet hose to the fuel pump. Tighten the hose clamps securely.

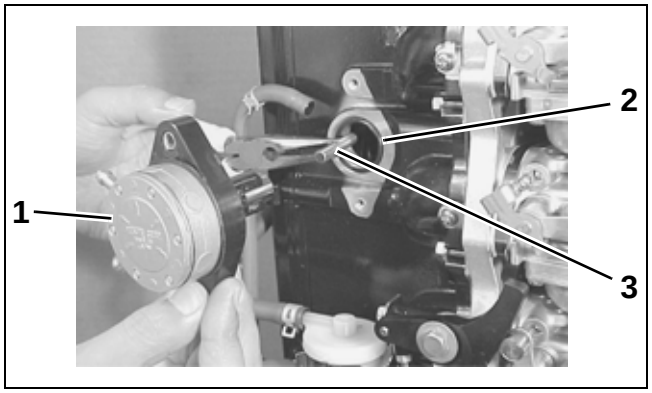

1. Fuel pump
2. O-ring
3. Pump rod

001636

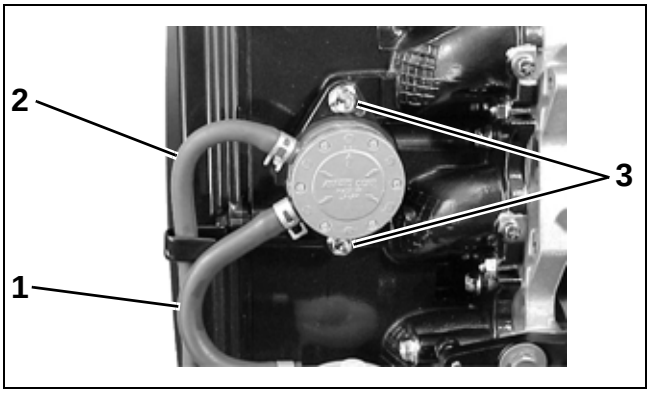

1. Inlet hose
2. Outlet hose
3. Bolts (2)

001635

6

OPERATION

Carburetor

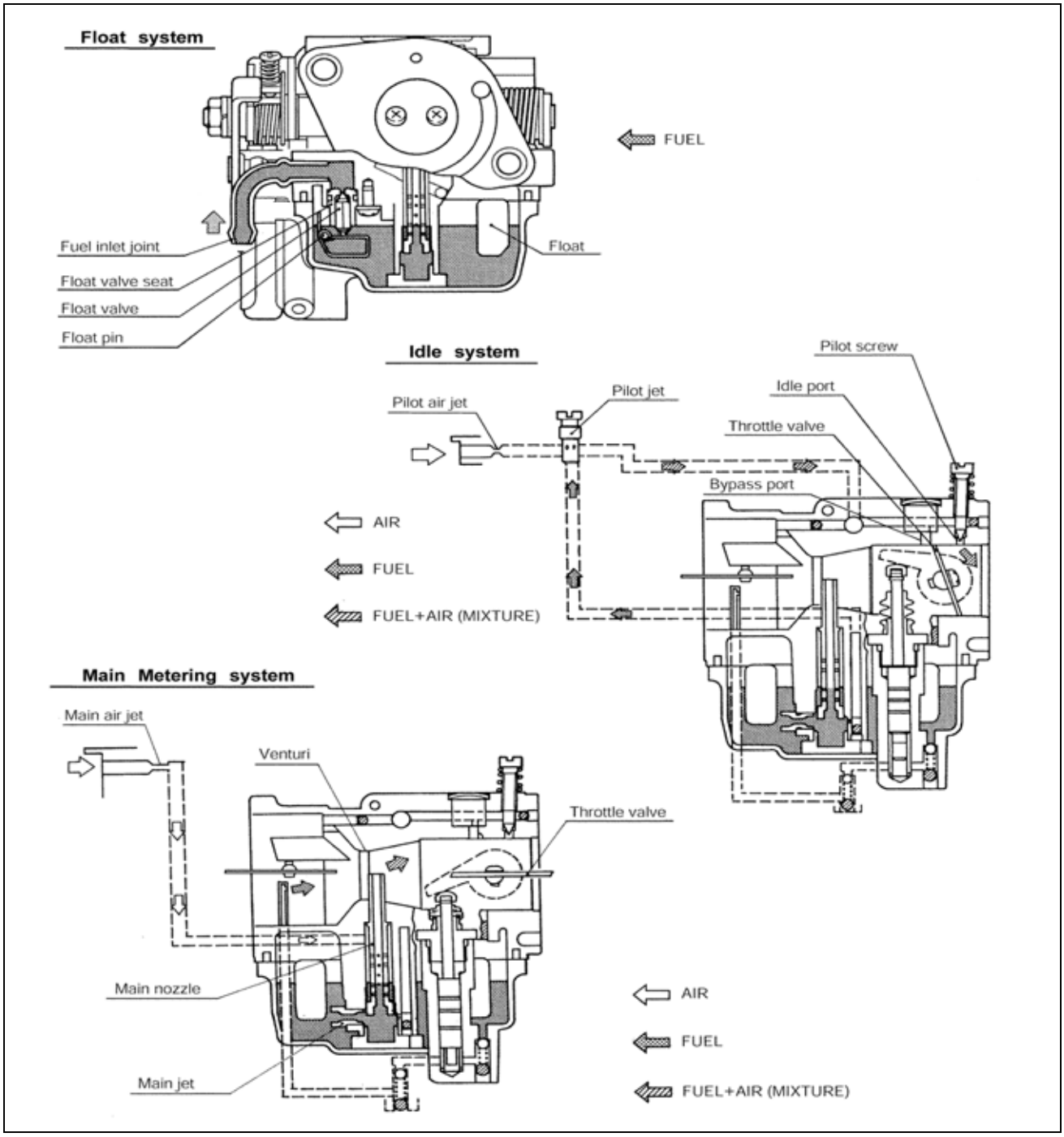

001650

Accelerator Pump System

The 30 HP models are equipped with an accelerator pump system. This system consists of an accelerator pump on each carburetor with brass tubes connecting the pump to the fuel output nozzles on each carburetor.

A normal engine characteristic during hard acceleration is hesitation caused by an imbalance in the fuel/air ratio. This is due to the rapid rate of increase in intake air volume when the throttle is opened quickly with the air velocity and fuel flow rate following at a slower rate of increase. The accelerator pump system overcomes this characteristic.

The accelerator pump system's function is to provide a balanced fuel/air ratio during acceleration only by adding a specific volume of fuel to enrichen the mixture. When the throttle is opened, the accelerator pump lever pushes down on the pump rod and plunger. As the plunger pushes against the fuel, the check ball in the inlet passage closes. Fuel is pushed out of the pump body through the brass tube and outlet nozzle, spraying into carburetor bore.

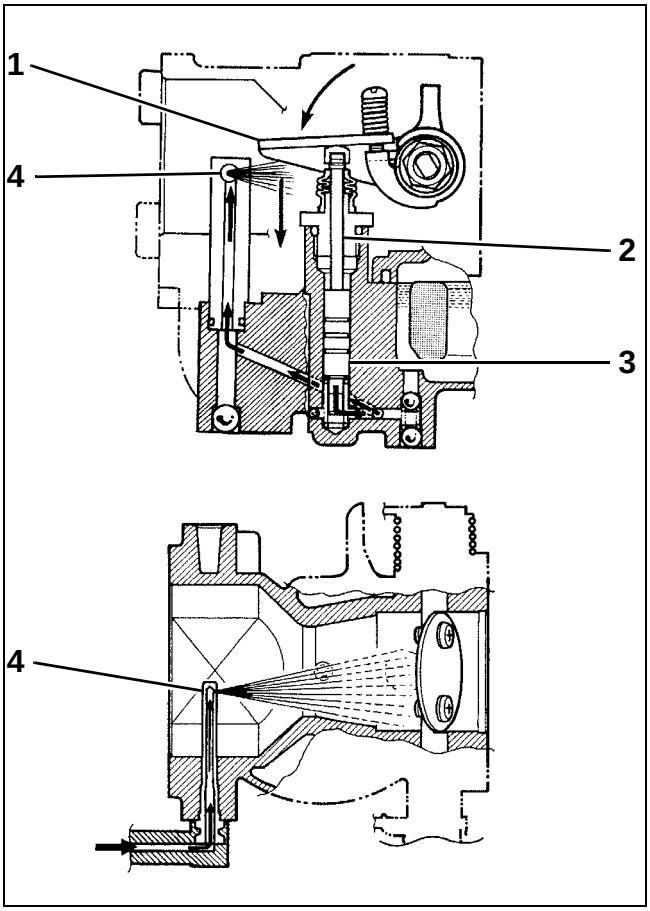

001651

1. *Pump lever*
2. *Pump rod*
3. *Plunger*
4. *Outlet nozzle*

NOTES

Technician's Notes

Related Documents

Bulletins	
Instruction Sheets	
Other	

POWERHEAD

TABLE OF CONTENTS

TEST PROCEDURES 118
CYLINDER COMPRESSION TEST 118
ENGINE OIL PRESSURE TEST 119
REMOVAL AND INSTALLATION 120
REMOVAL 120
INSTALLATION 125
TIMING CHAIN AND TENSIONER 131
REMOVAL 131
INSPECTION 133
INSTALLATION 133
CYLINDER HEAD 136
REMOVAL 136
INSTALLATION 136
DISASSEMBLY 137
INSPECTION AND SERVICING 139
ASSEMBLY 147
PISTON, CYLINDER, AND CRANKSHAFT 150
REMOVAL 150
INSPECTION AND SERVICING 152
INSTALLATION 164
THERMOSTAT 169
REMOVAL 169
INSPECTION 169
INSTALLATION 169
OPERATION 170
WATER COOLING SYSTEM 170
ENGINE LUBRICATION SYSTEM 171
NOTES 172

TEST PROCEDURES

Cylinder Compression Test

Start the engine. Allow the engine to warm up, then shut off the engine.

Remove the engine side covers.

Remove all spark plugs.

Install a compression gauge and adapter into the plug hole.

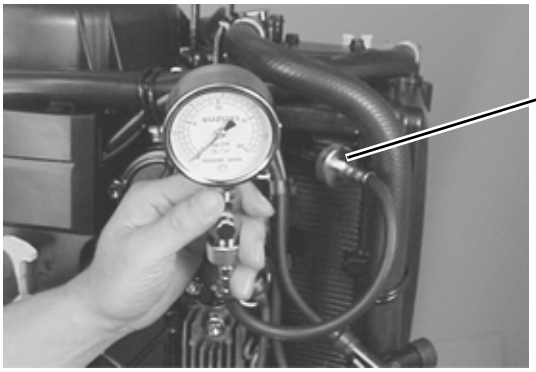

1. Spark plug hole 001377

REMOTE CONTROL MODELS

Disconnect the throttle cable from the throttle lever. Hold the throttle lever in wide open position.

TILLER HANDLE MODELS

Disconnect the throttle limiter rod from the throttle drum. Hold the throttle control grip in the wide open position.

⚠ WARNING ⚠

Disconnect the safety lanyard from the emergency stop switch prior to cranking the engine. This will prevent any residual fuel from the cylinders from being ignited by a spark from the spark plug cap.

While cranking the engine, note the maximum pressure reading on the gauge for each cylinder.

IMPORTANT: The values that are shown are only guidelines, not absolute service limits.

Cylinder Compression Test	
Standard	145 to 203 psi (1000 to 1400 kPa)
Maximum difference between cylinders	14 psi (100 kPa)

Low compression pressure can indicate one or more of the following:

- Excessively worn cylinder wall
- Worn piston
- Worn or stuck piston rings
- Poor seating of valves
- Ruptured or damaged cylinder head gasket

Install all parts that were removed.

Engine Oil Pressure Test

Check the engine oil level.

Remove the oil pressure switch. Install an oil pressure gauge and adapter into the oil pressure switch hole.

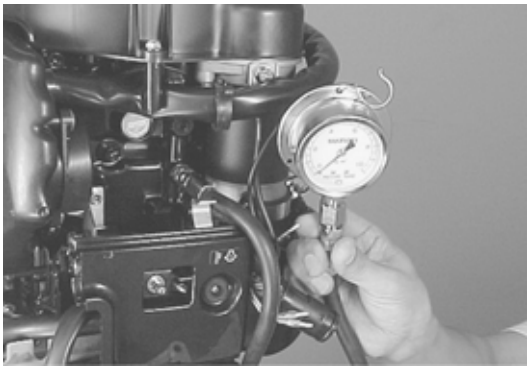

001376

Connect a tachometer to the engine in the following manner:

- Yellow lead wire to yellow/black lead wire of the power pack
- Gray lead wire to the positive (+) terminal of a 12 V battery
- Black lead wire to the negative (–) terminal of a 12 V battery
- Set the pole selection switch in the tachometer to “12”.

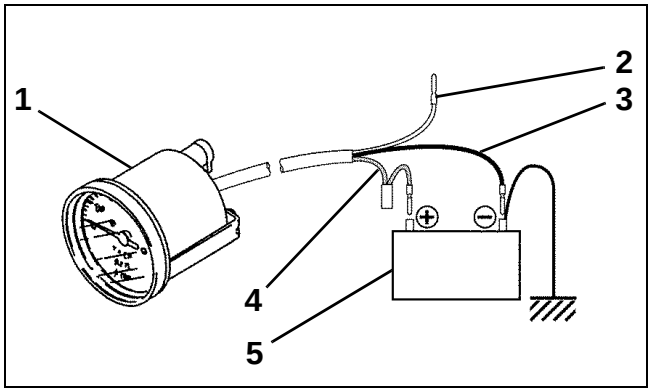

001331

1. *Tachometer*
2. *Yellow lead wire*
3. *Black lead wire*
4. *Gray lead wire*
5. *12 V battery*

Start the engine and warm up engine as follows:

- **Summer:** 5 minutes at 2000 RPM
- **Winter:** 10 minutes at 2000 RPM

After warm-up, shift the engine into forward gear and increase the engine speed to 3000 RPM. The oil pressure at this speed and normal operating temperature should be 58 to 72 psi (400 to 500 kPa).

If the oil pressure is lower or higher than specification, the following causes may be considered:

Low oil pressure

- Clogged oil filter
- Leakage from oil passages
- Defective oil pump
- Defective oil pressure regulator
- Damaged O-ring
- Combination of above items

High oil pressure

- Using an engine oil of too high viscosity
- Clogged oil passage
- Clogged oil pressure regulator
- Combination of above items

After testing, install the oil pressure switch.

REMOVAL AND INSTALLATION

Removal

WARNING

To prevent accidental starting while servicing, twist and remove the spark plug leads and disconnect the battery cables at the battery.

Drain the engine oil and remove the side covers. Refer to the **MAINTENANCE** section for these procedures.

Remove three (3) bolts and the flywheel cover.

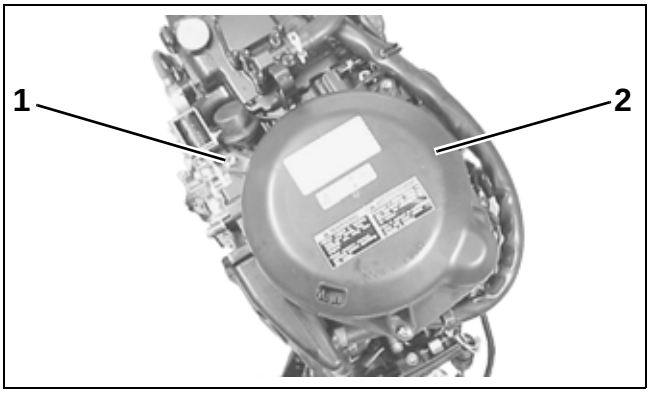

1. *Bolts (3)* 001394
2. *Flywheel cover*

Remove eight (8) cylinder head cover bolts, then remove the cylinder head cover and the breather hose.

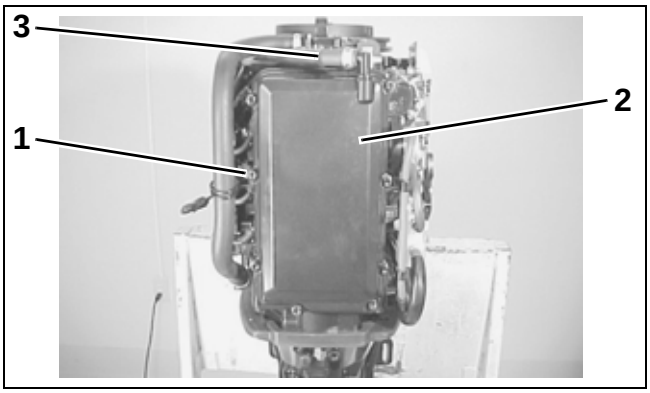

1. *Bolts (8)* 001395
2. *Cylinder head cover*
3. *Breather hose*

Tiller Handle Models

Remove the throttle cables from the throttle drum.

Remove the bolt, the throttle drum, the throttle lever rod, and the throttle limiter rod.

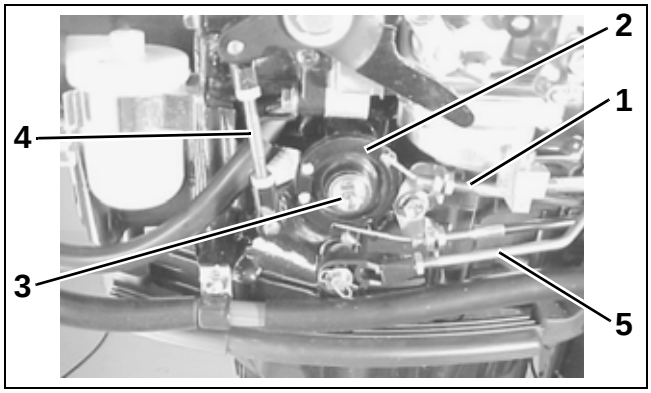

1. *Throttle cables* 001396
2. *Throttle drum*
3. *Bolt*
4. *Throttle lever rod*
5. *Throttle limiter rod*

Remove the shift lever link.

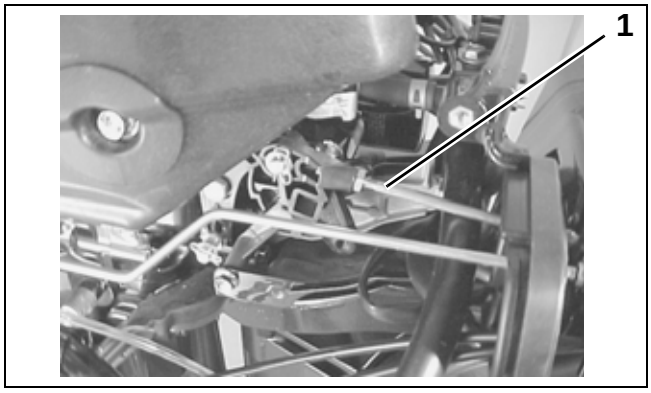

1. *Shift lever link* 001397

REMOTE CONTROL MODELS

Remove the bolt, the throttle drum, the throttle lever rod, and the throttle control rod.

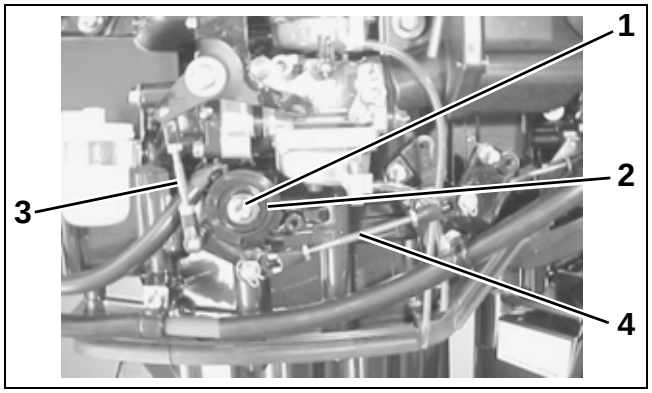

1. *Bolt* 001398
2. *Throttle drum*
3. *Throttle lever rod*
4. *Throttle control rod*

Remove the bolt, the throttle control lever, the throttle lever, and the throttle control rod.

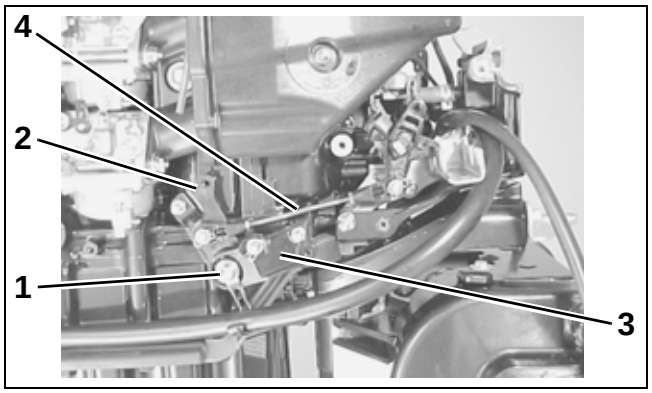

1. *Bolt* 001399
2. *Throttle control lever*
3. *Throttle lever*
4. *Throttle control rod*

ALL MODELS

Remove the fuel pump. Refer to the **FUEL SYSTEM** section.

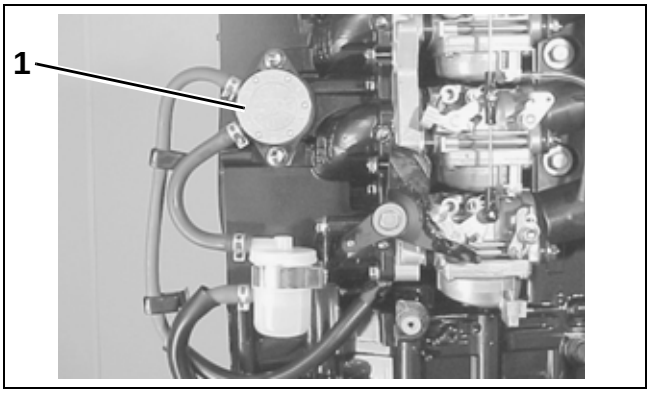

1. *Fuel pump* 001400

Remove the bolt, the fuel filter bracket, and the fuel filter.

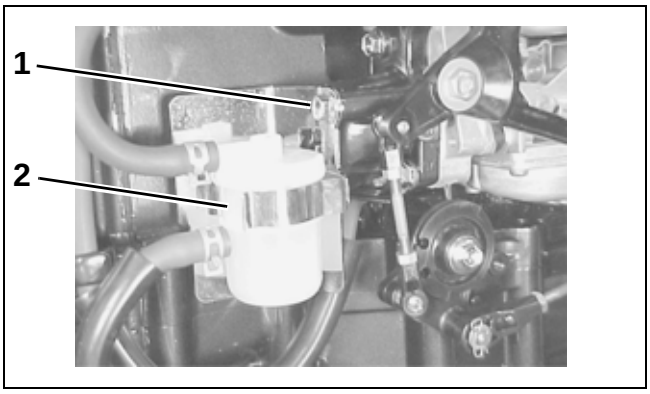

1. *Fuel filter bracket bolt* 001612
2. *Fuel filter*

Remove the inlet case and carburetor assembly. Refer to the **FUEL SYSTEM** section.

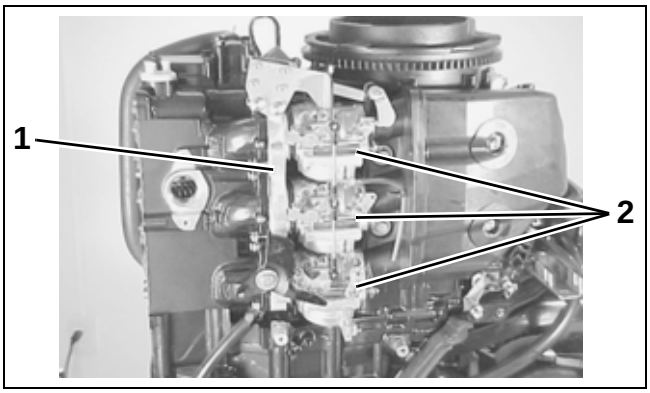

1. *Inlet case* 001402
2. *Carburetors (3)*

REMOTE CONTROL MODELS

Disconnect the choke solenoid lead wire.

ALL MODELS

Remove the starter motor. Refer to the **ELECTRICAL** section.

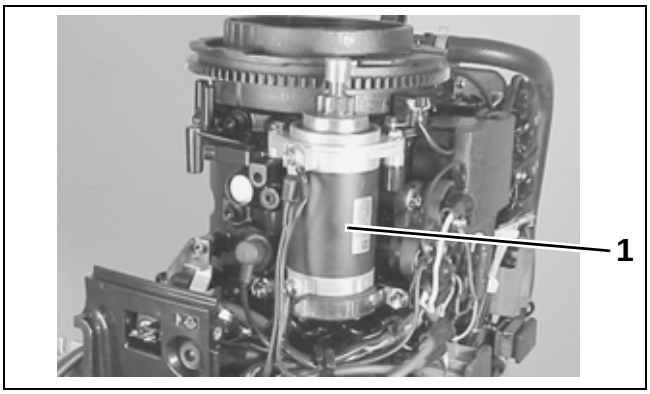

1. Starter motor 001403

Remove two (2) bolts, the neutral switch, and the switch bracket. Disconnect the neutral switch lead wire.

Loosen the screw and disconnect the oil pressure switch lead wire.

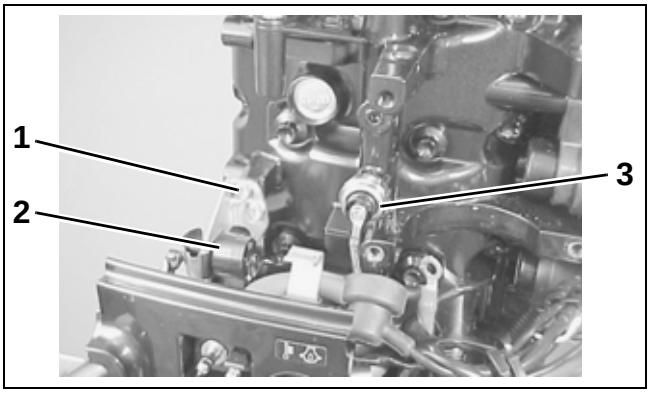

1. Bolts (2) 001404
2. Neutral switch
3. Oil pressure switch

Remove the two (2) bolts that secure the front panel.

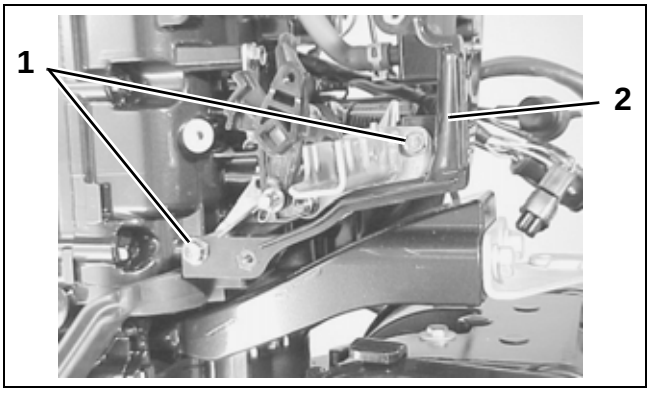

1. Bolts (2) 001405
2. Front panel

Remove the flywheel, the charge coil, and the crankshaft position sensors (CPS). Refer to the **ENGINE CONTROL** section.

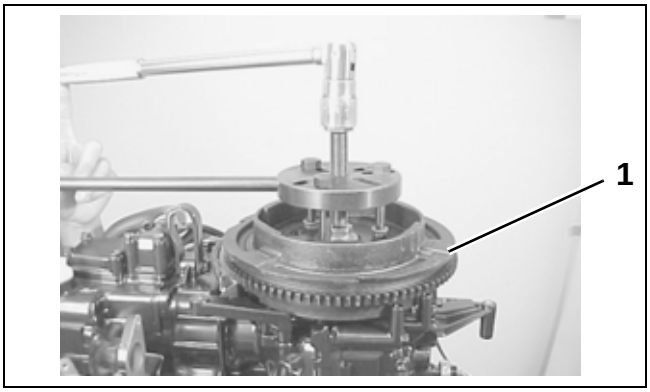

1. Flywheel 001406

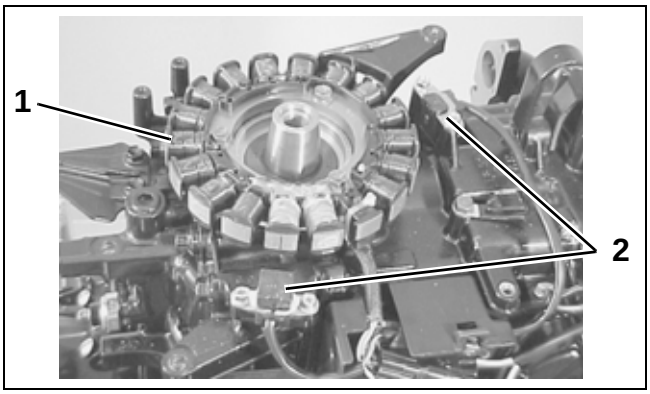

1. Battery charge coil 001407
2. Crankshaft position sensors (2)

Remove three (3) ignition coils. Disconnect the primary lead wire.

Remove two (2) bolts and the rectifier and regulator.

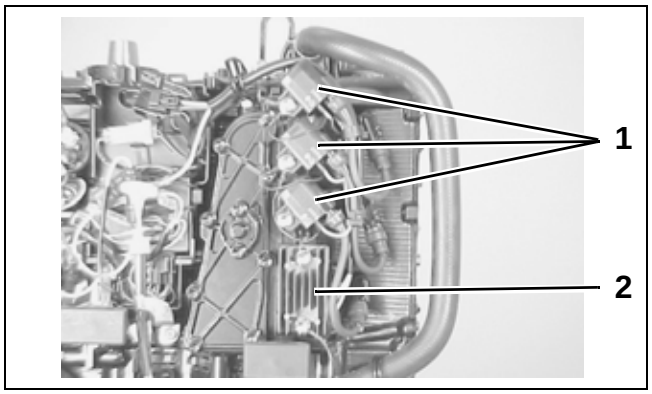

1. Ignition coils (3) 001408
2. Rectifier and regulator

Disconnect the water hose from the thermostat cover and the engine holder.

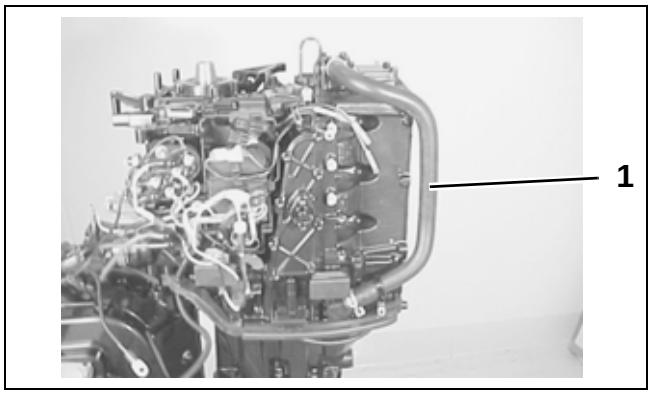

1. Water hose 001409

Remove three (3) bolts, then the starter motor relay and bracket.

For models with a power trim and tilt (PTT) unit, remove the bolts, then the PTT motor relay and bracket.

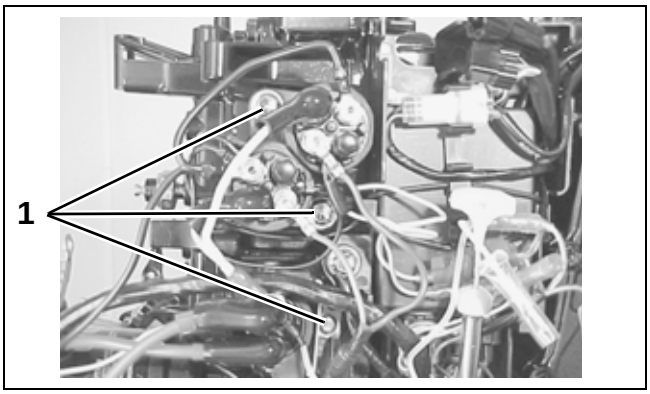

1. Bolts (3) 001410

Disconnect all engine wiring harness connectors from the power pack, then remove the power pack.

Remove two (2) bolts and the electric parts holder. Remove the bolt and the oil level dipstick guide.

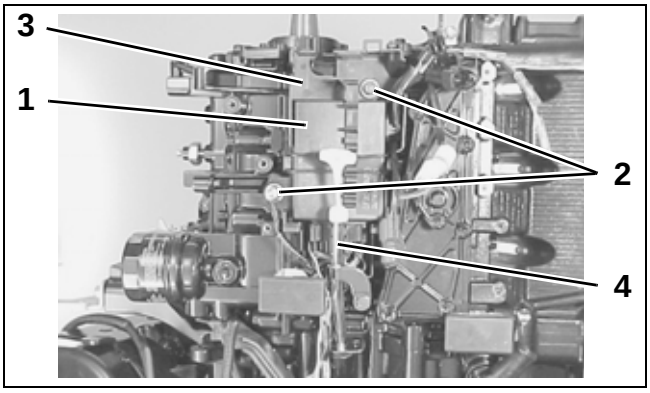

1. Power pack 001411
2. Bolts (2)
3. Electric parts holder
4. Oil level dipstick guide

Disconnect the clutch rod from the shift rod by loosening the locknut and the turnbuckle.

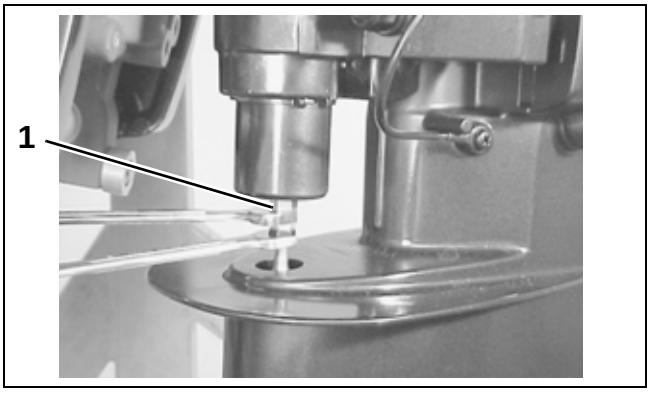

1. Locknut 001412

Remove the screw, the shift lever and shaft, and the shift shaft arm.

Remove two (2) bolts and the front panel bracket.

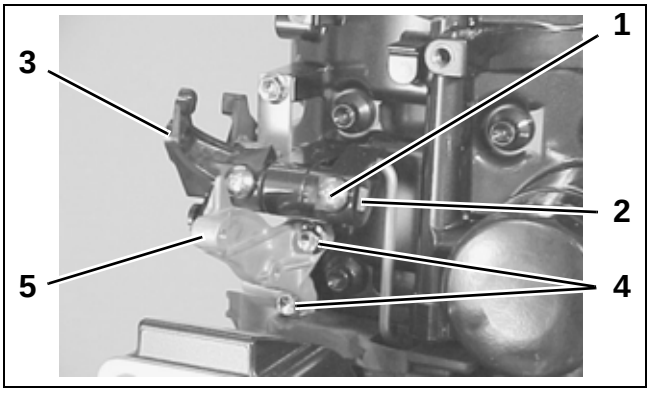

1. Screw 001413
2. Shift shaft arm
3. Shift lever and shaft
4. Bolts (2)
5. Front panel bracket

Remove two (2) pins and the side cover seal.

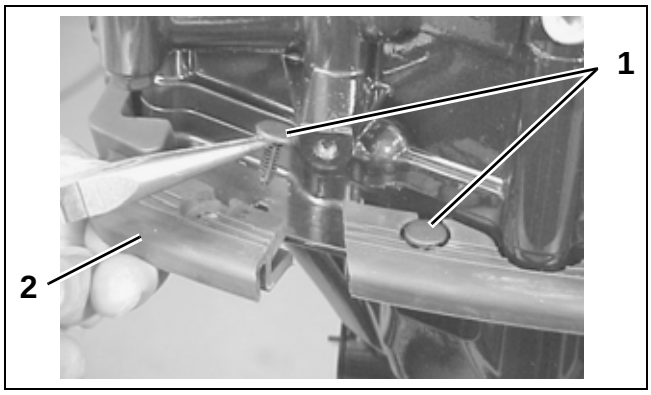

1. Pins (2) 001414
2. Side cover seal

Remove 13 bolts. Lift the powerhead from the engine holder.

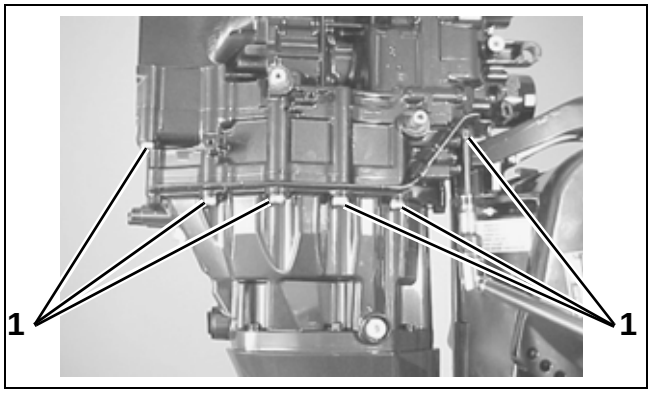

1. Bolts (6) – starboard side 001415

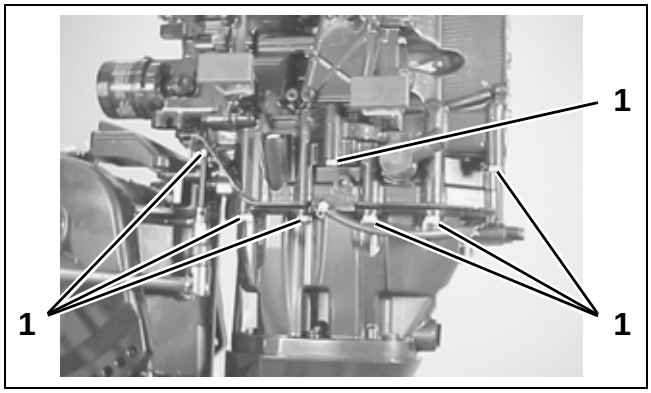

1. Bolts (7) – port side 001416

Installation

Before installing the powerhead, remove the oil pump stop from the oil pan:

- Remove the bolt.
- Use a screwdriver to drive the locking edges of the stop washer upward.
- Remove the oil pump stop, the stop washer, and the gasket from the oil pan.

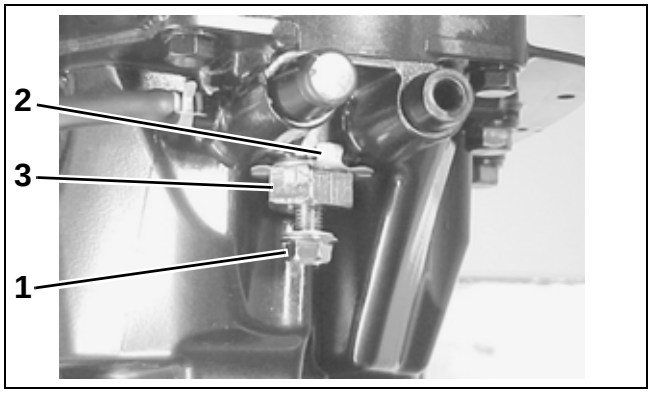

1. *Bolt* 001417
2. *Stop washer*
3. *Oil pump stop*

Install two (2) dowel pins and a **new** gasket on the engine holder mating surface.

Install a **new** O-ring around the driveshaft bore.

Apply *Moly Lube* to the driveshaft splines.

Lower the powerhead onto the engine holder.

IMPORTANT: Rotate the crankshaft to aid in aligning the driveshaft and crankshaft splines.

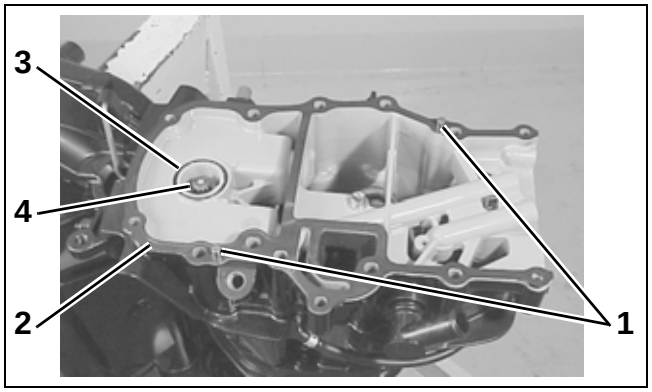

1. *Dowel pins (2)* 001418
2. *Gasket*
3. *O-ring*
4. *Driveshaft*

Apply *Gasket Sealing Compound* to the threads of the powerhead mounting bolts. Install and tighten the bolts to the following specified torques.

Powerhead Mounting Bolt Torques	
8 mm bolt	17 ft. lbs. (23 N·m)
10 mm bolt	37 ft. lbs. (50 N·m)

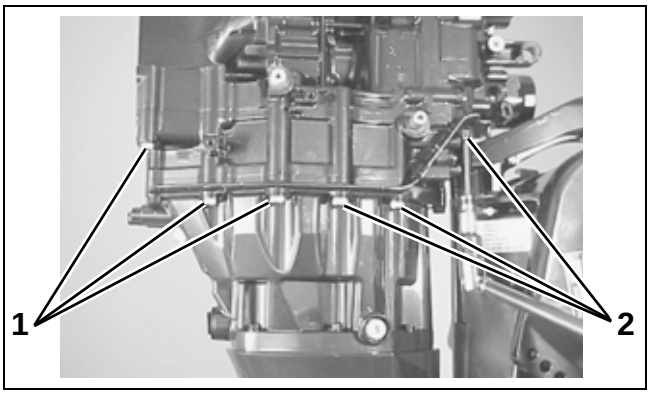

1. *Bolts (6) – starboard side* 001415

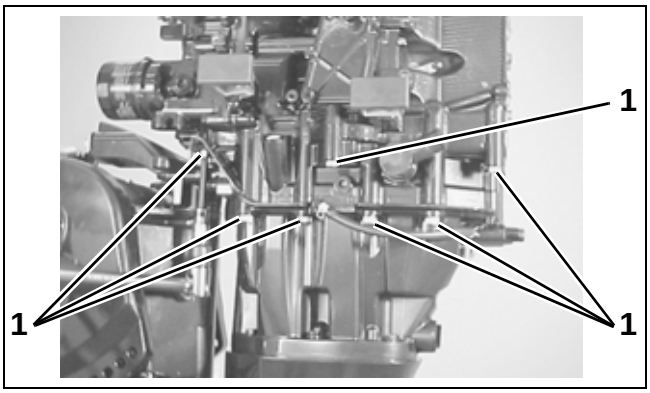

1. *Bolts (7) – port side* 001416

Install the side cover seal and two (2) pins.

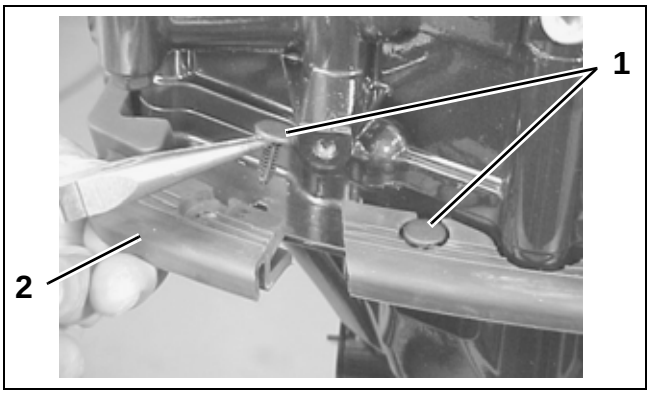

1. *Pins (2)* 001414
2. *Side cover seal*

To engage the oil pump shaft, install the oil pump stop in the oil pan:

- Install the stop washer and a **new** stop gasket on the oil pump stop.
- Screw the oil pump stop onto the oil pan (2-3 turns). DO NOT fully tighten the stop.
- To engage the oil pump shaft with the groove in the camshaft, insert and turn a screwdriver as shown.
- While holding the oil pump shaft in place with the screwdriver, tighten the oil pump stop to a torque of 37 ft. lbs. (50 N·m).
- Bend two of the stop washer tabs in opposite directions (one up and one down).

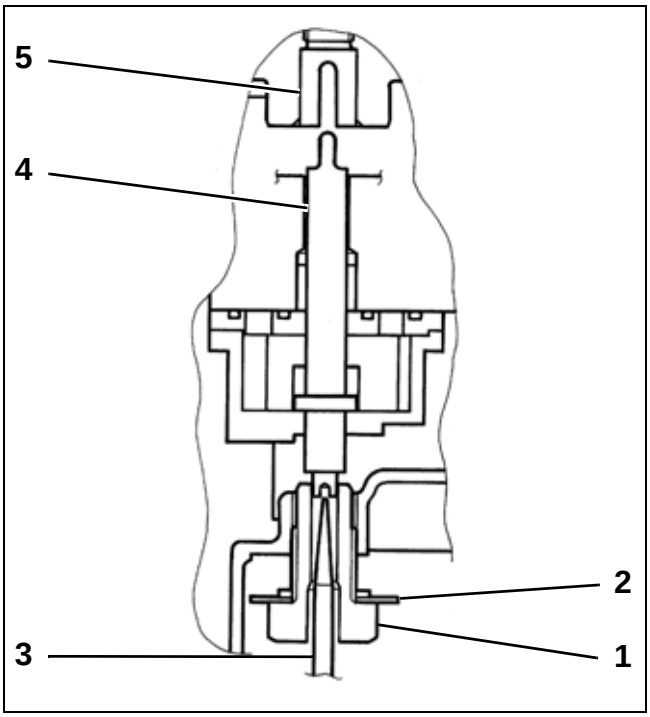

1. *Oil pump stop* 001419
2. *Stop washer*
3. *Screwdriver*
4. *Oil pump shaft*
5. *Camshaft*

- Install a **new** gasket on the bolt. Install and tighten the bolt to a torque of 17 ft. lbs. (23 N·m).

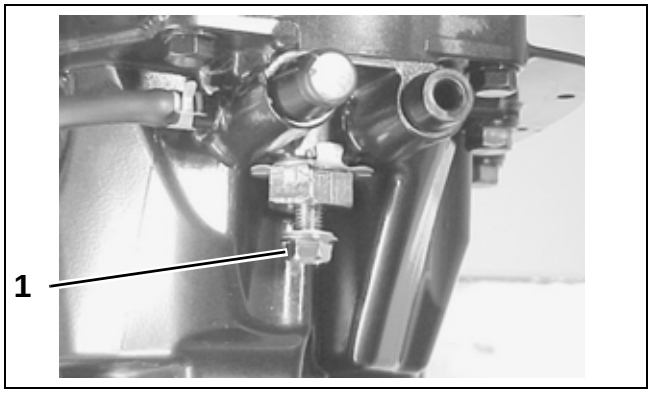

1. *Bolt* 001417

Install the front panel bracket and two (2) bolts.

Install the shift shaft arm, the shift lever and shaft, and the screw.

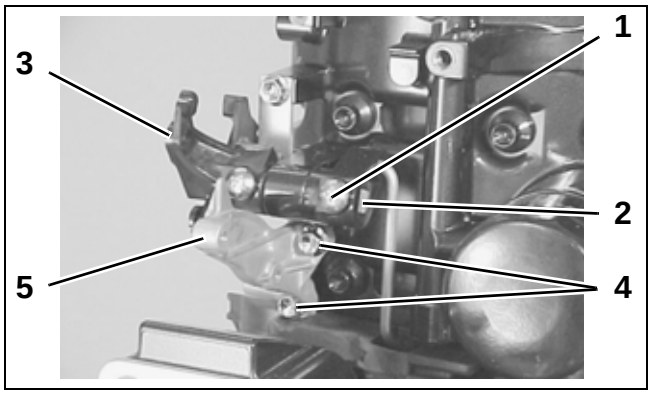

1. *Screw* 001413
2. *Shift shaft arm*
3. *Shift lever and shaft*
4. *Bolts (2)*
5. *Front panel bracket*

Connect the clutch rod to the shift rod. Tighten the locknut and the turnbuckle.

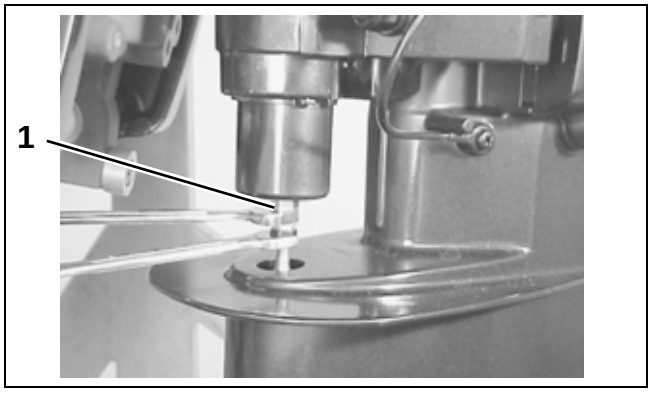

1. Locknut 001412

Install the oil level dipstick guide and the bolt.

Install the electric parts holder and two (2) bolts.

Install the power pack, then connect all engine wiring harness connectors to the power pack.

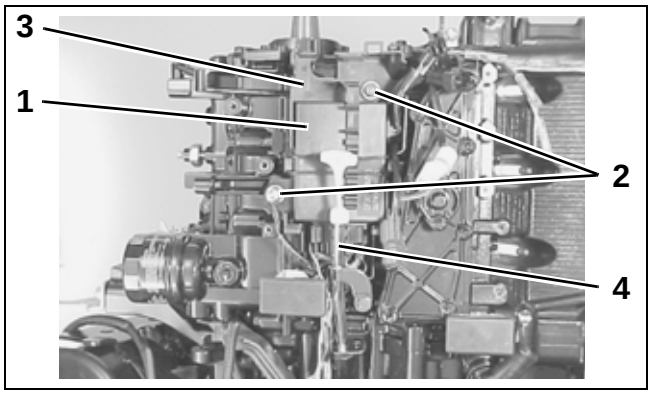

1. Power pack 001411
2. Bolts (2)
3. Electric parts holder
4. Oil level dipstick guide

Install the starter motor relay and bracket. Secure the bracket with three (3) bolts.

For models with a power trim and tilt (PTT) unit, install the PTT motor relay and bracket. Secure the bracket with the bolts.

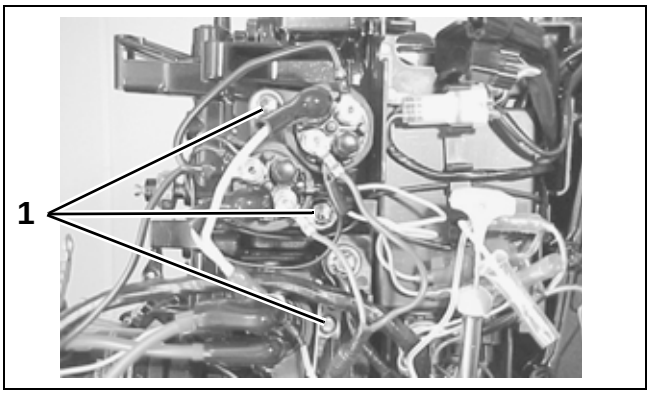

1. Bolts (3) 001410

Connect the water hose to the thermostat cover and the engine holder.

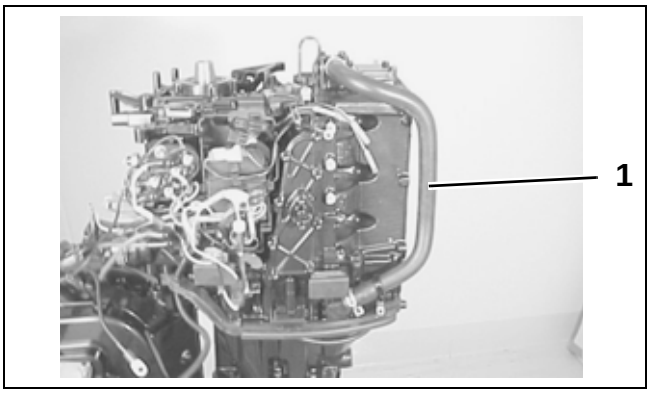

1. Water hose 001409

Install the rectifier and regulator and two (2) bolts.

Install three (3) ignition coils. Connect the primary lead wire.

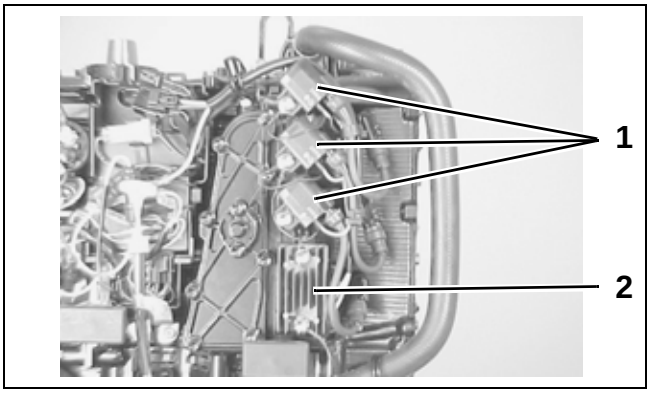

1. Ignition coils (3) 001408
2. Rectifier and regulator

Install the battery charge coil, the crankshaft position sensors, and the flywheel. Refer to the **ENGINE CONTROL** section.

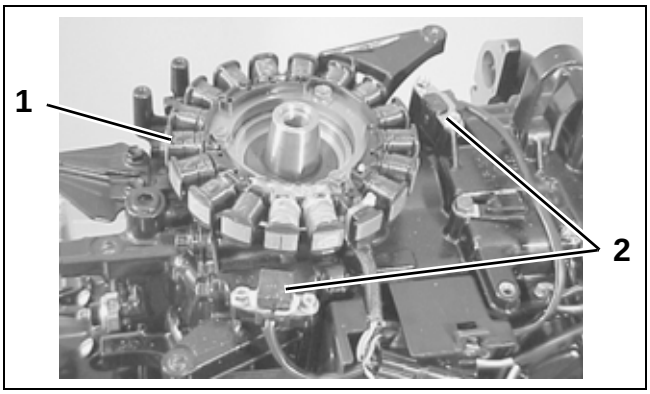

1. *Battery charge coil* 001407
2. *Crankshaft position sensors*

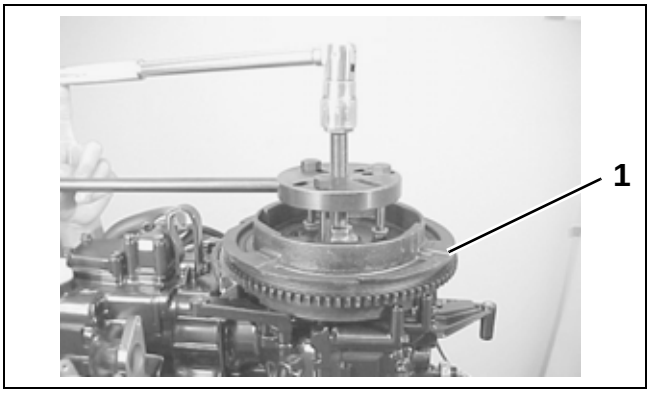

1. *Flywheel* 001406

Install the two (2) bolts that secure the front panel.

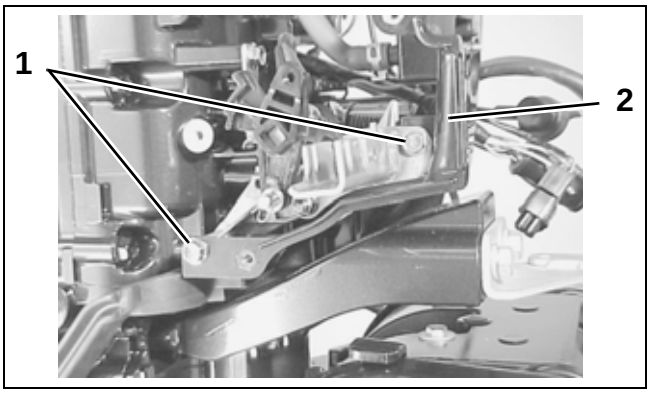

1. *Bolts (2)* 001405
2. *Front panel*

Install the inlet case and carburetor assembly. Refer to the **FUEL SYSTEM** section.

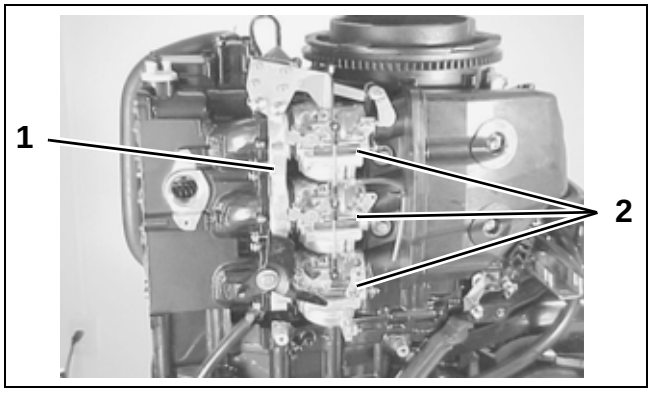

1. *Inlet case* 001402
2. *Carburetor assemblies (3)*

Install the switch bracket, the neutral switch, and the two (2) bolts. Connect the neutral switch lead wire.

Connect the oil pressure switch lead wire. Tighten the screw securely.

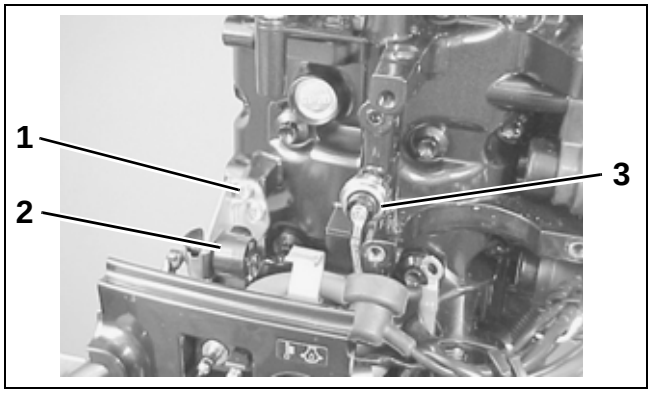

1. *Bolt* 001404
2. *Neutral switch*
3. *Oil pressure switch*

Install the starter motor. Refer to the **ELECTRICAL** section.

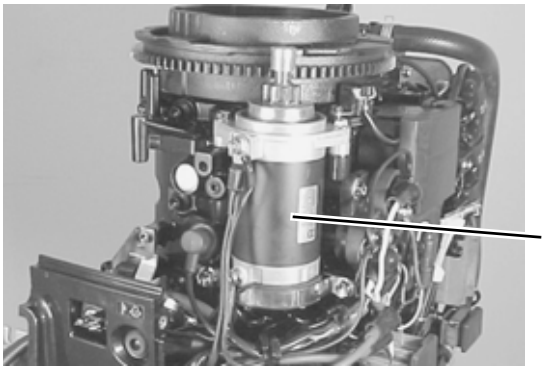

1. Starter motor 001403

REMOTE CONTROL MODELS

Connect the choke solenoid lead wire.

ALL MODELS

Install the fuel filter, the fuel filter bracket, and the bolt.

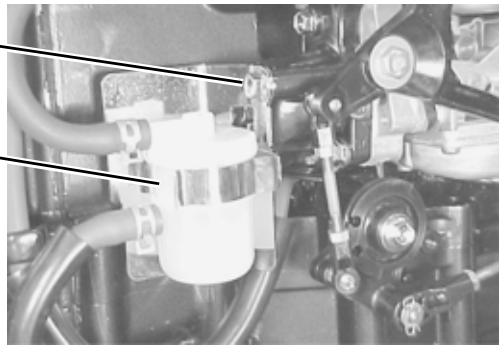

1. Fuel filter bracket bolt 001612
2. Fuel filter

Install the fuel pump. Refer to the **FUEL SYSTEM** section.

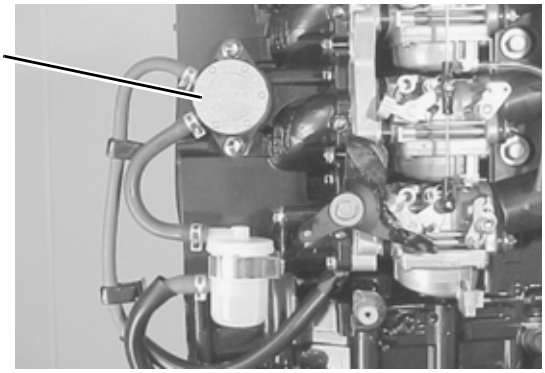

1. Fuel pump 001400

IMPORTANT: Before installing the cylinder head cover, check the valve clearance.

Apply *Three Bond No. 1207B* to the indicated areas on the cylinder head mating surface.

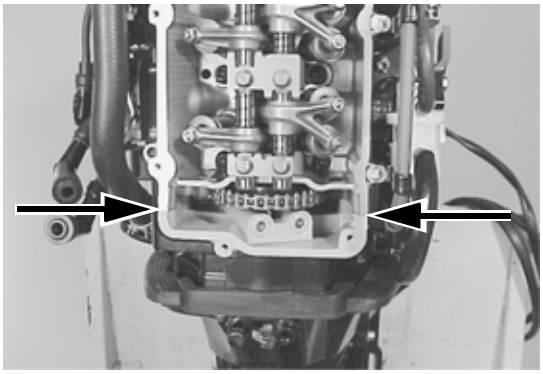

001329

IMPORTANT: The cylinder head cover gasket is reusable. Check the gasket for any wear or damage before installation.

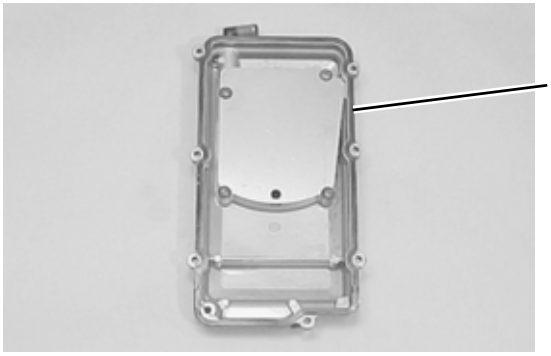

1. Cylinder head cover gasket 001420

Install the cover on the cylinder head. Install and tighten the bolts to a torque of 89 in. lbs. (10 N·m).

Connect the breather hose to the cylinder head cover.

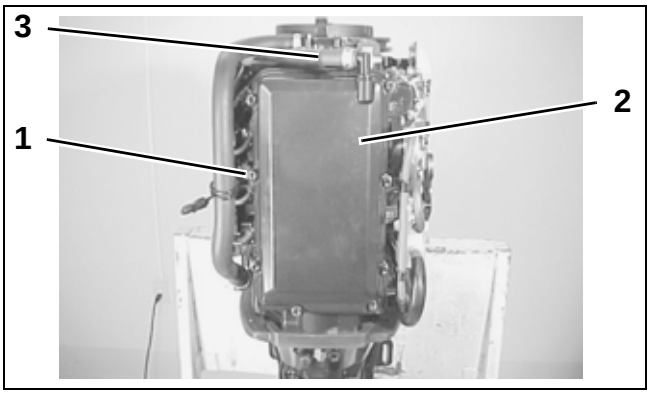

1. Bolts (8) 001395
2. Cylinder head cover
3. Breather hose

IMPORTANT: After installation, make sure that the throttle controls are adjusted correctly. Refer to the **FUEL SYSTEM** section for the adjustment procedures.

REMOTE CONTROL MODELS

Install the throttle control rod, the throttle lever, the throttle control lever, and the bolt.

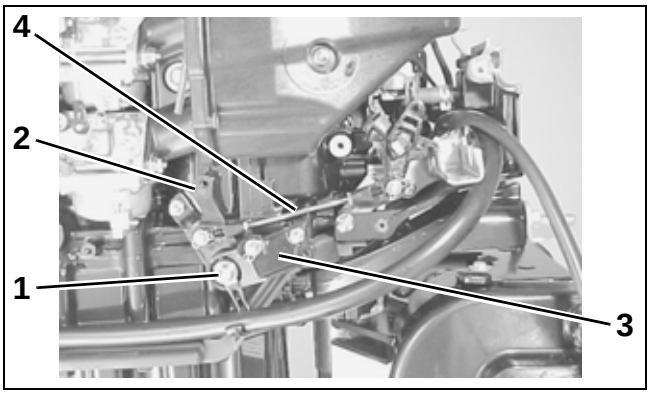

1. Bolt 001399
2. Throttle control lever
3. Throttle lever
4. Throttle control rod

Install the throttle control rod, the throttle lever rod, the throttle drum, and the bolt.

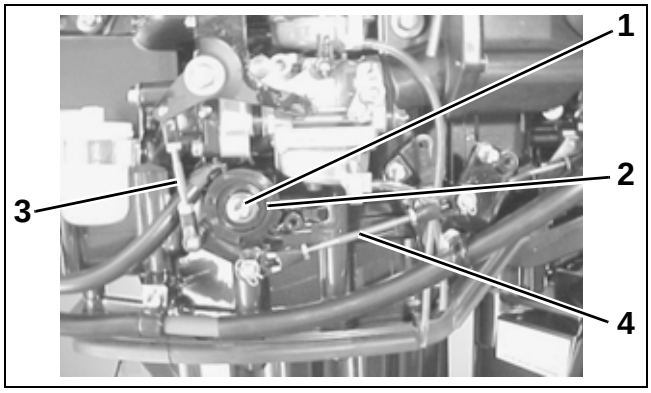

1. Bolt 001398
2. Throttle drum
3. Throttle lever rod
4. Throttle control rod

TILLER HANDLE MODELS

Install the shift lever link.

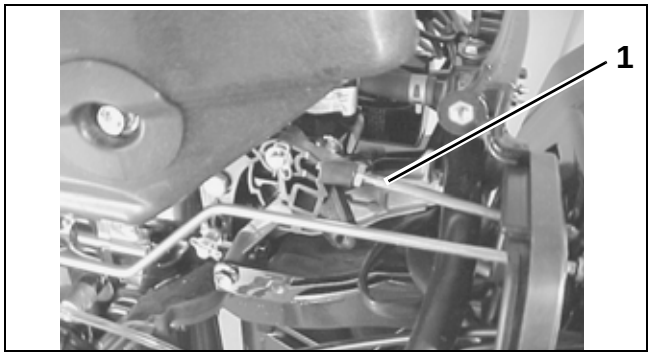

1. Shift lever link 001397

Install the throttle limiter rod, the throttle lever rod, the throttle drum, and the bolt.

Install the throttle cables to the throttle drum. Refer to the **FUEL SYSTEM** section.

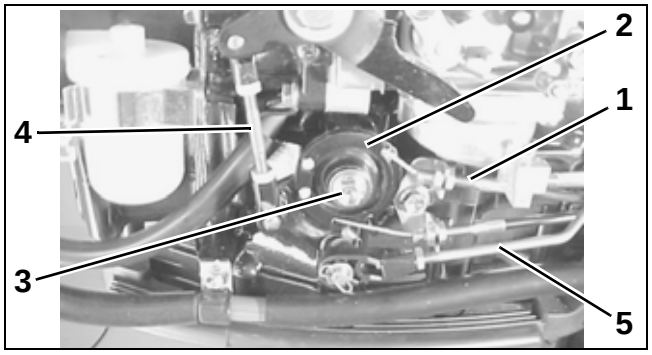

1. *Throttle cables* 001396
2. *Throttle drum*
3. *Bolt*
4. *Throttle lever rod*
5. *Throttle limiter rod*

Install the flywheel cover and three (3) bolts.

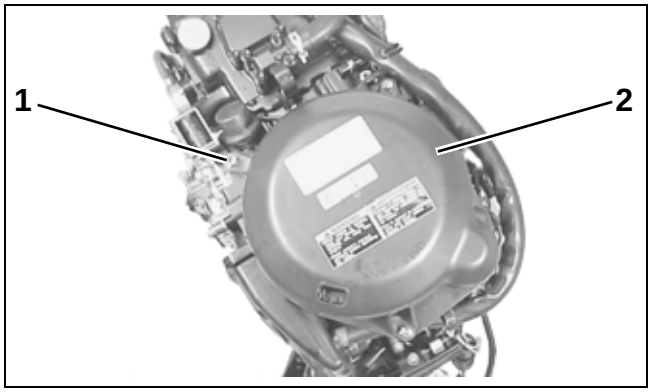

1. *Bolts (3)* 001394
2. *Flywheel cover*

Install the side covers. Refer to the **MAINTENANCE** section.

TIMING CHAIN AND TENSIONER

Removal

Remove the powerhead.

Remove two (2) bolts, the dowels, and the upper oil seal housing.

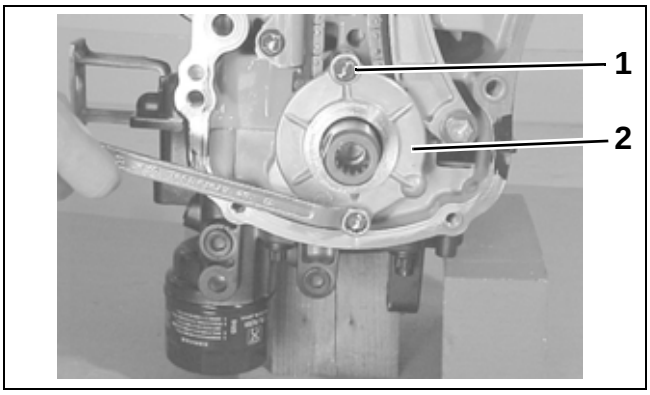

1. *Bolts (2)* 001422
2. *Upper oil seal housing*

Loosen all nine (9) valve adjusting locknuts and valve adjusting screws fully. Leave the screws in place.

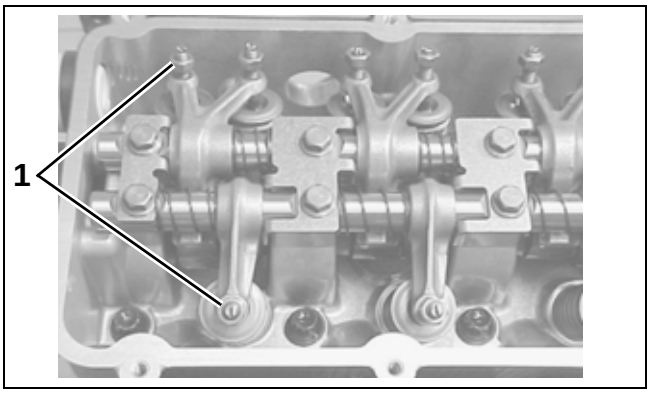

1. *Valve adjusting screws (9)* 001423

Turn the crankshaft in its normal running direction until the No.1 cylinder reaches top dead center.

The No. 1 cylinder will be at top dead center when the match mark on the crankshaft is aligned with the match mark on the crankcase.

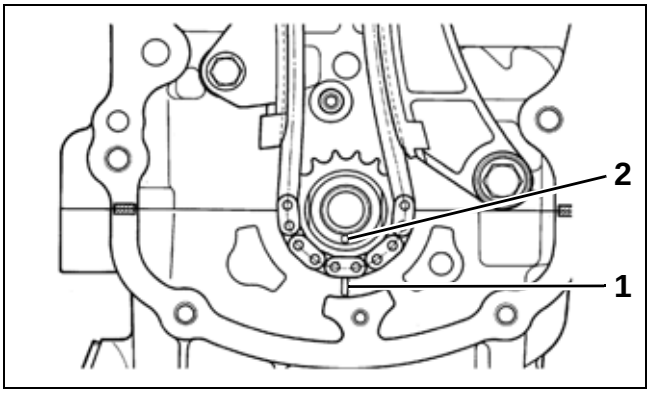

1. *Match mark on crankcase* 001424
2. *Match mark on crankshaft*

Remove two (2) bolts and the tensioner adjuster.

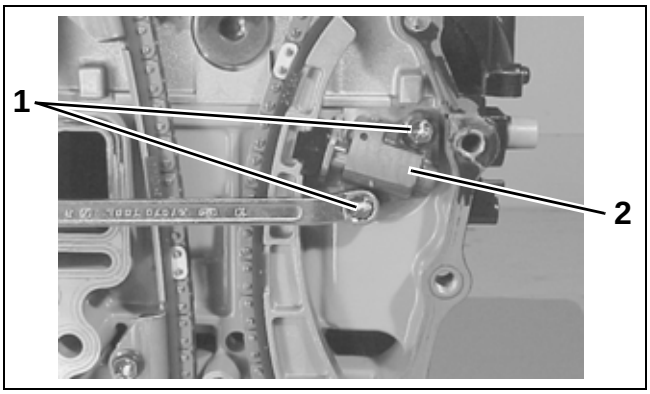

1. *Bolts (2)* 001425
2. *Tensioner adjuster*

Remove the bolt, the washer, the spacer, and the timing chain tensioner.

Remove two (2) bolts and the timing chain guide.

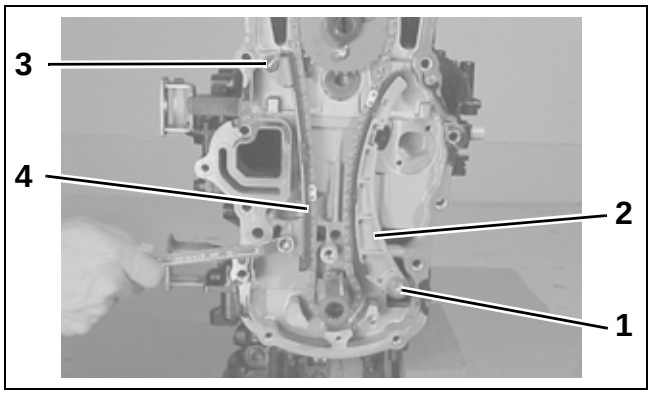

1. *Bolt* 001426
2. *Timing chain tensioner*
3. *Bolts (2)*
4. *Timing chain guide*

Remove three (3) bolts that secure the timing sprocket to the camshaft. Remove the timing sprocket, the dowel pin, and the timing chain.

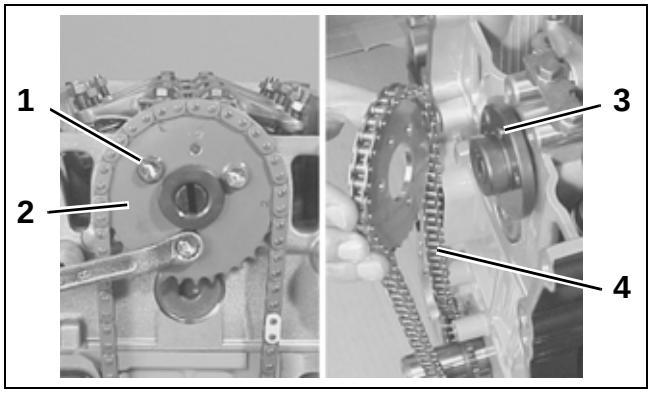

1. *Bolts (3)* 001427
2. *Timing sprocket*
3. *Dowel pin*
4. *Timing chain*

Inspection

Inspect the timing chain, the tensioner, the guide, and the sprockets for wear and damage.

Inspect the plunger and the latch of the tensioner adjuster for smooth operation.

Check the oil passage with a syringe filler with isopropyl alcohol.

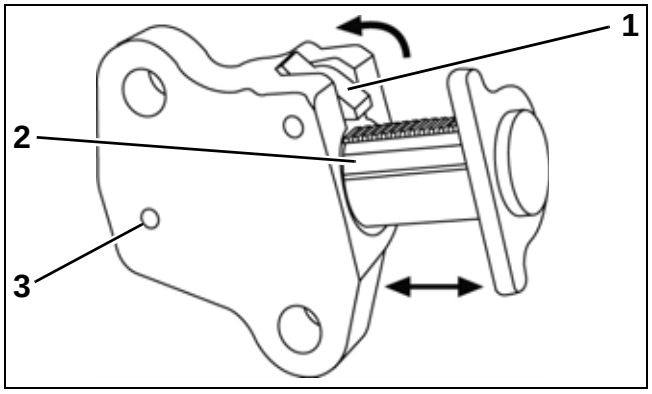

1. Latch 001429
2. Plunger
3. Oil passage

Check the upper oil seal for wear or damage. Replace the oil seal if necessary.

IMPORTANT: The oil seal lip must face toward the sprocket when the housing is installed.

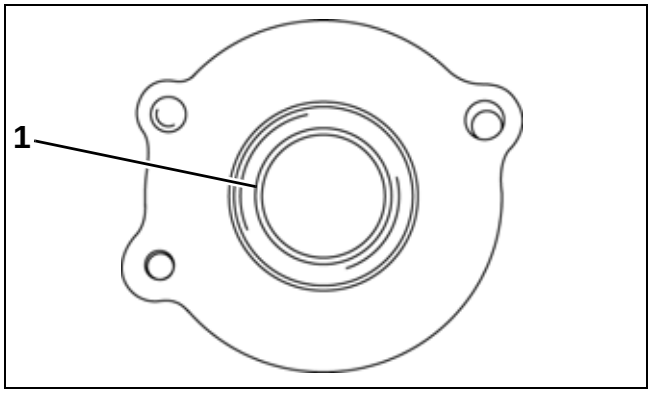

1. Upper oil seal 001432

Installation

Align the crankshaft timing mark with the crankcase timing mark by turning crankshaft.

Install the dowel pin into the camshaft. Make sure that the dowel pin is at the top.

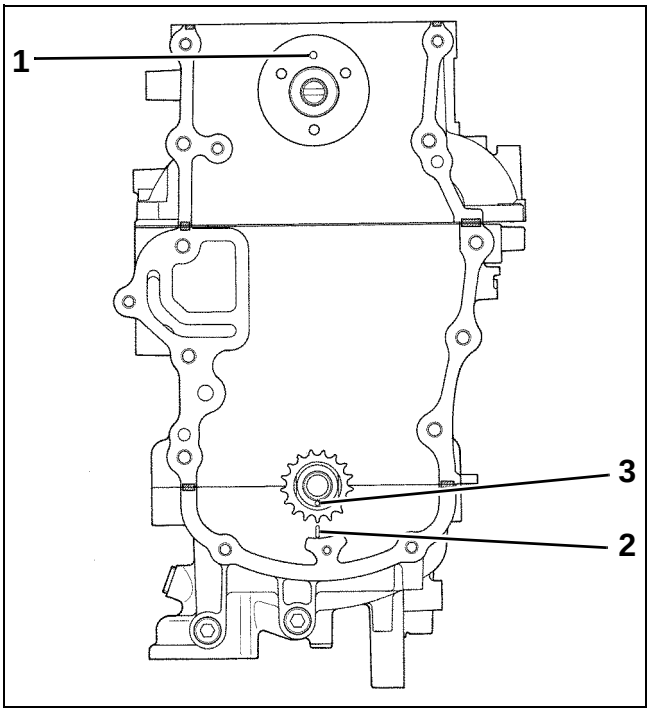

1. Dowel pin 001433
2. Crankcase timing mark
3. Crankshaft timing mark

Install the timing chain on the crankshaft. Make sure that one of the yellow plates of the timing chain is aligned with the crankshaft timing mark.

Install the timing chain on the timing sprocket. Make sure that the other yellow plate of the timing chain is aligned with the arrow mark on the timing sprocket. Install the timing sprocket onto the camshaft as shown.

Apply *Nut Lock* to the threads of three (3) timing sprocket bolts. Install and tighten the bolts to a torque of 97 in. lbs. (11 N·m).

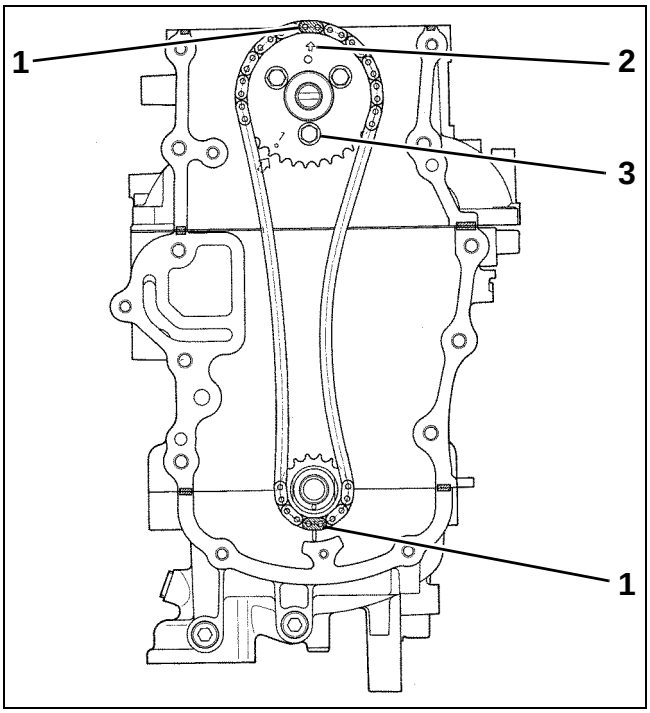

1. *Yellow plates on timing chain* 001434
2. *Arrow mark on timing sprocket*
3. *Bolts (3)*

Install the timing chain guide. Install and tighten two (2) bolts securely.

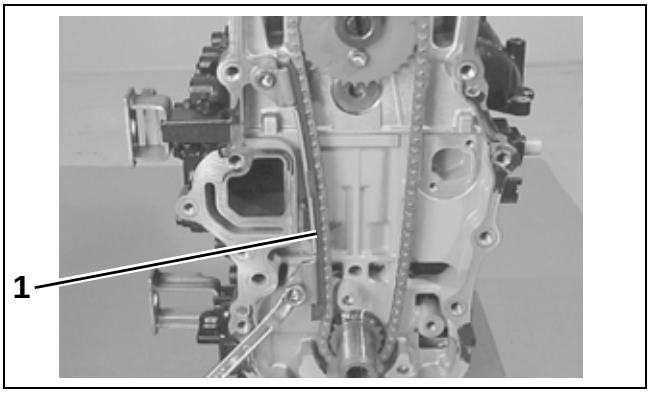

1. *Timing chain guide* 001435

Insert the spacer, the washer, and the bolt into the timing chain tensioner. Install the tensioner and tighten the bolt securely.

After installation, apply oil to the timing chain and the tensioner.

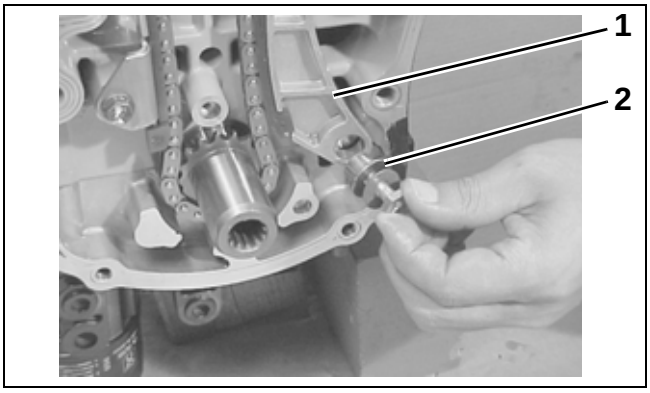

1. *Timing chain tensioner* 001436
2. *Spacer, washer and bolt*

With the latch of the tensioner adjuster returned and the plunger pushed into the body, insert the stopper into the latch and the body. Make sure that the plunger will not come out.

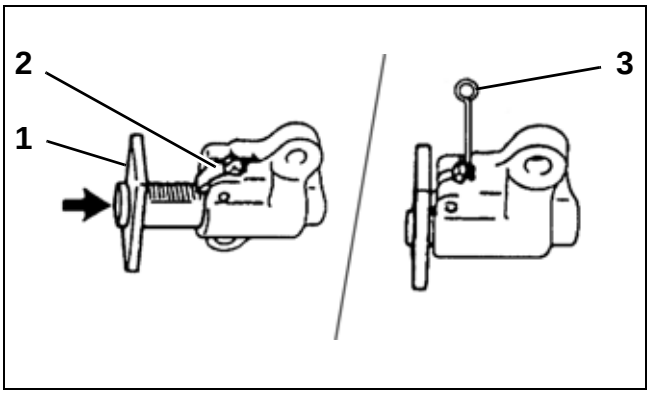

1. *Plunger* 001437
2. *Latch*
3. *Stopper*

Install the timing chain tensioner adjuster.

Apply *Nut Lock* to the threads of two (2) bolts. Install and tighten the bolts to a torque of 97 in. lbs. (11 N·m).

Pull the stopper out of the tension adjuster.

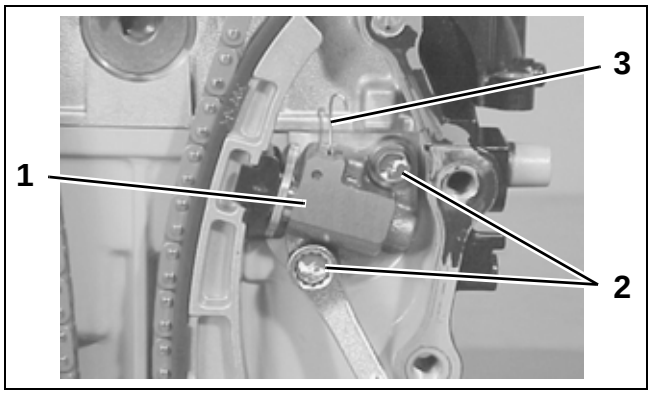

1. Timing chain tensioner adjuster 001438
2. Bolts (2)
3. Stopper

Turn the crankshaft two (2) revolutions in its normal running direction. Make sure that the match marks on the crankcase and the crankshaft are aligned. Also check that the arrow on the cylinder head is aligned with the 1 on the timing sprocket as shown. This indicates that the No. 1 cylinder piston is at top dead center (TDC) on the compression stroke.

To bring each piston to TDC on the compression stroke, align each corresponding number on the timing sprocket with the arrow on the cylinder head.

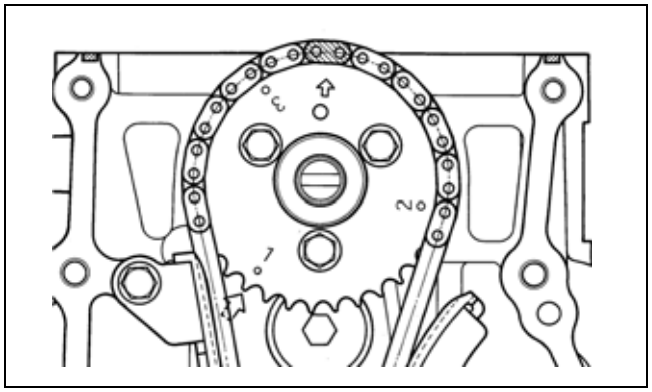

001440

Adjust the valve clearance.

Apply oil to the lip of the upper oil seal.

Install two (2) dowel pins and the upper oil seal housing. Install and tighten the bolts securely.

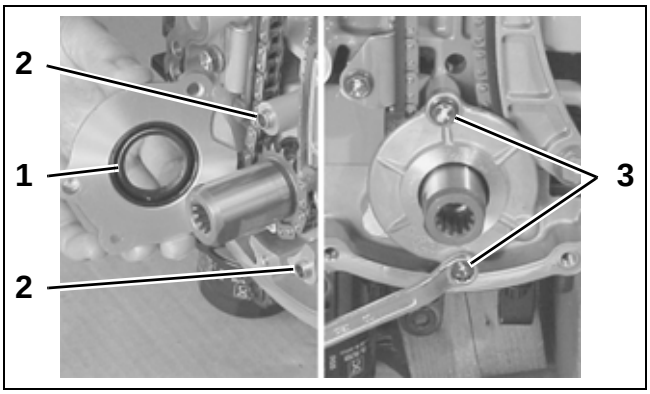

1. Oil seal 001441
2. Dowel pins (2)
3. Bolts (2)

Apply *Triple Bond No. 1207B* to six (6) locations on the engine holder mating surface. Then install the powerhead.

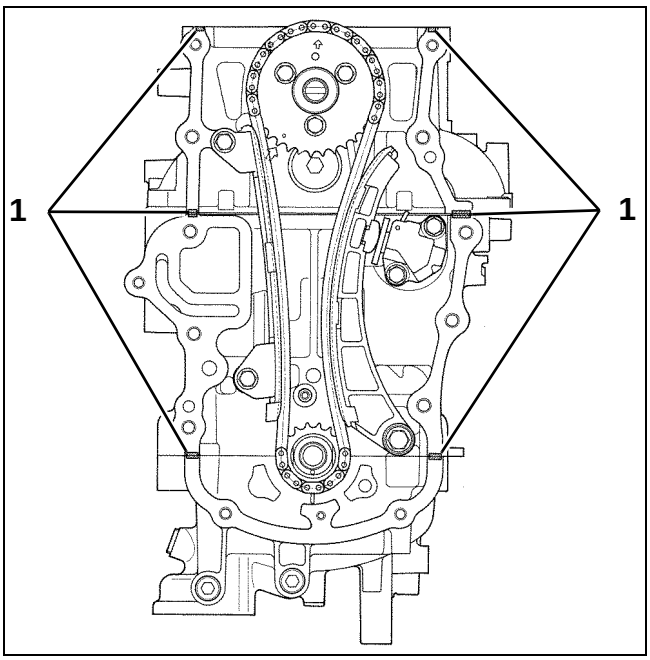

1. Sealant locations 001439

CYLINDER HEAD

Removal

Remove the powerhead.

Remove the timing chain.

Use a 10 mm deep socket wrench to loosen twelve (12) cylinder head bolts in the order indicated below. Then remove the bolts.

Remove the cylinder head and the cylinder head gasket.

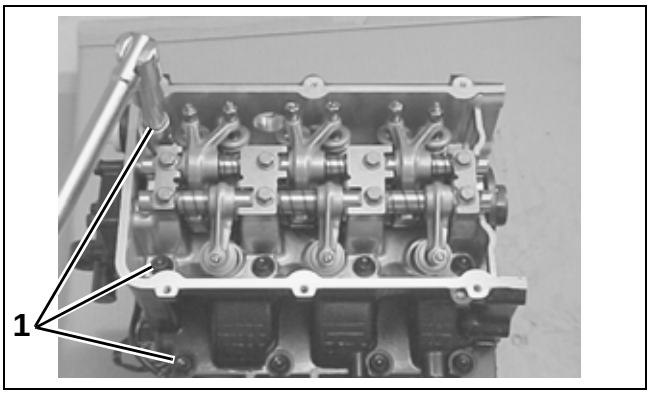

1. Cylinder head bolts (12) 001457

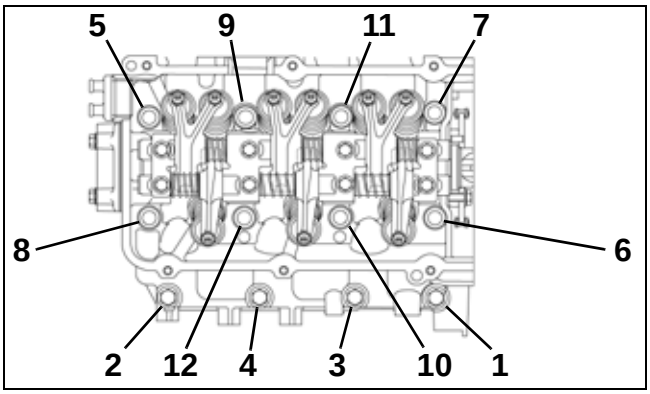

Bolt Loosening Sequence 001458

Installation

Insert two (2) dowel pins. Install a **new** cylinder head gasket on the cylinder head.

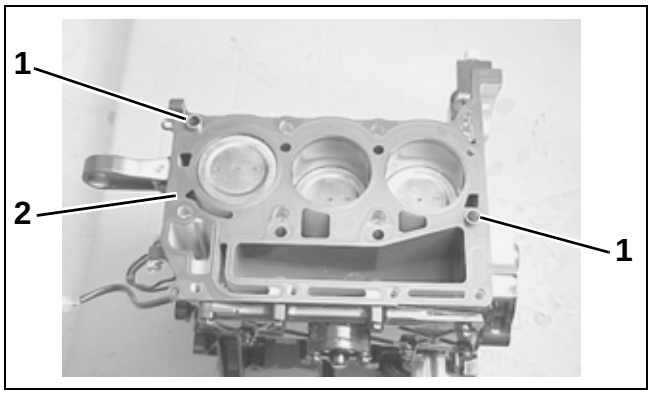

1. Dowel pins (2) 001459
2. Cylinder head gasket

Make sure that the No. 1 cylinder piston is at top dead center. Turn the camshaft to locate the dowel pin at the top as shown.

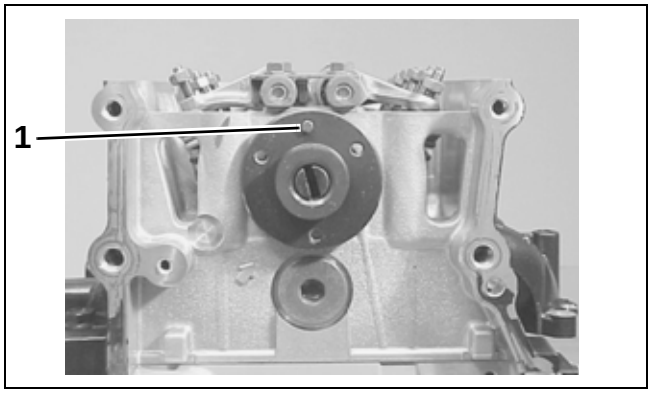

1. Camshaft dowel pin 001460

Position the cylinder head on the engine holder.

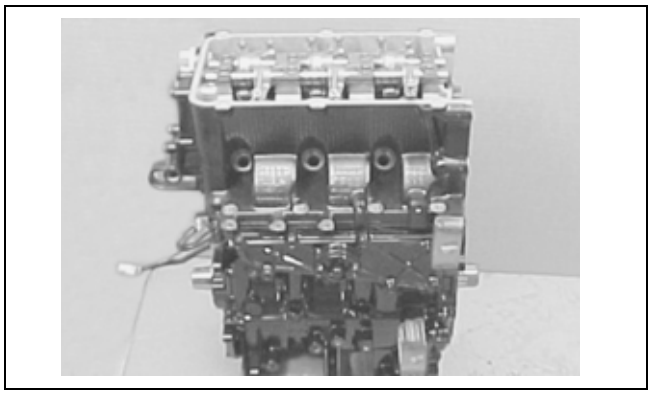

001461

Apply engine oil to the cylinder head bolts and place them in the bolt holes. Then tighten the bolts in the following manner:

- **STEP 1** – Tighten the bolts to the initial torque according to the tightening sequence. Then completely loosen the bolts in reverse order.
- **STEP 2** – Tighten the bolts again to the initial torque according to the tightening sequence.
- **STEP 3** – Finally, tighten the bolts to the final torque according to the tightening sequence.

Cylinder Head Bolt Torques		
Bolt size	**Initial**	**Final**
8 mm	9 ft. lbs. (12 N·m)	18 ft. lbs. (25 N·m)
10 mm	22 ft. lbs. (30 N·m)	45 ft. lbs. (61 N·m)

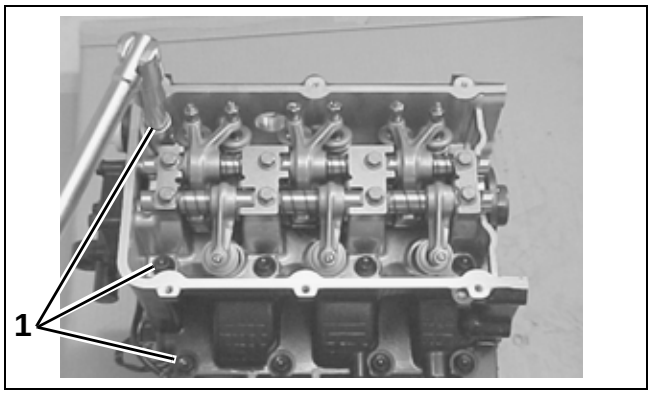

1. Cylinder head bolts (12) 001457

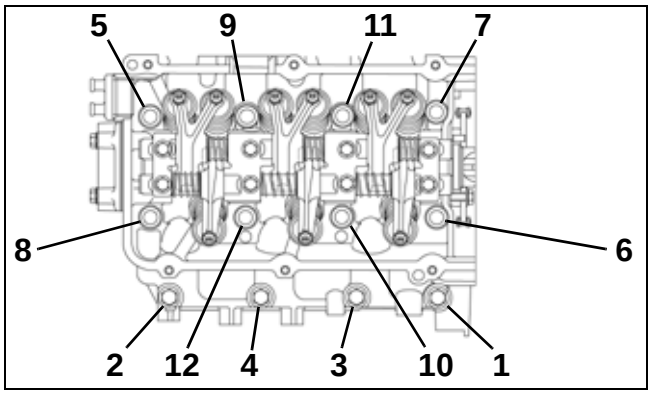

Bolt Tightening Sequence 001458

Install the timing chain. Refer to “TIMING CHAIN AND TENSIONER” on page 131.

Check the valve clearance of each valve. Refer to the **MAINTENANCE** section.

Disassembly

Remove the cylinder head.

Remove four (4) bolts and the upper cylinder head cover.

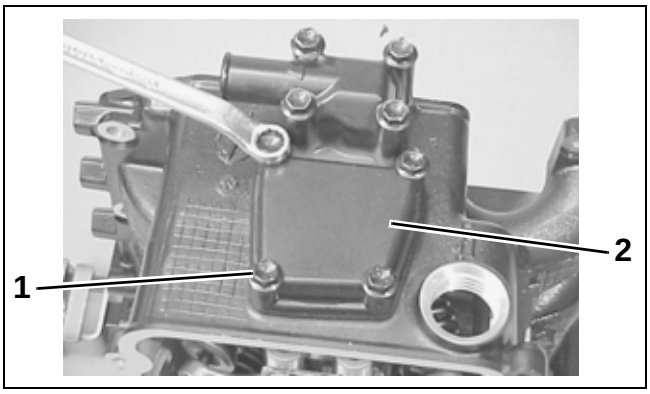

1. Bolts (4) 001462
2. Upper cylinder head cover

Remove eight (8) bolts and the rocker arm shaft brackets.

Remove the intake rocker arm shaft and the exhaust rocker arm shaft. Remove all rocker arms and springs.

IMPORTANT: Mark the location of each rocker arm within the cylinder head. Each rocker arm and its components must be installed in their original locations during assembly.

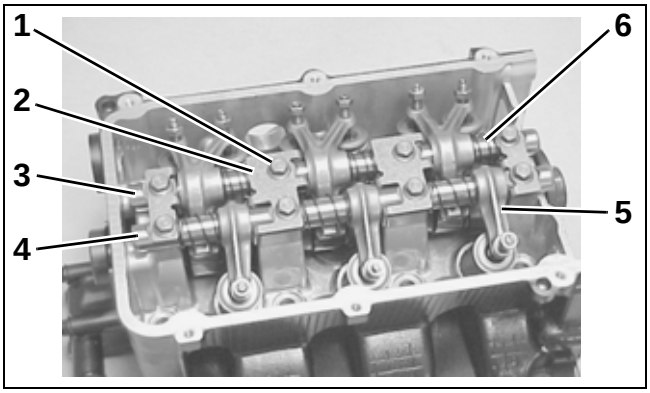

1. Bolts (8) 001463
2. Rocker arm shaft brackets (4)
3. Intake rocker arm shaft
4. Exhaust rocker arm shaft
5. Rocker arms (6)
6. Springs (6)

Remove two (2) screws and the camshaft thrust plate.

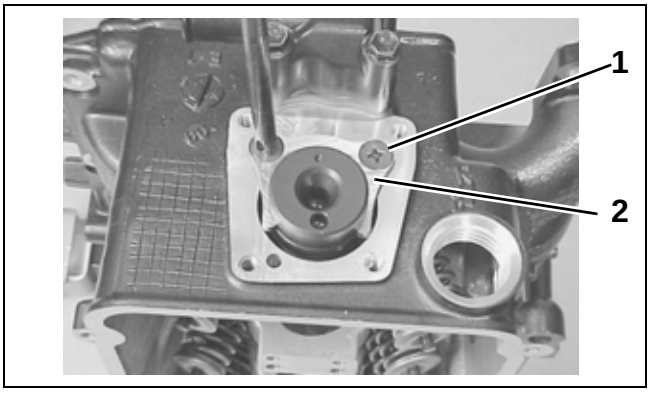

1. *Screws (2)*
2. *Camshaft thrust plate*

001465

Remove the camshaft by pulling it out toward the timing sprocket side.

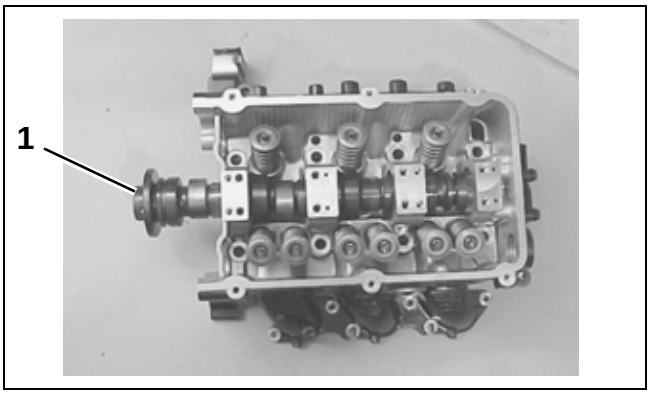

1. *Camshaft*

001466

Use a Valve Lifter, P/N 346186, and Attachment, P/N 5000899, to compress the valve springs.

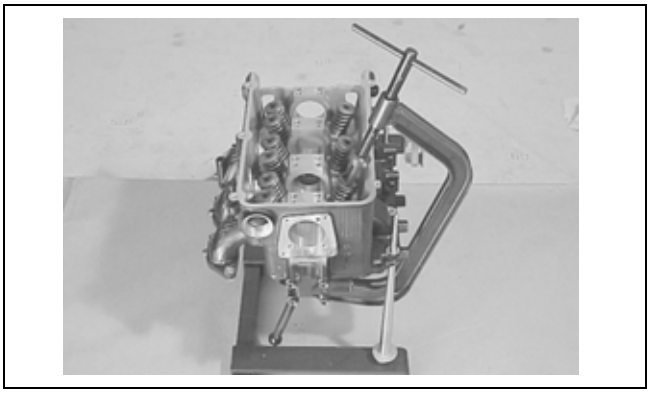

001467

Use tweezers to remove the valve cotters while the valve springs are compressed.

Remove the valve spring retainer, the valve spring, and the valve.

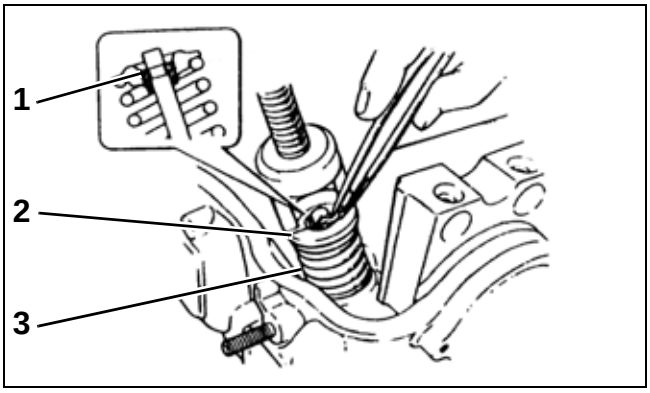

1. *Cotters*
2. *Valve spring retainer*
3. *Valve spring*

001468

Use a screwdriver to remove valve stem seal and the valve spring seat from the cylinder head.

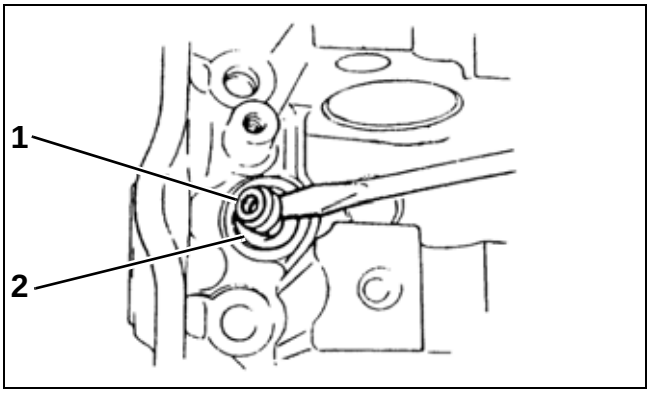

1. *Valve stem seal*
2. *Valve spring seat*

001470

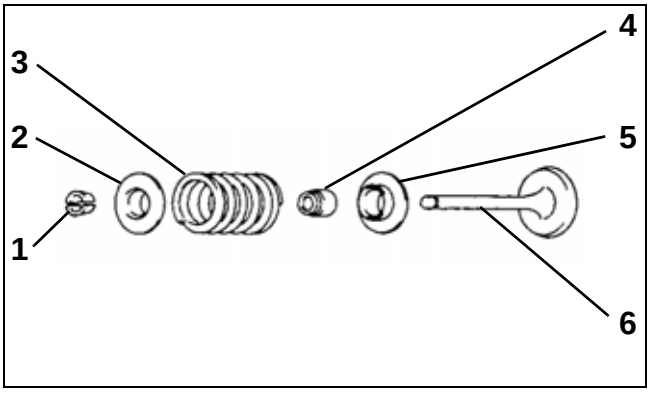

1. *Cotters*
2. *Valve spring retainer*
3. *Vale spring*
4. *Valve stem seal*
5. *Valve spring seat*
6. *Valve*

001469

Inspection and Servicing

Cylinder Head

Remove all carbon deposits from the combustion chambers. DO NOT use any sharp edged tool to scrape off carbon. Be careful not to scuff or nick the metal surfaces.

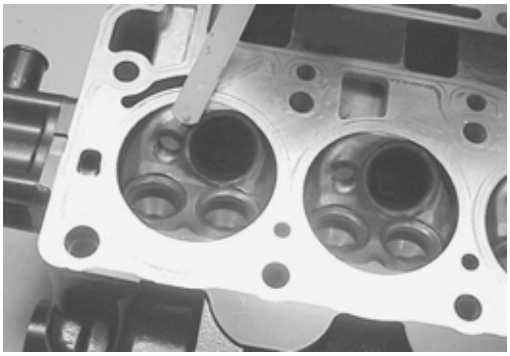

001471

Check for cracks in the intake and exhaust ports, the valve seats, the combustion chambers, and the surface of the cylinder head.

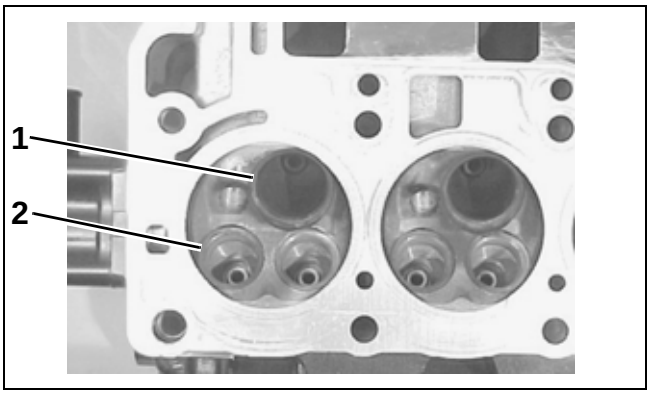

1. Exhaust valve seat 001473
2. Intake valve seat

Use a straightedge and a thickness gauge to measure the cylinder head distortion on the gasket surface at six (6) locations as shown.

The service limit for distortion is 0.002 in. (0.05 mm). If any measurement exceeds this specification, resurface or replace the cylinder head.

The cylinder head can be resurfaced using a surface plate and #400 grit wet sandpaper. Move the cylinder head in a figure eight pattern when sanding.

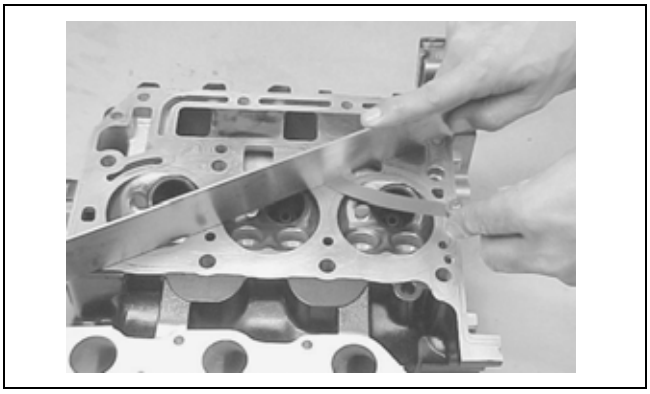

001474

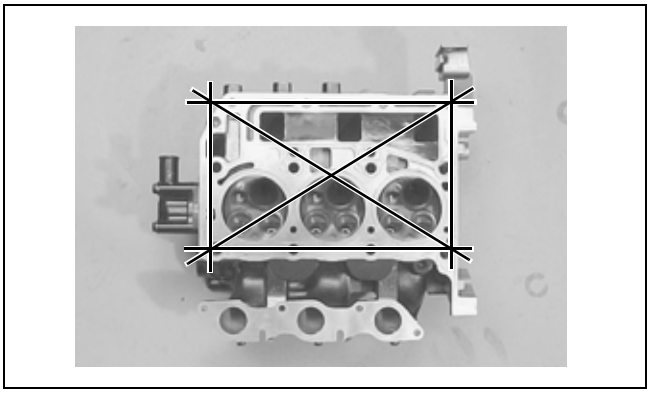

001473

Check the water jackets for clogs or obstructions.

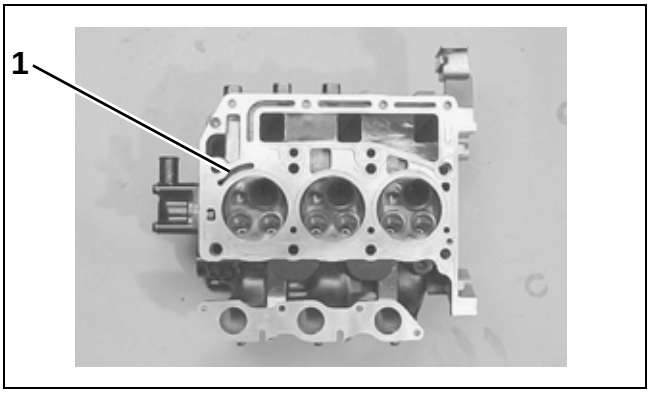

1. Water jacket 001473

Camshaft

Inspect the cam face, the camshaft journals, and the journal bores for pitting, scratches, wear, or damage. If any such conditions are found, replace the camshaft and/or the cylinder head.

Use a micrometer to measure the cam height. If the measurement exceeds the specification, replace the camshaft.

Cam Height Specifications			
Model		**Standard**	**Service Limit**
30	IN	1.4203 – 1.4266 in. (36.076 – 36.236 mm)	1.4164 in. (35.976 mm)
	EX	1.3886 – 1.3949 in. (35.271 – 35.431 mm)	1.3847 in. (35.171 mm)

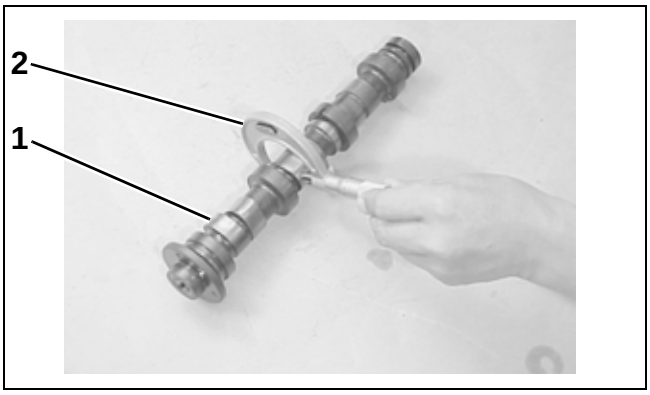

1. Cam 001475
2. Micrometer

IMPORTANT: 30 HP model camshafts have a dent.

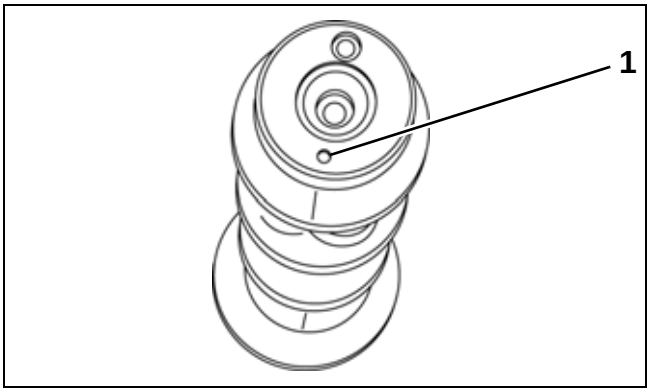

1. Dent on camshaft (DF30 models only) 001476

Use a set of “V” blocks to support the camshaft on a surface plate. Use a dial gauge to measure the camshaft runout.

The service limit for camshaft runout is 0.004 in. (0.10 mm). If the measurement exceeds this specification, replace the camshaft.

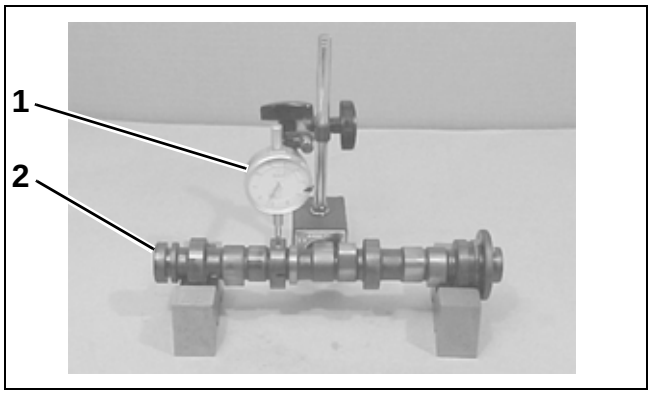

1. Dial gauge 001477
2. Camshaft

Use a micrometer to measure the outside diameters of the journals in two directions at four places.

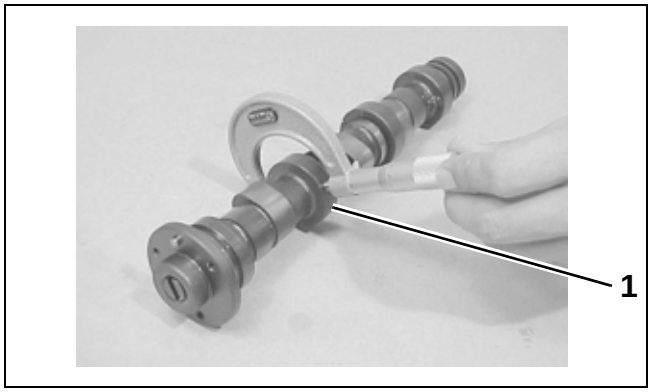

1. Camshaft journal 001479

Use a bore gauge to measure the inside diameters of the journal bores in the cylinder head.

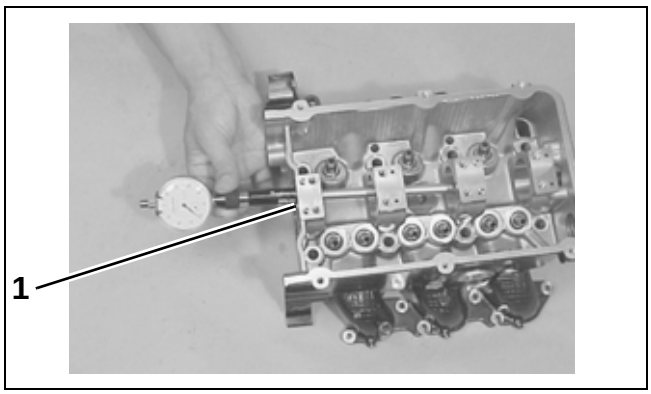

1. Camshaft journal bore 001480

IMPORTANT: The journal are numbered are in order from the flywheel magnet to the bottom of the cylinder.

Camshaft Journal Outside Diameter		
Journal No.	**Standard**	**Service Limit**
Top	1.7096 – 1.7106 in. (43.425 – 43.450 mm)	1.7077 in. (43.375 mm)
2nd	1.7175 – 1.7185 in. (43.625 – 43.650 mm)	1.7156 in. (43.575 mm)
3rd	1.7254 – 1.7264 in. (43.825 – 43.850 mm)	1.7234 in. (43.775 mm)
4th	1.7333 – 1.7343 in. (44.025 – 44.050 mm)	1.7313 in. (43.975 mm)

Camshaft Journal Bore Inside Diameter		
Journal No.	**Standard**	**Service Limit**
Top	1.7126 – 1.7136 in. (43.500 – 43.525 mm)	1.7139 in. (43.534 mm)
2nd	1.7205 – 1.7215 in. (43.700 – 43.725 mm)	1.7218 in. (43.734 mm)
3rd	1.7283 – 1.7293 in. (43.900 – 43.925 mm)	1.7300 in. (43.934 mm)
4th	1.7362 – 1.7372 in. (44.100 – 44.125 mm)	1.7376 in. (44.134 mm)

Subtract the camshaft journal outside diameter measurement from the camshaft journal bore inside diameter measurement to determine the journal oil clearance.

If the camshaft journal oil clearance exceeds the service limit, replace the camshaft and/or the cylinder head.

Camshaft Journal Oil Clearance	
Standard	0.002 – 0.004 in. (0.05 – 0.10 mm)
Service Limit	0.006 in. (0.16 mm)

Rocker Arm and Shaft

Inspect each rocker arm. If the tip of the adjusting screw is excessively worn, replace the screw. If the cam riding face is excessively worn, replace the rocker arm.

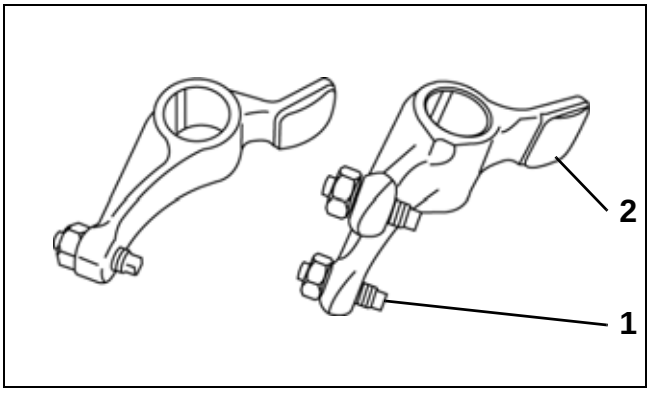

1. Adjusting screw
2. Cam riding face
001481

Use a set of “V” blocks to support the rocker arm shaft on a surface plate. Use a dial gauge to measure the shaft runout.

The service limit for rocker arm shaft runout is 0.005 in. (0.12 mm). If the measurement exceeds this specification, replace the shaft.

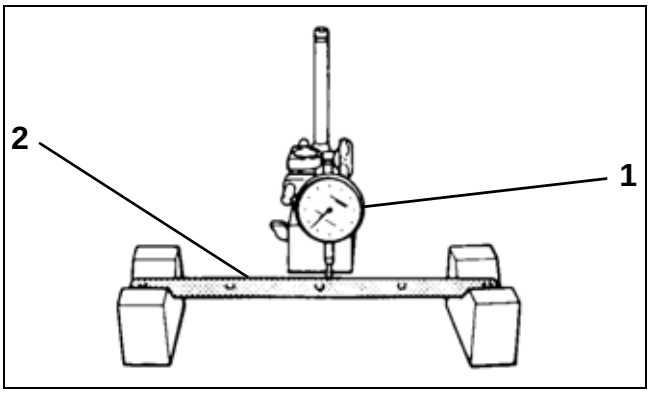

1. Dial gauge
2. Rocker arm shaft
001482

Use a micrometer and a bore gauge to measure the rocker arm shaft outside diameter and the rocker arm bore inside diameter.

Rocker Arm and Shaft Specifications	
Rocker Arm Shaft Outside Diameter	0.6289 – 0.6294 in. (15.973 – 15.988 mm)
Rocker Arm Bore Inside Diameter	0.6299 – 0.6306 in. (16.000 – 16.018 mm)

Subtract the rocker arm shaft outside diameter from the rocker arm bore inside diameter to determine the rocker arm-to-shaft clearance.

If the measurement exceeds the service limit, replace the rocker arm and/or the shaft.

Rocker Arm-to-Shaft Clearance	
Standard	0.0005 – 0.0018 in. (0.012 – 0.045 mm)
Service Limit	0.0035 in. (0.090 mm)

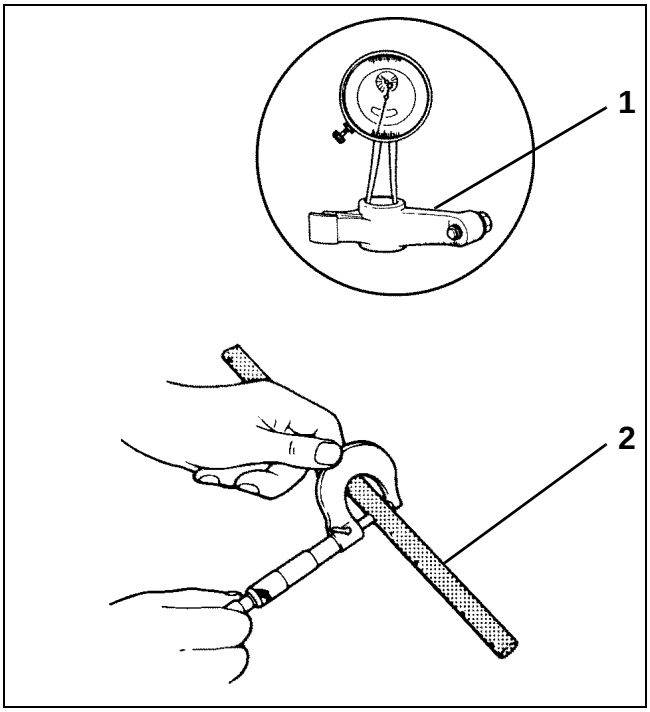

1. Rocker arm
2. Rocker arm shaft

001483

Valve Stem and Valve Guide

Use a micrometer to measure the outside diameter of the valve stems. Be sure to take readings at more than one place along the length of each valve stem.

Valve Stem Outside Diameter	
Intake valve	0.2152 – 0.2157 in. (5.465 – 5.480 mm)
Exhaust valve	0.2146 – 0.2152 in. (5.450 – 5.465 mm)

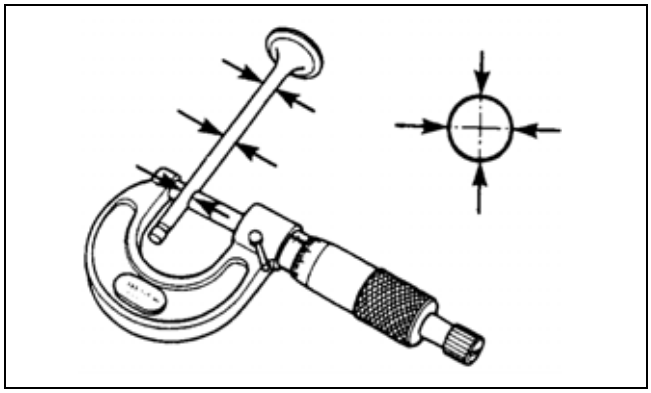

001491

Use a bore gauge to measure the inside diameter of the valve guides. Be sure to take readings at more than one place along the length of each valve guide.

Valve Guide Inside Diameter	
Intake valve	0.2165 – 0.2170 in. (5.500 – 5.512 mm)
Exhaust valve	0.2165 – 0.2170 in. (5.500 – 5.512 mm)

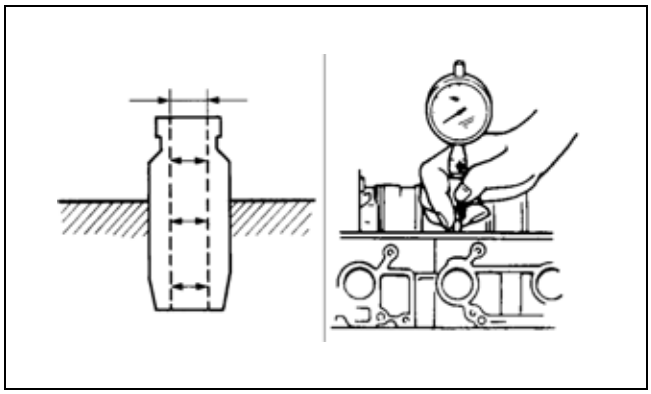

001492

Subtract the valve stem outside diameter from the valve guide inside diameter to determine the valve guide-to-stem clearance.

If the measurement exceeds the service limit, replace the valve guide and/or the valve.

Valve Guide-to-Stem Clearance		
Standard	IN	0.0008 – 0.0019 in. (0.020 – 0.047 mm)
	EX	0.0014 – 0.0024 in. (0.035 – 0.062 mm)
Service Limit	IN	0.0028 in. (0.070 mm)
	EX	0.0035 in. (0.090 mm)

If the valve guide inside diameter cannot be measured, use a dial gauge to check the valve stem end deflection to determine whether the valve guide-to-stem clearance is adequate.

- Install the valve into the valve guide.
- Position the valve head approximately 0.2 in. (5.0 mm) away from the valve seat.
- Move the stem end back and forth and measure the deflection.

If the measurement exceeds the service limit, replace the valve. If the measurement still exceeds the service limit with a new valve installed, replace the valve guide.

Valve Stem End Deflection		
Service Limit	IN	0.006 in. (0.14 mm)
	EX	0.007 in. (0.18 mm)

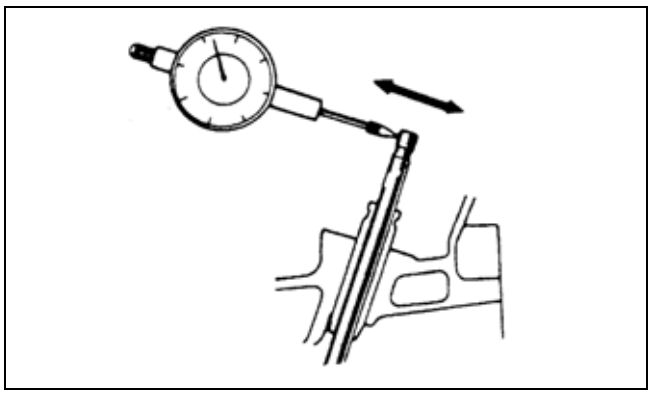

001493

Inspect the valve stem end face for pitting and wear. The valve stem end may be refaced. Be careful not to wear down the chamfer too far.

Use vernier calipers to measure the valve stem end length. If the measurement is less than the specification, the chamfer is too worn. Replace the valve.

Valve Stem End Length		
Service Limit	IN	0.276 in. (7.00 mm)
	EX	0.236 in. (6.00 mm)

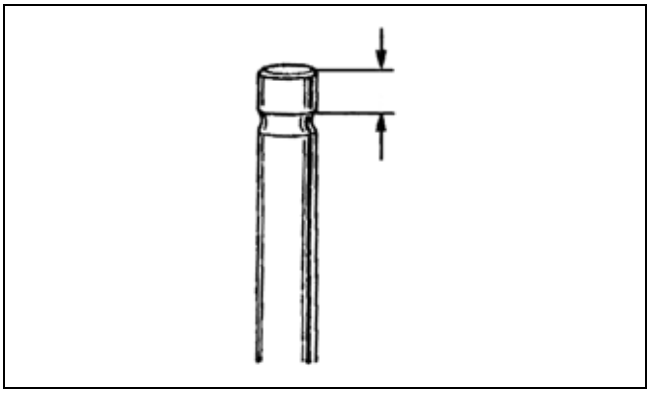

001494

Valve Guide Replacement

Use a valve guide remover to drive out the valve guide from the combustion chamber side of the cylinder head toward the valve spring side.

IMPORTANT: Do not reuse a valve guide once it has been removed. Always use a **new** oversize valve guide when assembling.

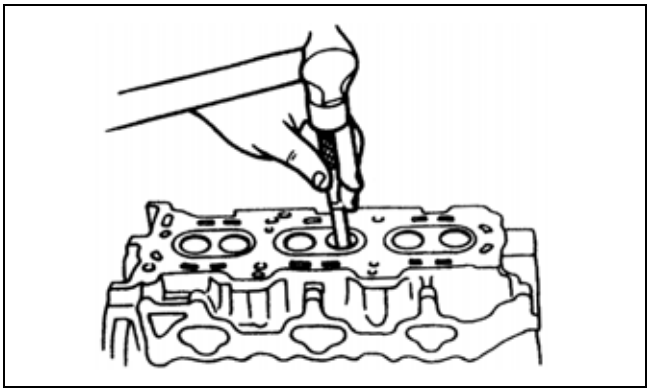

001504

Ream the valve guide hole with a 10.5 mm reamer to true the hole and remove any burrs.

IMPORTANT: Turn the reamer in a clockwise direction, NEVER counterclockwise.

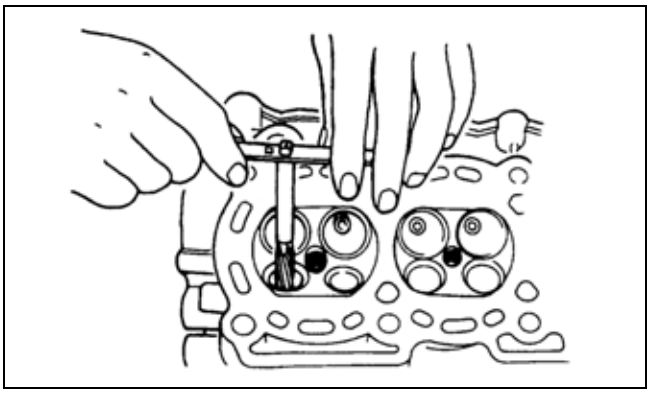

001505

Heat the cylinder head to a temperature of 80 to 100°C (176 to 212°F). Apply heat uniformly so the head will not become distorted.

Use a valve guide installer to drive the new valve guide into the hole until the attachment contacts the cylinder head.

After installation, check the valve guide protrusion. The protrusion for the intake and exhaust valves should be 0.55 in. (14 mm).

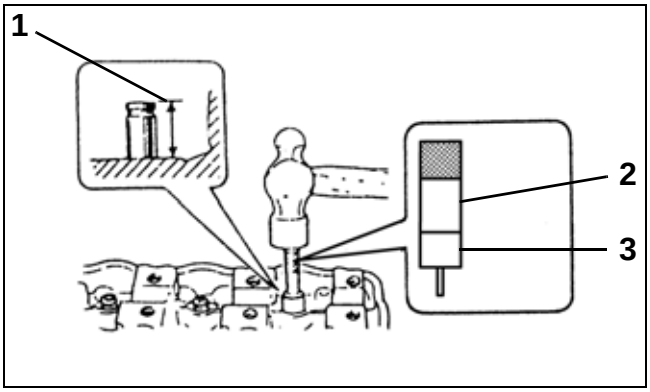

1. Valve guide protrusion 001506
2. Valve guide installer handle
3. Valve guide installer attachment

Ream the valve guide bore with a 5.5 mm reamer. Clean and oil the valve guide bore after reaming.

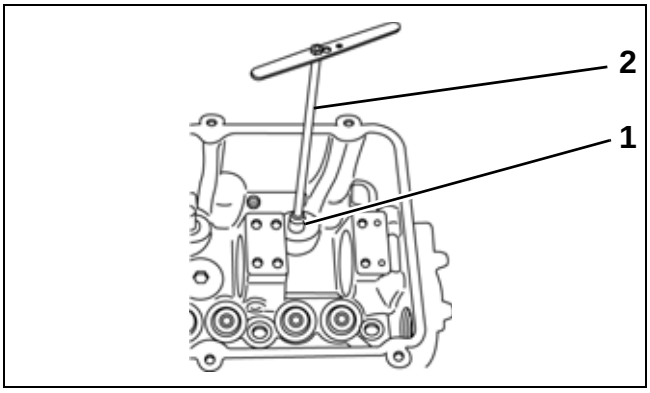

1. Valve guide 001507
2. Reamer

Valve Head and Valve Seat

Use a set of “V” blocks to support the valve on a surface plate. Use a dial gauge to measure the valve stem runout.

The service limit for valve stem runout is 0.002 in. (0.05 mm). If the measurement exceeds this specification, replace the valve.

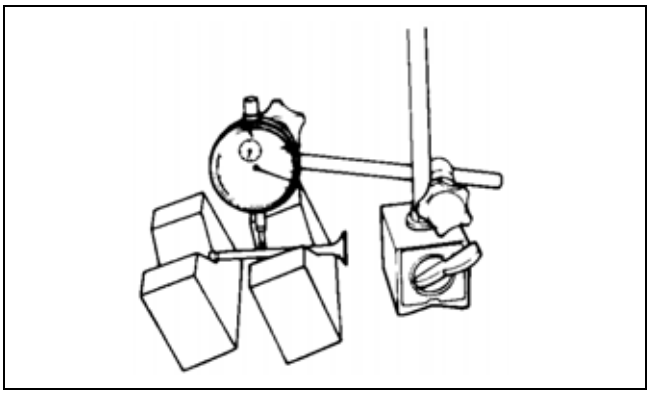

001495

Use a “V” block to support the valve on a surface plate. Use a dial gauge to measure the valve head radial runout.

The service limit for valve head radial runout is 0.003 in. (0.08 mm). If the measurement exceeds this specification, replace the valve.

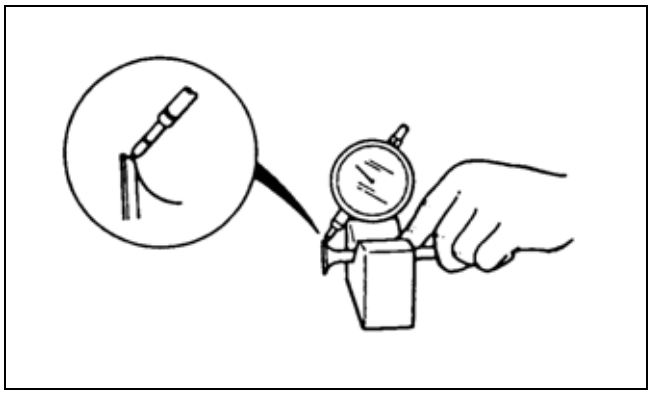

001496

Use vernier calipers to measure the thickness of the valve head.

If the measurement exceeds the service limit, replace the valve.

Valve Head Thickness		
Standard	IN	0.04 in. (1.0 mm)
	EX	0.05 in. (1.3 mm)
Service Limit	IN	0.02 in. (0.5 mm)
	EX	0.03 in. (0.7 mm)

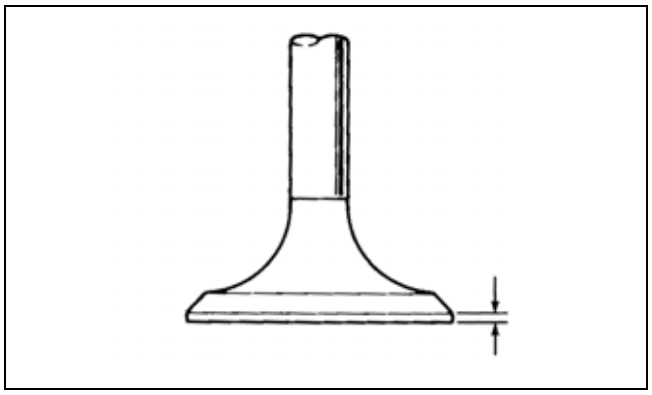

001497

Measure the valve seat contact width as follows:

- Remove all carbon deposits from the valve and the valve seat.
- Coat the valve seat evenly with Prussian blue (or equivalent).
- Install the valve into the valve guide.
- Place a valve lapper on the valve.
- Rotate the valve while gently tapping the valve contact area against the seat. Repeat until a continuous pattern in the Prussian Blue is seen.

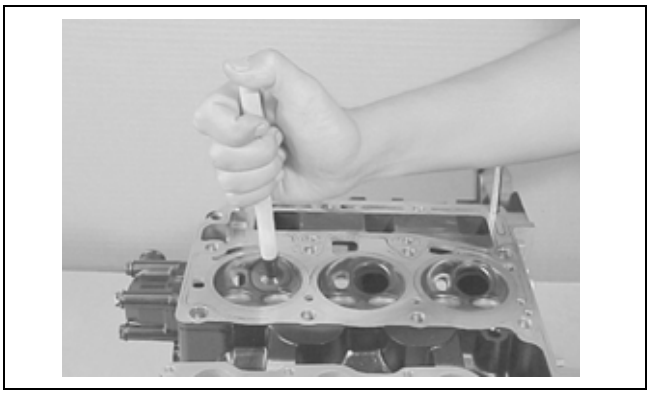

001498

Use vernier calipers to measure the valve seat contact width.

If the measurement exceeds the specification, reface the valve seat.

Valve Seat Contact Width	
Intake valve	0.05 – 0.06 in. (1.3 – 1.5 mm)
Exhaust valve	0.05 – 0.06 in. (1.3 – 1.5 mm)

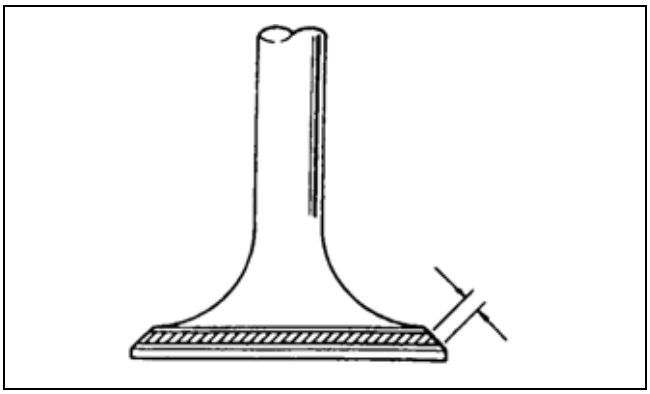

001499

Valve Seat Refacing

WARNING

To avoid personal injury, wear eye protection when using a cutter.

Remove all carbon deposits from the valve and the valve seat.

Use a 45° angle cutter to reface valve seat.

IMPORTANT: Turn the cutter in a clockwise direction, NEVER counterclockwise.

Check the valve seat contact width.
- If the width is greater than the specification, reface the valve seat using a 15° angle cutter.
- If the width is less than the specification, reface the valve seat using a 45° angle cutter again.

Clean up any burrs by using a 45° angle cutter very lightly.

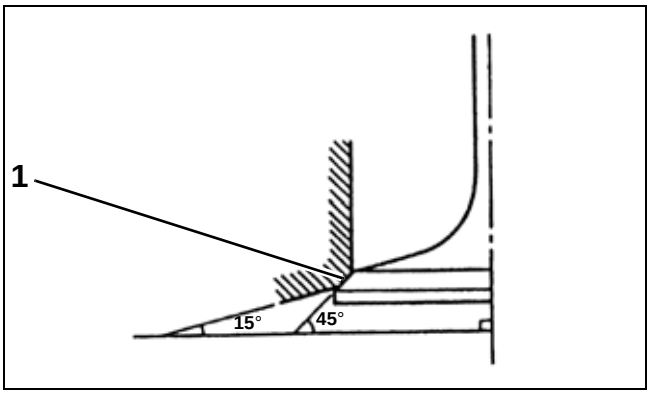

1. Valve seat 001500

Lap the valve on the valve seat in two steps: first with coarse grit lapping compound applied to the face, and then with fine grit lapping compound.

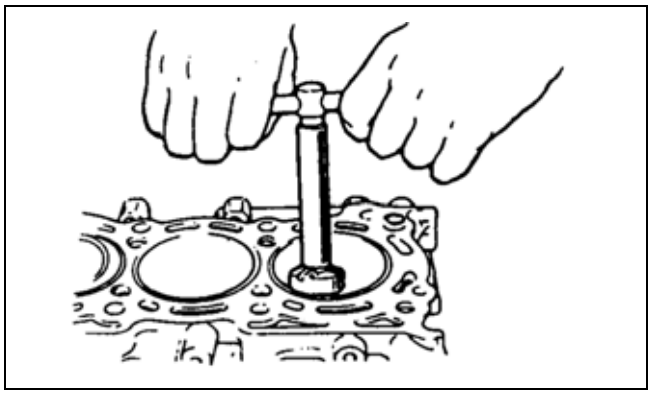

001502

Valve Spring

Check the strength of the valve spring by measuring its free length with vernier calipers.

If the spring's free length is less than the service limit, replace the valve spring.

Valve Spring Free Length	
Standard	1.865 in. (47.38 mm)
Service Limit	1.791 in. (45.48 mm)

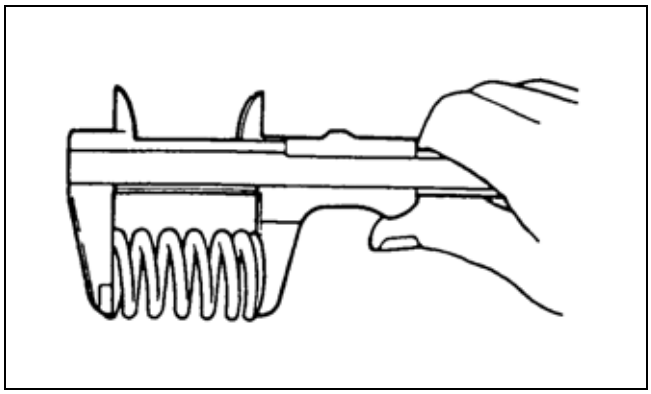

001508

Use a spring tester to measure the valve spring preload.

If the spring's preload is less than the service limit, replace the valve spring.

Valve Spring Preload	
Standard	43 to 50 lbs. (193 to 223 N) for 1.48 in. (37.5 mm)
Service Limit	40 lbs. (177 N) for 1.48 in. (37.5 mm)

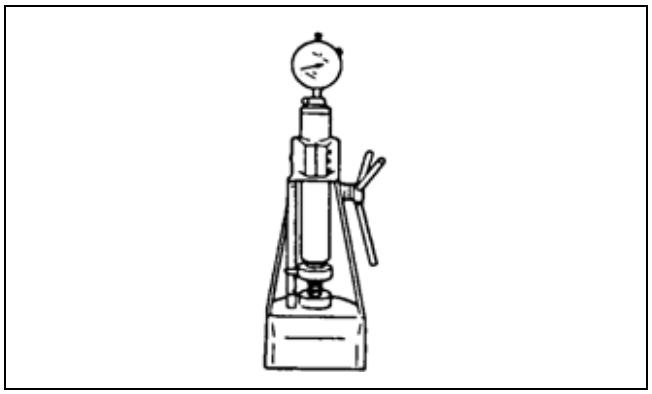

001509

Use a square and a surface plate to check each spring for squareness (clearance between the end of the valve spring and the square).

The service limit for valve spring squareness is 0.08 in. (2.0 mm). If the measurement exceeds this specification, replace the valve spring.

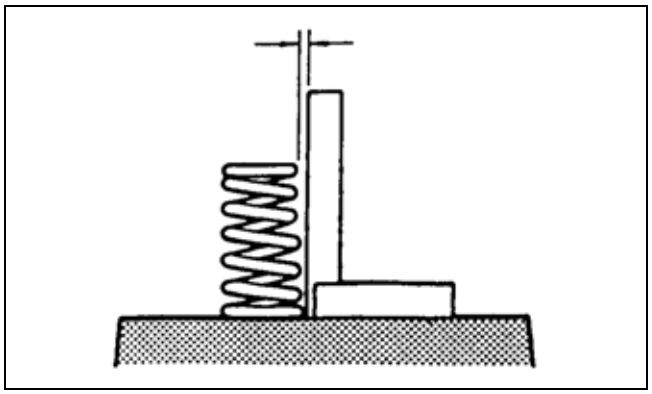

001510

Assembly

IMPORTANT: Before assembling the cylinder head, inspect and service the components. Refer to "Inspection and Servicing" on page 139.

Install the valve spring seat to the cylinder head.

Apply engine oil to a new valve stem seal and the spindle of the valve guide installer attachment. Fit the seal to the spindle, then install the seal to the valve guide by pushing on the installer by hand. Make sure that the seal is properly fixed to the valve guide.

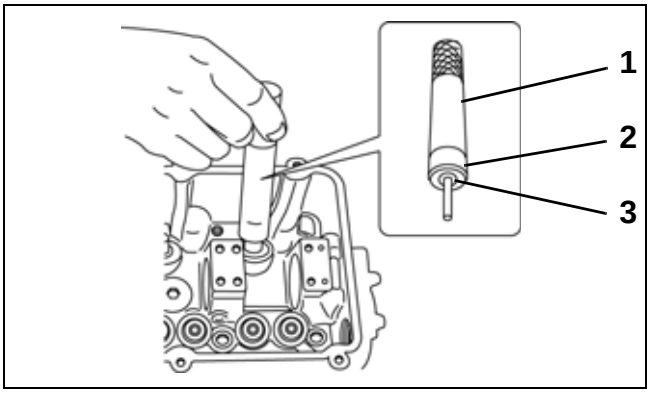

1. Valve guide installer handle
2. Valve guide installer attachment
3. Valve stem seal

001518

Apply engine oil to the valve stem and the valve guide bore. Install the valve in the valve guide bore.

Install the valve spring and the valve retainer. Make sure that the narrow spiral area of the valve spring is facing toward the valve seat.

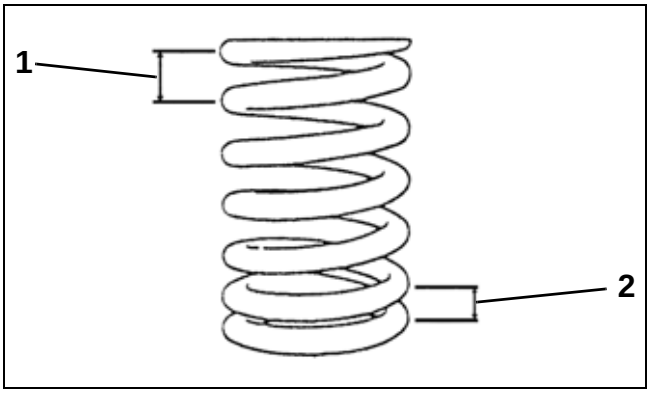

1. Wide-pitch spiral (retainer side)
2. Narrow-pitch spiral (seat side)

001520

Use a Valve Lifter, P/N 346186, and Attachment, P/N 5000899, to compress the valve springs.

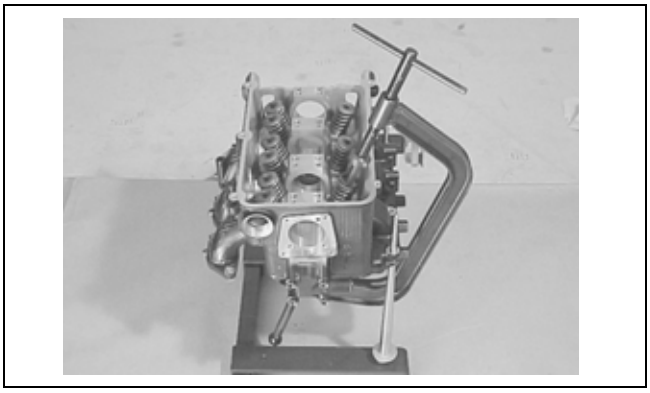

001467

Use tweezers to install the valve cotters while the valve springs are compressed. Make sure that the valve cotters are properly seated in the valve stem groove.

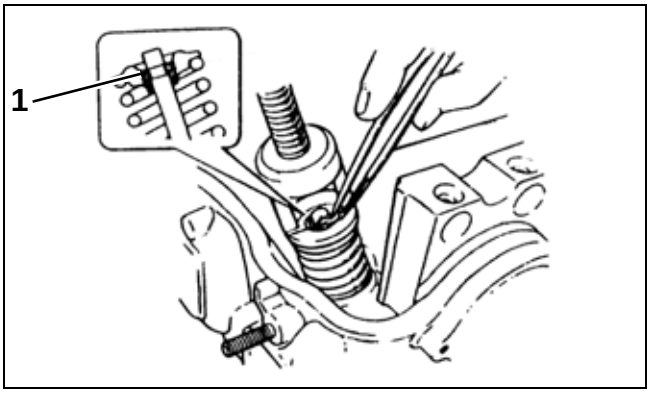

1. Cotters 001468

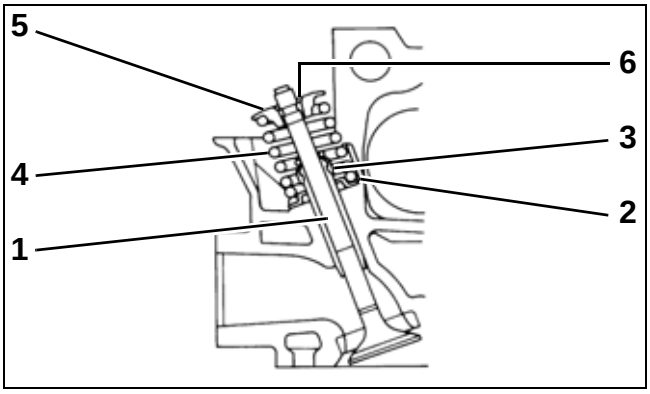

1. Valve 001517
2. Valve spring seat
3. Valve stem seal
4. Valve spring
5. Valve retainer
6. Cotters

Apply engine oil to the surface of each camshaft lobe and journal. Install the camshaft from timing sprocket side of the cylinder head.

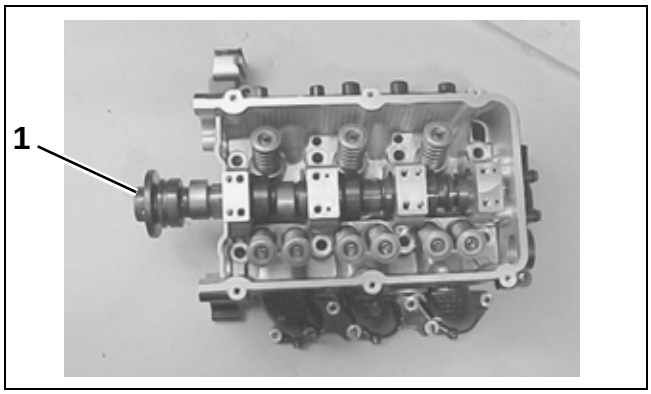

1. Camshaft 001466

Install the camshaft thrust plate. Install and tighten the screws securely.

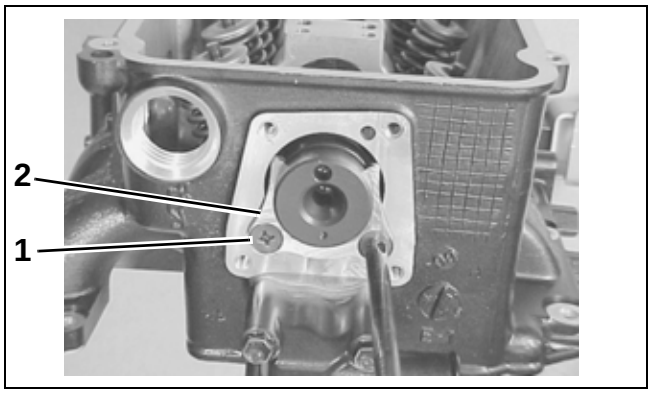

1. Screws (2) 001465
2. Camshaft thrust plate

Install the upper cylinder head cover. Install and tighten four (4) bolts securely.

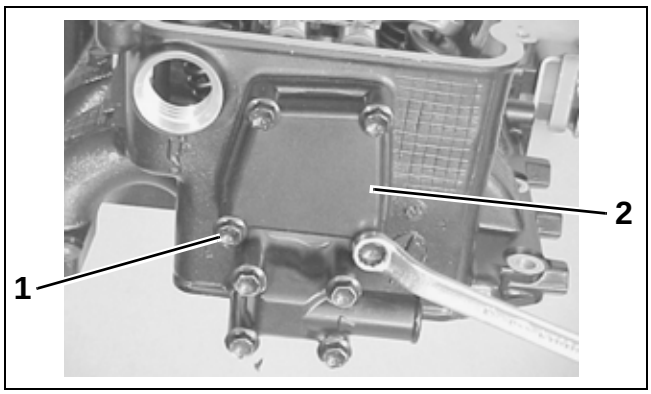

1. Bolts (4) 001462
2. Upper cylinder head cover

Install four (4) dowel pins in the rocker arm shaft brackets.

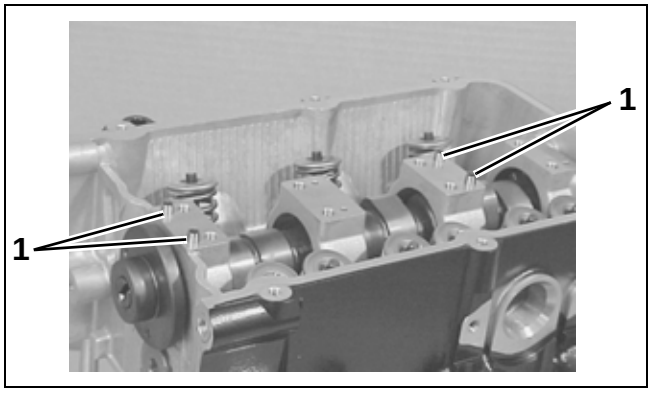

1. Dowel pins (4) 001522

IMPORTANT: The intake rocker arm shaft differs from the exhaust rocker arm shaft as shown. During assembly, make sure that each shaft is being installed in the correct location and direction.

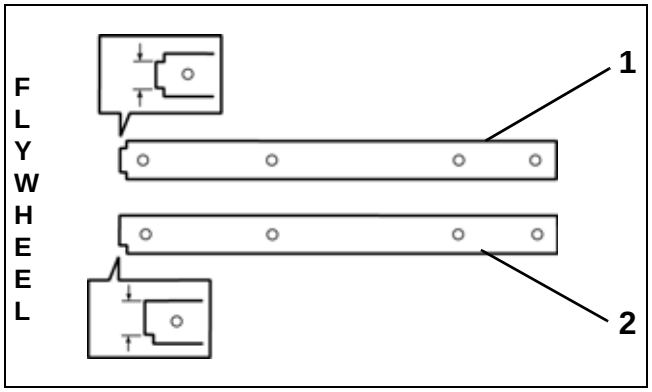

1. Intake rocker arm shaft 001464
2. Exhaust rocker arm shaft

Apply engine oil to the rocker arms and the rocker arm shaft. Install the rocker arms, the rocker arm springs, the intake rocker arm shaft, and the exhaust rocker arm shaft.

IMPORTANT: Make sure that each rocker arm and its components are installed in their original locations.

Install the rocker arm shaft brackets and the bolts. Tighten the bolts to a torque of 14 ft. lbs. (19 N·m).

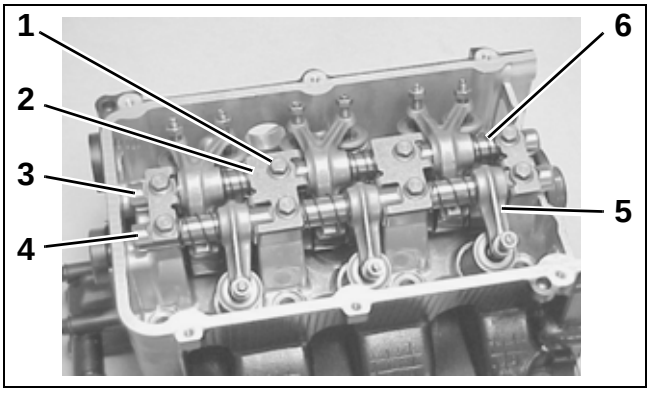

1. Bolts (8) 001463
2. Rocker arm shaft brackets (4)
3. Intake rocker arm shaft
4. Exhaust rocker arm shaft
5. Rocker arms (6)
6. Springs (6)

Fill the intake and exhaust ports with solvent to check for leaks between the valve seats and the valve face.

If a leak occurs, inspect the valve seat and the valve face for burrs or other deposits that could prevent the valve from sealing.

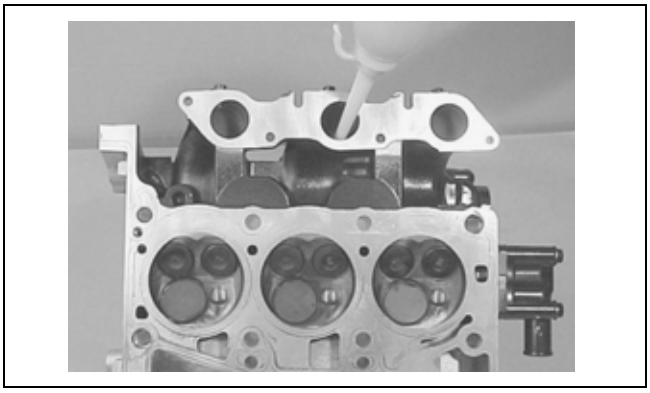

001503

PISTON, CYLINDER, AND CRANKSHAFT

Removal

First, remove the powerhead, the timing chain, and the cylinder head.

Remove the oil filter.

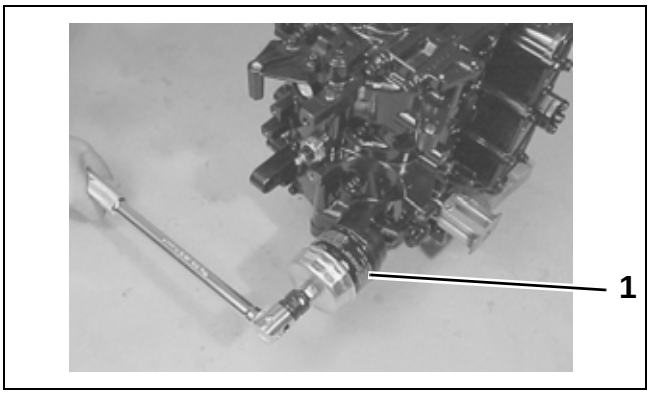

1. Oil filter 001529

Remove the oil pressure switch.

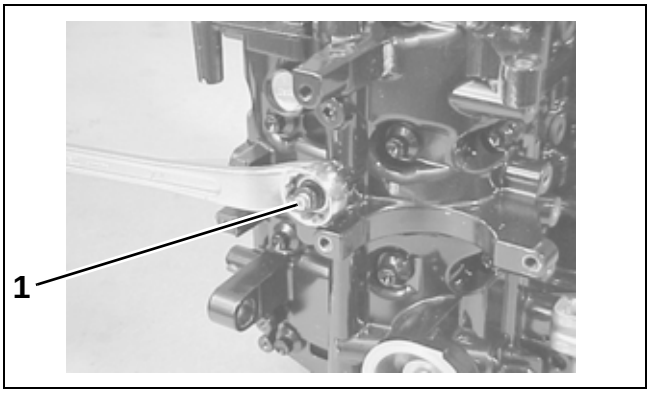

1. Oil pressure switch 001530

Remove eight (8) bolts and the exhaust cover.

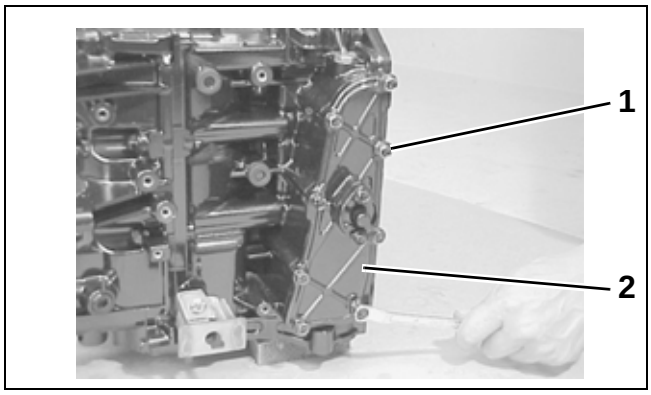

1. Bolts (8) 001531
2. Exhaust cover

Remove eight (8) outer bolts, then eight (8) inner bolts. Remove the crankcase from the cylinder block.

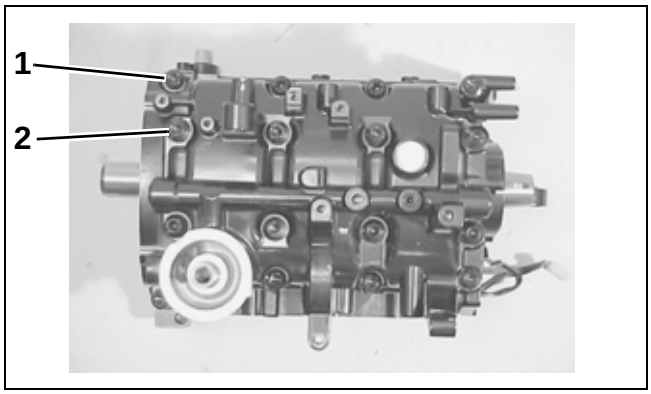

1. Outer bolts (8) 001532
2. Inner bolts (8)

For proper assembly, use quick drying paint to mark the corresponding cylinder number on each connecting rod and connecting rod cap.

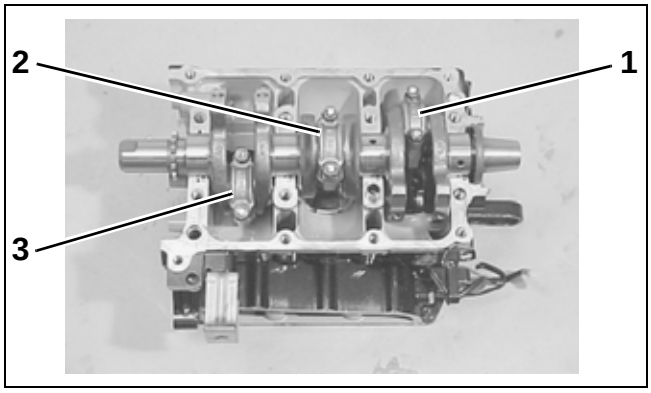

1. Cylinder No. 1 001533
2. Cylinder No. 2
3. Cylinder No. 3

Remove connecting rod cap nuts and the connecting rod caps.

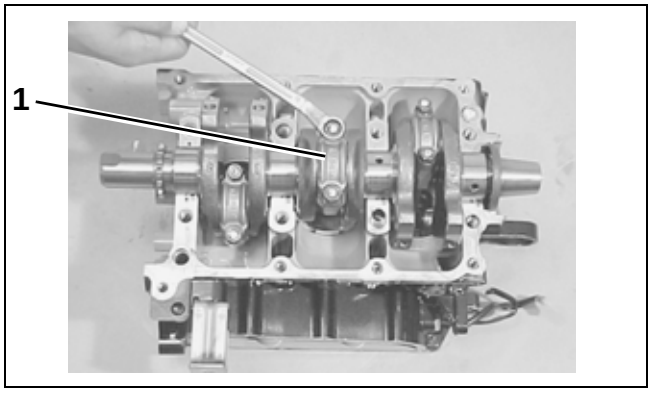

1. Connecting rod cap (3) 001534

To prevent damage to the crank pin and the cylinder walls, install a piece of hose over the threads of the connecting rod bolts.

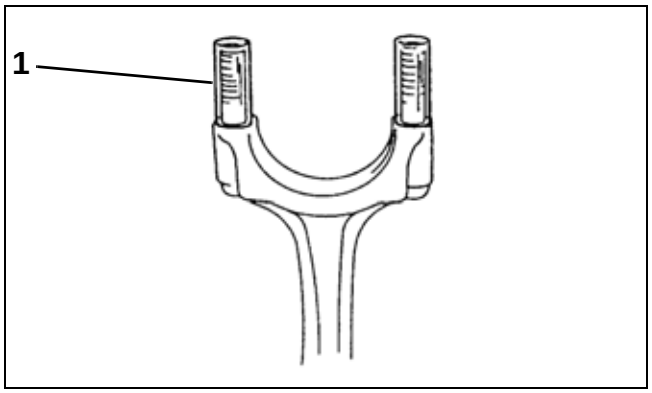

1. Connecting rod bolt 001535

Remove the crankshaft.

Remove the oil seal form the crankshaft.

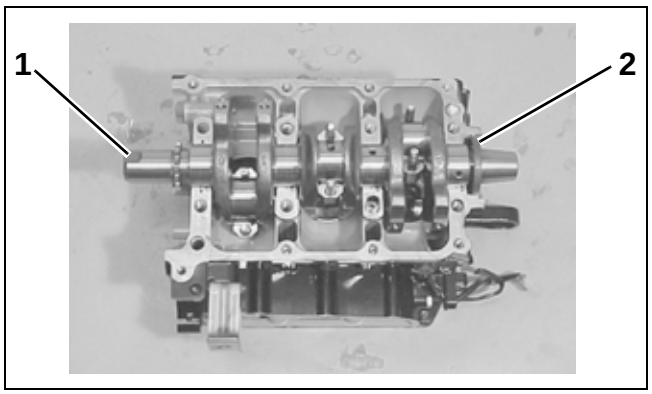

1. Crankshaft 001536
2. Oil seal

IMPORTANT: To prevent damage to the piston rings, remove any carbon deposits from the top of the cylinder bore wall before removing the piston.

Use quick drying paint to mark the corresponding cylinder number on each piston.

Push out each piston and connecting rod through the top of the cylinder bore.

Reassemble each connecting rod cap and nut onto its original connecting rod.

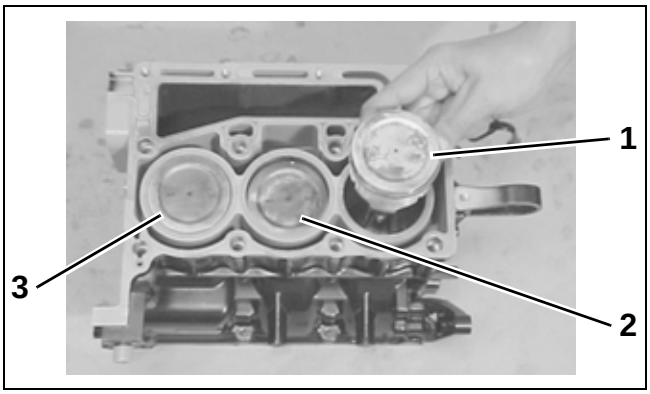

1. Cylinder No. 1 001537
2. Cylinder No. 2
3. Cylinder No. 3

Remove the top compression ring, the second compression ring, and the oil ring from the piston.

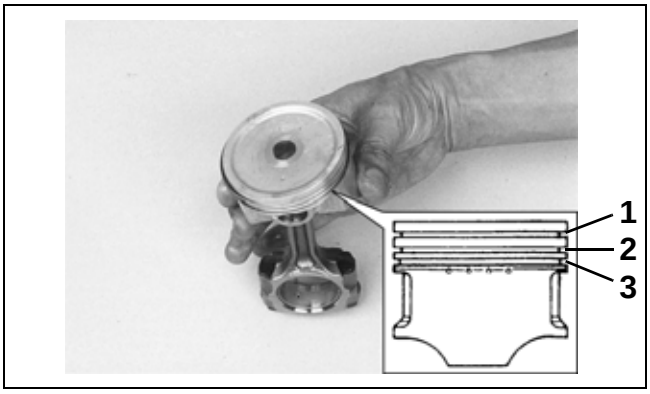

1. Top compression ring 001538
2. Second compression ring
3. Oil ring

WARNING

When removing or installing any type of retaining rings, wear eye protection to avoid personal injury.

Remove two (2) retaining rings from each piston as shown.

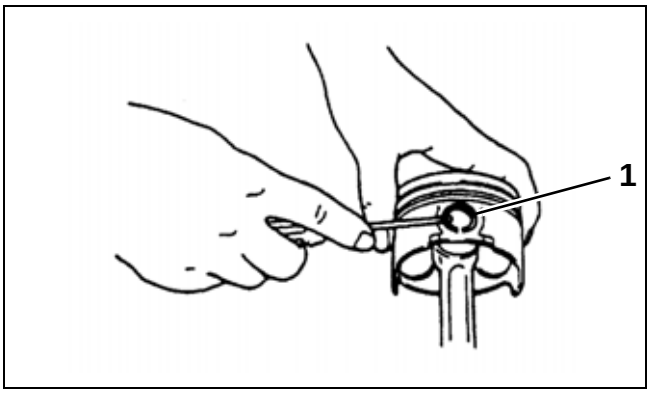

1. Retaining ring 001539

Remove the wrist pin from the connecting rod and the piston.

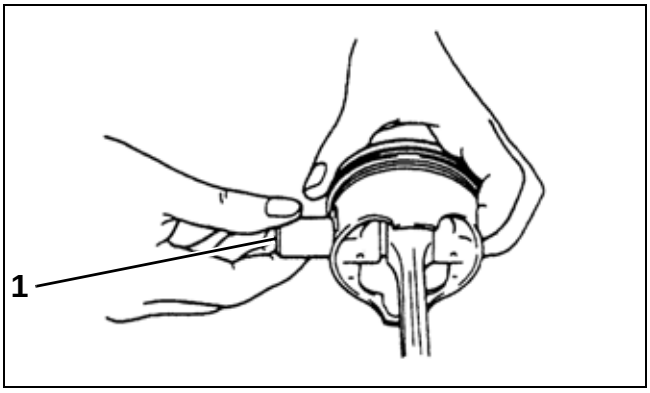

1. Wrist pin 001540

IMPORTANT: Keep the connecting rods and wrist pins with their respective pistons.

Inspection and Servicing

Cylinder

Use a straightedge and a thickness gauge to measure the cylinder distortion on the gasket surface at six (6) locations as shown.

The service limit for distortion is 0.0012 in. (0.03 mm). If any measurement exceeds this specification, resurface or replace the cylinder.

The cylinder can be resurfaced using a surface plate and #400 grit wet sandpaper. Move the cylinder in a figure eight pattern when sanding.

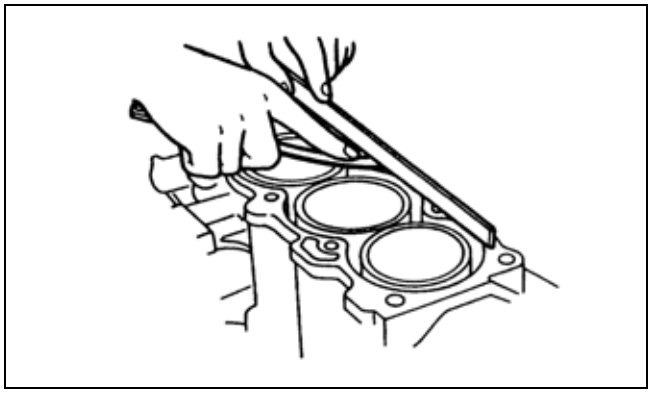

001543

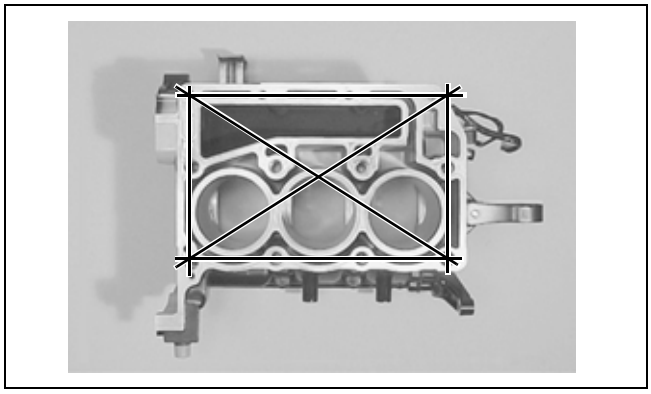

001544

Check the water jackets for clogs or obstructions.

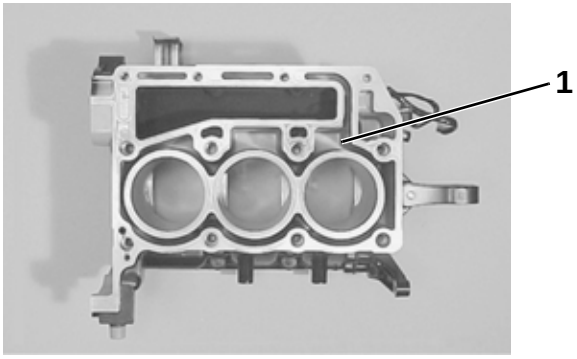

1. Water jacket 001544

Inspect the cylinder walls for scratches, roughness, or ridges which indicate excessive wear. If damaged or worn, rebore the cylinder and use an oversize piston.

Use a cylinder gauge to measure the cylinder bore in the axial direction (vertical line following crankshaft) and the transverse direction (horizontal line across crankshaft). Take measurements at two different depths: 2.0 in. (50 mm) and 3.5 in. (90 mm).

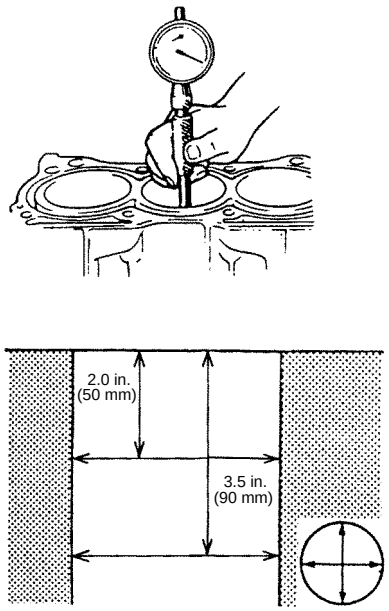

001545

The difference between the two depth measurements is the cylinder bore taper.

The difference between the axial and transverse measurements is the cylinder bore out-of-round.

The service limit for cylinder bore wear is 0.004 in. (0.10 mm). If either the taper or out-of-round measurement exceeds this specification, rebore or replace the cylinder.

Use a micrometer to measure the piston diameter at a point 0.75 in. (19 mm) above the piston skirt at a 90° angle to the wrist pin bore.

Cylinder Bore and Piston Skirt Specifications	
Cylinder Bore Diameter	2.5591 to 2.5598 in. (65.000 to 65.020 mm)
Piston Skirt Diameter	2.5579 to 2.5587 in. (64.970 to 64.990 mm)

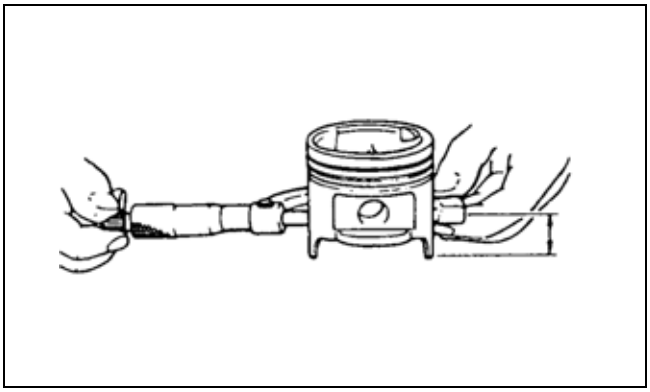

001546

To find the piston-to-cylinder bore clearance, subtract the piston skirt diameter from the previous cylinder bore measurement at a depth of 2.0 in. (50 mm).

If the measurement exceeds the service limit, replace the piston and/or the cylinder, or rebore the cylinder.

Piston-to-Cylinder Bore Clearance	
Standard	0.0008 to 0.0016 in. (0.02 to 0.04 mm)
Service Limit	0.004 in. (0.10 mm)

Pistons and Rings

Two oversize piston and piston ring components are available. Oversize pistons and piston rings are marked as shown below.

Piston	
Oversize	**ID Mark**
0.25 mm	0.25
0.50 mm	0.50

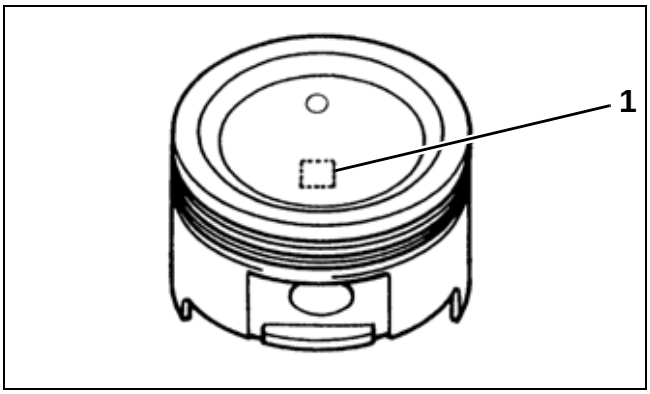

1. ID mark – piston 001548

Top and Second Compression Rings	
Oversize	**ID Mark**
0.25 mm	25
0.50 mm	50

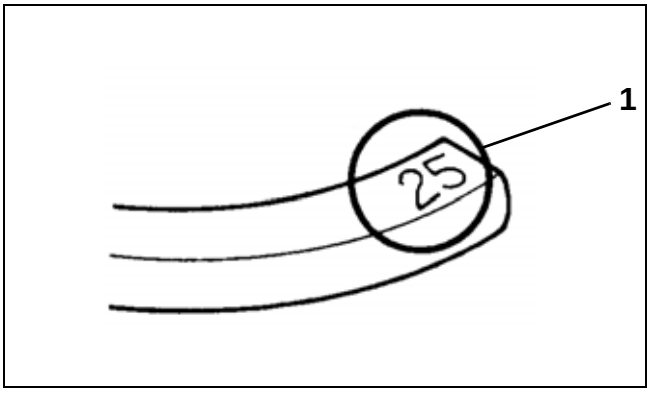

1. ID mark – top and second compression rings 001549

Oil Ring	
Oversize	**ID Mark**
0.25 mm	Two blue marks
0.50 mm	Red mark

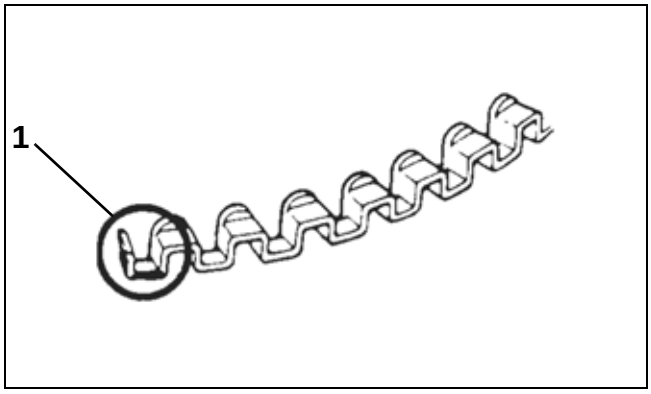

1. ID mark - oil ring 001550

Inspect the pistons for faults, cracks, and other damage. Replace any damaged pistons.

Inspect the piston ring grooves. Remove any carbon deposits. Clean and dry the piston thoroughly.

Fit the compression ring into the groove. Use a thickness gauge to measure the clearance between the ring and the groove.

If the measurement exceeds the service limit, replace the piston and/or the piston rings.

Piston Ring-to-Groove Clearance		
Standard	Top	0.0012 to 0.0027 in. (0.03 to 0.07 mm)
	2nd	0.0008 to 0.0024 in. (0.02 to 0.06 mm)
Service Limit	Top	0.005 in. (0.12 mm)
	2nd	0.004 in. (0.10 mm)

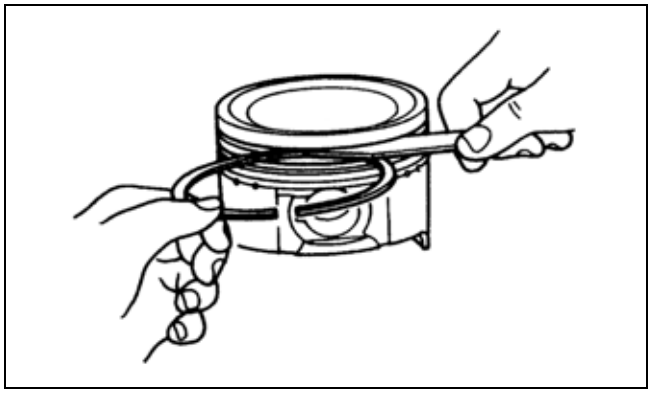

001551

Piston Ring Groove Width	
Top compression ring	0.0400 to 0.0410 in. (1.02 to 1.04 mm)
2nd compression ring	0.0476 to 0.0484 in. (1.21 to 1.23 mm)
Oil ring	0.0790 to 0.0800 in. (2.01 to 2.03 mm)

Piston Ring Thickness	
Top compression ring	0.038 to 0.039 in. (0.97 to 0.99 mm)
2nd compression ring	0.046 to 0.047 in. (1.17 to 1.19 mm)

Insert the piston ring into the lowest position of the cylinder bore. Use a thickness gauge to measure the piston ring end gap.

If the measurement exceeds the service limit, replace the piston rings.

Piston Ring End Gap		
Standard	Top	0.005 to 0.011 in. (0.12 to 0.27 mm)
	2nd	0.014 to 0.020 in. (0.35 to 0.50 mm)
Service Limit	Top	0.028 in. (0.70 mm)
	2nd	0.039 in. (1.00 mm)

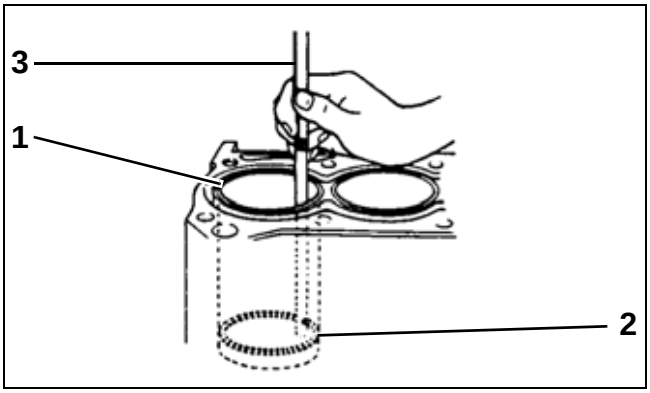

001552

1. *Cylinder*
2. *Piston ring*
3. *Thickness gauge*

Use vernier calipers to measure the piston ring free end gap.

If the measurement exceeds the service limit, replace the piston rings.

Piston Ring Free End Gap		
Standard	Top	0.36 in. (9.1 mm)
	2nd	0.35 in. (9.0 mm)
Service Limit	Top	0.29 in. (7.3 mm)
	2nd	0.28 in. (7.2 mm)

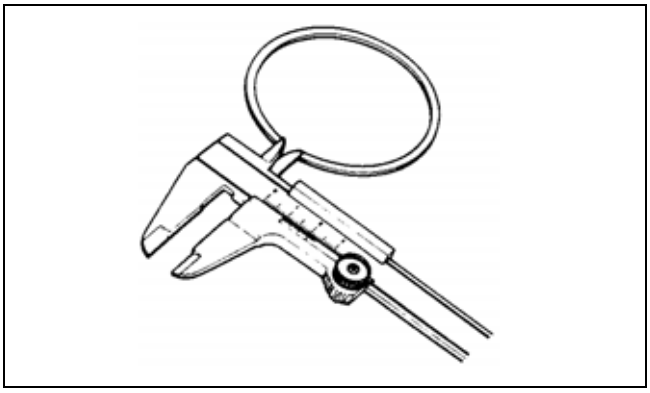

001553

Wrist Pin and Bores

Inspect the wrist pin and the bores in the piston and the connecting rod for wear and damage.

Use a micrometer to check the wrist pin outside diameter.

If the measurement exceeds the service limit, replace the wrist pin.

Wrist Pin Outside Diameter	
Standard	0.6297 to 0.6299 in. (15.995 to 16.000 mm)
Service Limit	0.6291 in. (15.980 mm)

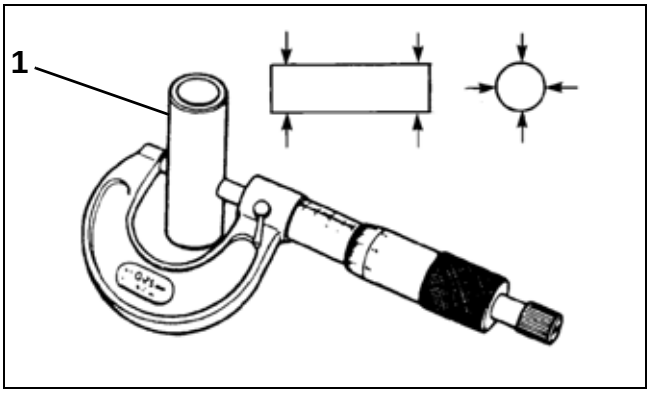

1. Wrist pin 001554

Use dial calipers to measure the piston bore inside diameter.

If the measurement exceeds the service limit, replace the piston assembly.

Piston Bore Inside Diameter	
Standard	0.6302 to 0.6305 in. (16.006 to 16.014 mm)
Service Limit	0.6311 in. (16.030 mm)

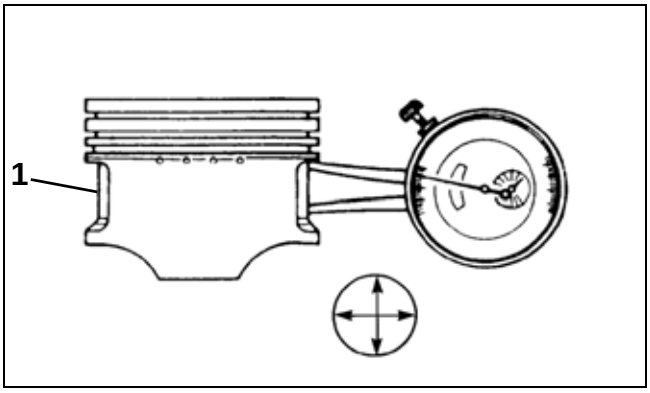

1. Piston bore 001555

Use dial calipers to measure the connecting rod small bore inside diameter.

If the measurement exceeds the service limit, replace the connecting rod.

Connecting Rod Small Bore Inside Diameter	
Standard	0.6300 to 0.6304 in. (16.003 to 16.011 mm)

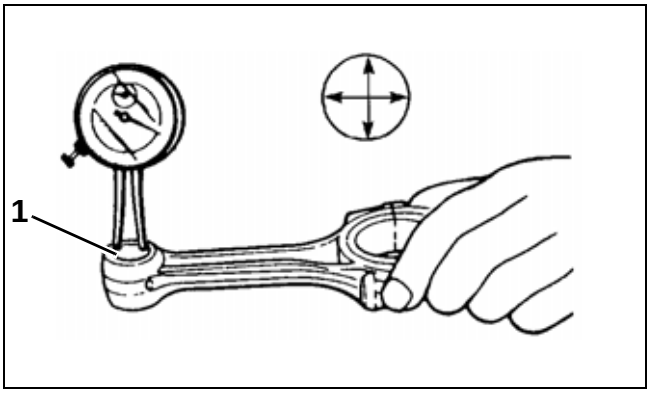

1. Connecting rod small bore 001556

To check the wrist pin-to-piston bore clearance, subtract the wrist pin outside diameter from the piston bore inside diameter. To check the wrist pin-to-connecting rod small bore clearance, subtract the wrist pin outside diameter from the connecting rod small bore inside diameter.

If either measurement exceeds the service limit, replace the wrist pin or the piston assembly.

Wrist Pin-to-Piston Bore Clearance	
Standard	0.0002 to 0.0007 in. (0.006 to 0.019 mm)
Service Limit	0.0016 in. (0.040 mm)

Wrist Pin-to-Connecting Rod Small Bore Clearance	
Standard	0.0001 to 0.0006 in. (0.003 to 0.016 mm)
Service Limit	0.0020 in. (0.050 mm)

Connecting Rod and Crankpin

Install a connecting rod (with bearing) on the crankshaft as shown. Use a thickness gauge to measure the connecting rod large bore side clearance.

If the measurement exceeds the service limit, replace the connecting rod and/or the crankshaft.

Connecting Rod Large Bore Side Clearance	
Standard	0.0039 to 0.0098 in. (0.100 to 0.0250 mm)
Service Limit	0.0138 in. (0.350 mm)

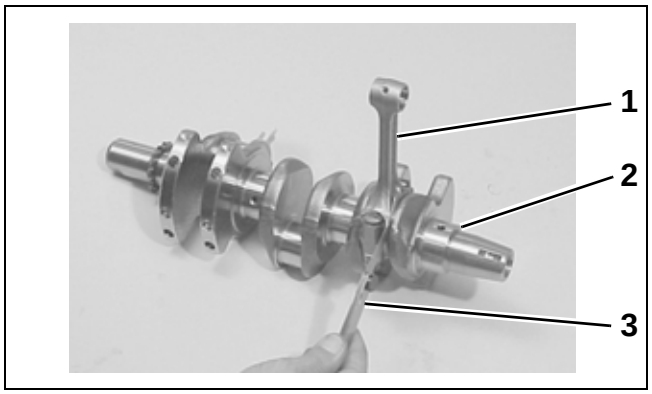

1. *Connecting rod*
2. *Crankshaft*
3. *Thickness gauge*

001557

Inspect the crankpins for wear and damage.

Measure the width of the crankpins.

Use a micrometer to measure the crankpins for out-of-round and taper.

If any crankpin is worn or damaged, or the out-of-round or taper exceeds the service limit, replace the crankshaft.

Crankpin Specifications	
Standard Width	0.870 to 0.874 in. (22.10 to 22.20 mm)
Standard Diameter	1.4166 to 1.4173 in. (35.982 to 36.000 mm)
Out-of-Round and Taper Service Limit	0.0004 in. (0.010 mm)

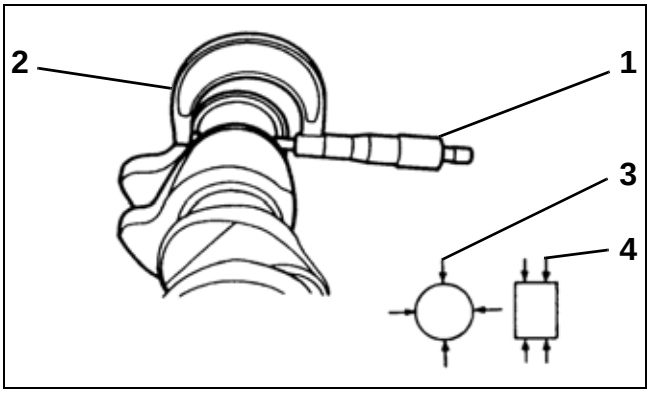

1. *Micrometer*
2. *Crankshaft*
3. *Out-of-round measurement*
4. *Taper measurement*

001558

Use dial calipers to measure the connecting rod large bore inside diameter.

If the measurement exceeds the service limit, replace the connecting rod.

Connecting Rod Large Bore Inside Diameter	
Standard	0.8642 to 0.8661 in. (21.950 to 22.000 mm)

Connecting Rod Bearings

Inspect the bearing shells in the connecting rod large bores and connecting rod caps for the proper contact pattern and signs of fusion, pitting, burning, or flanking. Replace any damaged bearings.

IMPORTANT: NEVER replace only one bearing shell. Both halves of the bearing must be replaced if either is worn or damaged.

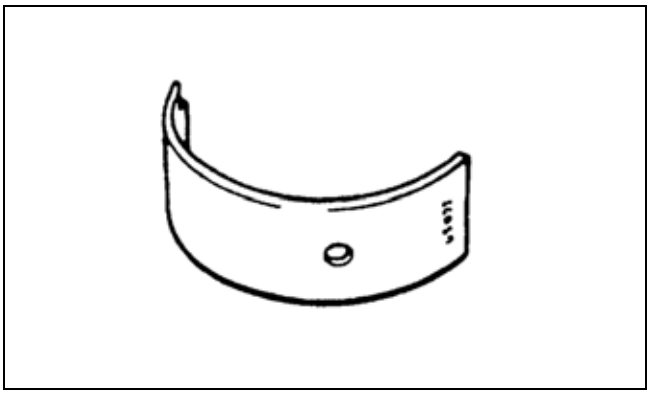

001559

Clean the surface of the connecting rod, the cap, the bearing, and the crankpin.

Install the connecting rod bearing shells into their original connecting rod and cap.

IMPORTANT: Make sure that the alignment tabs on the bearing shells properly engage the alignment notches in the connecting rod and cap. DO NOT apply oil to the bearing at this time.

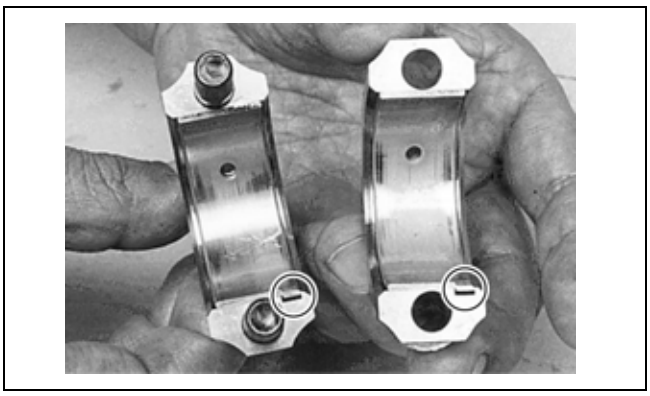

001560

Place a piece of Plastigage on the crankpin, parallel to the crankshaft. DO NOT place the Plastigage over the oil hole.

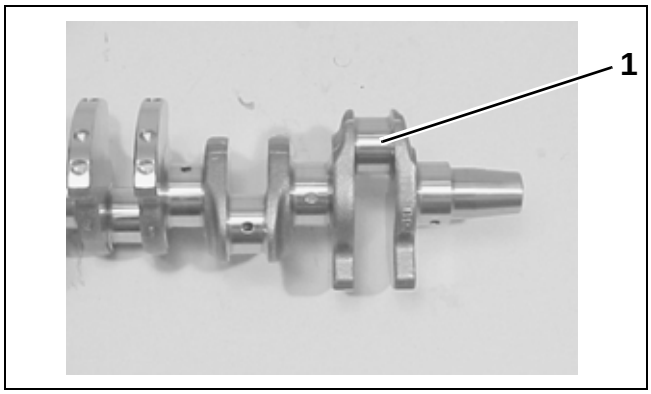

1. Crank pin 001561

Install the connecting rod cap to its corresponding connecting rod. Make sure that the arrow mark on the cap is pointing toward the flywheel side.

Apply engine oil to the connecting rod bolts. Install and tighten the connecting rod cap nuts in the following manner:

- **STEP 1** – Tighten the nuts to an initial torque of 13 ft. lbs. (18 N·m).
- **STEP 2** – Tighten the nuts to a final torque of 26 ft. lbs. (35 N·m).

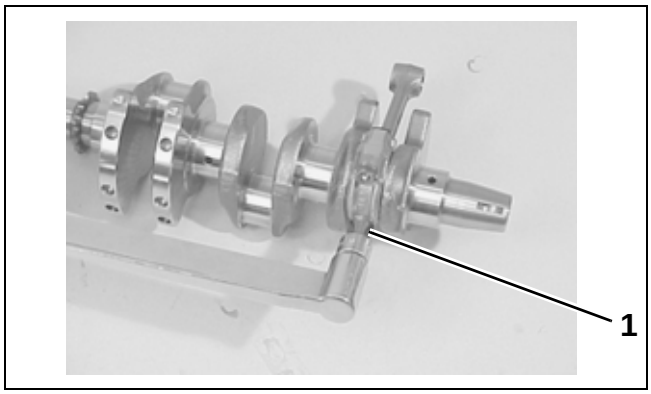

1. Connecting rod bolts (2) 001563

IMPORTANT: DO NOT rotate the connecting rod or the crankshaft while the Plastigage is in place.

Remove the connecting rod and the cap from the crankpin.

Use the scale on the Plastigage envelop to measure the Plastigage on the crankpin at its widest point.

If the measurement exceeds the service limit, replace the connecting rod bearing.

Connecting Rod Large Bore Oil Clearance	
Standard	0.0008 to 0.0016 in. (0.020 to 0.040 mm)
Service Limit	0.0026 in. (0.065 mm)

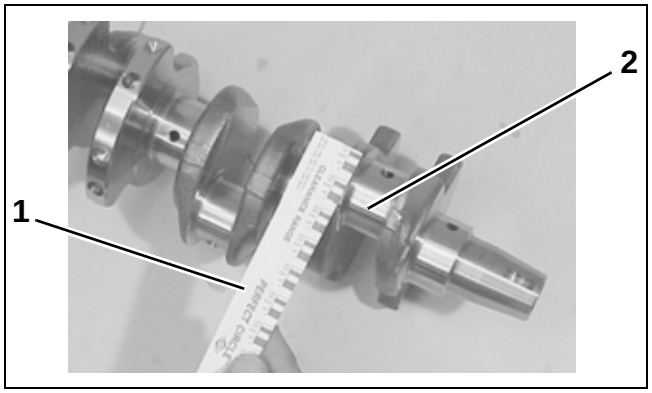

1. Scale
2. Plastigage

001564

Crankshaft

Use a dial gauge to measure the center journal runout.

The service limit for crankshaft center journal runout is 0.002 in. (0.04 mm). If the measurement exceeds the service limit, replace the crankshaft.

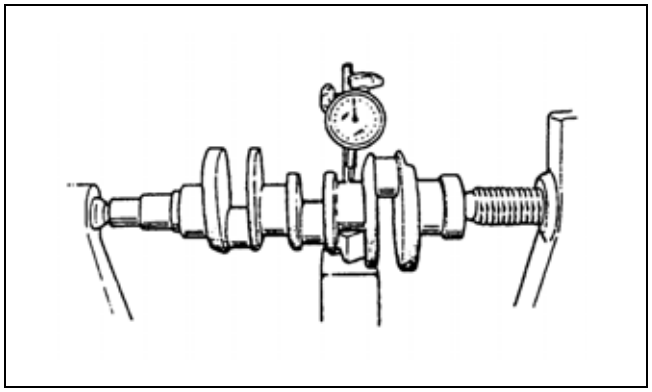

001565

Assemble the crankshaft thrust bearing, the crankshaft journal bearing, the crankshaft, and the crankcase to the cylinder block.

Apply engine oil to 16 crankcase bolts, then place the bolts in the bolt holes. Tighten the bolts to the specified torque.

Crankcase Bolt Torques	
8 mm	18 ft. lbs. (25 N·m)
10 mm	29 ft. lbs. (40 N·m)

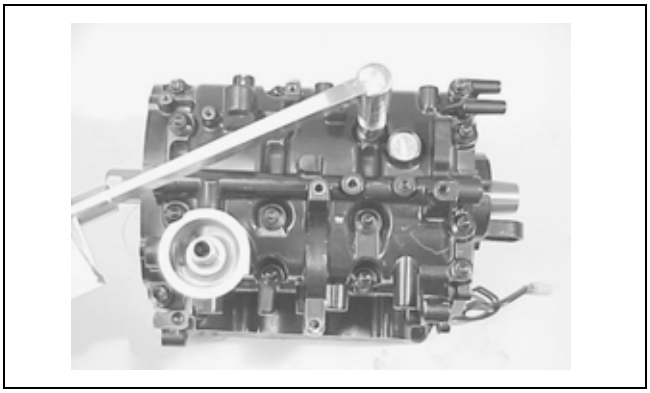

001574

Use a dial gauge to measure the play in the axial (thrust) direction of crankshaft.

If the measurement exceeds the service limit, replace the crankshaft thrust bearing.

Crankshaft Thrust Play	
Standard	0.004 to 0.012 in. (0.11 to 0.31 mm)
Service Limit	0.014 in. (0.35 mm)

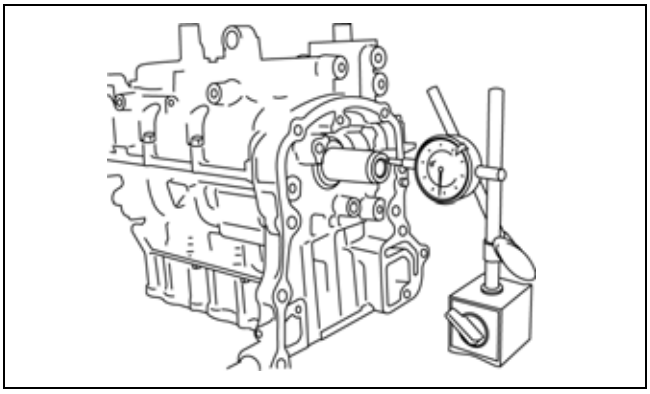

001566

Crankshaft Thrust Bearing Flange Thickness	
Standard	0.0972 to 0.0992 in. (2.470 to 2.520 mm)

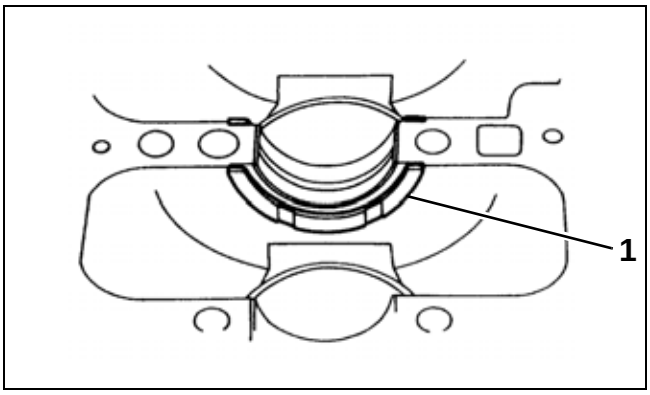

1. Crankshaft thrust bearing flange 001567

Inspect the crankshaft journals for wear and damage.

Use a micrometer to measure the crankshaft journal for out-of-round and taper.

If any crankshaft journal is worn or damaged, or the out-of-round or taper exceeds the service limit, replace the crankshaft.

Crankshaft Journal Specifications	
Standard Diameter	1.5741 to 1.5748 in. (39.982 to 40.000 mm)
Out-of-Round and Taper Service Limit	0.0004 in. (0.010 mm)

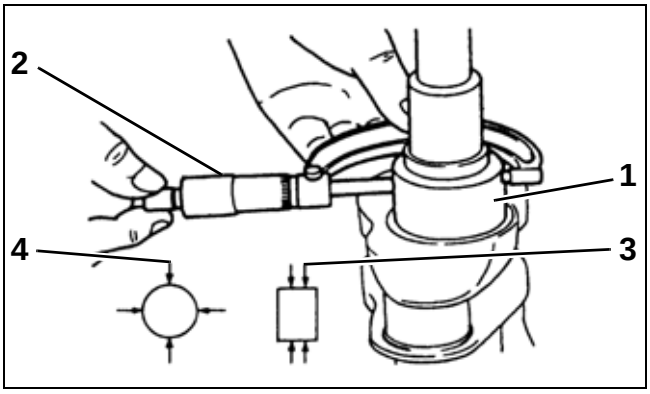

1. Crankshaft journal 001568
2. Micrometer
3. Taper measurement
4. Out-of-round measurement

Crankshaft Main Bearings

Inspect the crankshaft bearing shells for pitting, scratches, and wear. Replace any damaged bearings.

IMPORTANT: NEVER replace only one bearing shell. Both halves of the bearing must be replaced if either is worn or damaged.

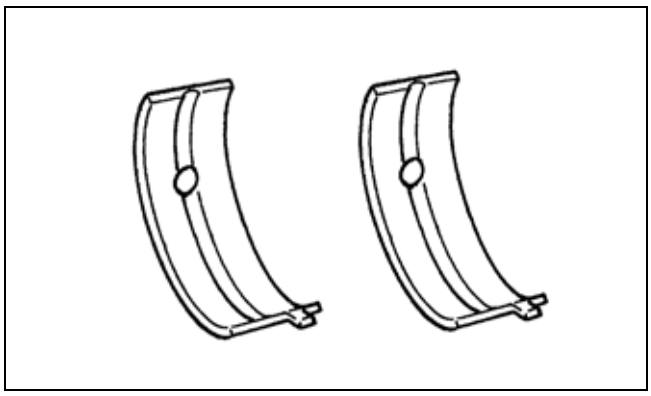

001569

Clean the surface of the bearing holders, the bearings, and the main bearing journals.

Install the bearing shells into their original locations.

Install the main bearings in the cylinder and the crankcase.

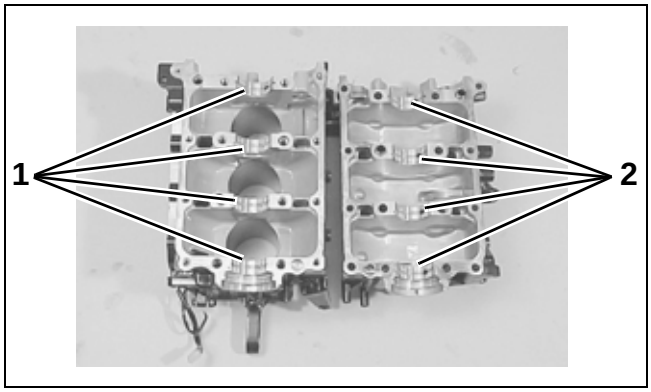

1. Upper bearing shells 001570
2. Lower bearing shells

IMPORTANT: Make sure that the alignment tabs on the bearing shells properly engage the alignment notches in the connecting rod and cap. DO NOT apply oil to the bearing at this time.

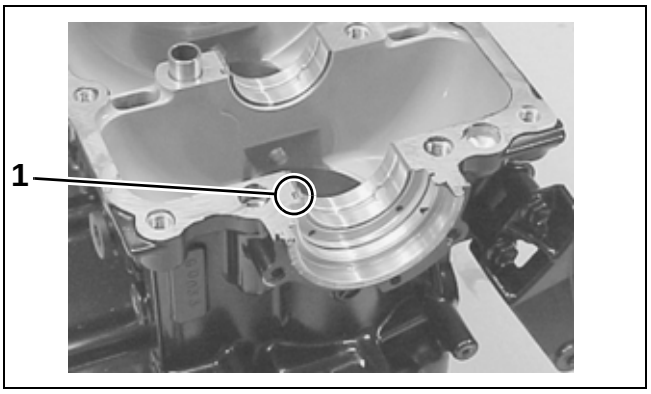

1. Bearing tab 001571

Install the crankshaft in the cylinder.

Place a piece of Plastigage across the full width of the bearing on the journal, parallel to the crankshaft. DO NOT place the Plastigage over the oil hole.

IMPORTANT: DO NOT rotate the crankshaft while the Plastigage is in place.

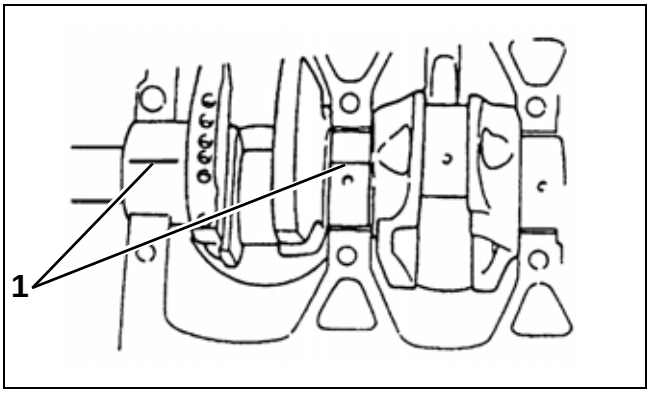

1. Plastigage 001572

Install the crankcase onto the cylinder.

Apply engine oil to 16 crankcase bolts, then place the bolts in the bolt holes. Tighten the bolts in the following manner:

- **STEP 1** – Tighten the bolts to the initial torque according to the tightening sequence.
- **STEP 2** – Next, tighten the bolts to the second torque according to the tightening sequence.
- **STEP 3** – Finally, tighten the bolts to the final torque according to the tightening sequence.

Crankcase Bolt Torques			
Bolt size	**Initial**	**Second**	**Final**
8 mm	36 in. lbs. (4 N·m)	12 ft. lbs. (16 N·m)	15 ft. lbs. (20 N·m)
10 mm	71 in. lbs. (8 N·m)	24 ft. lbs. (32 N·m)	30 ft. lbs. (40 N·m)

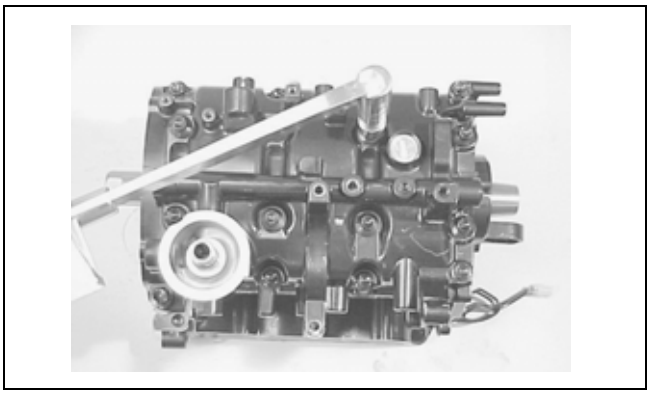

001574

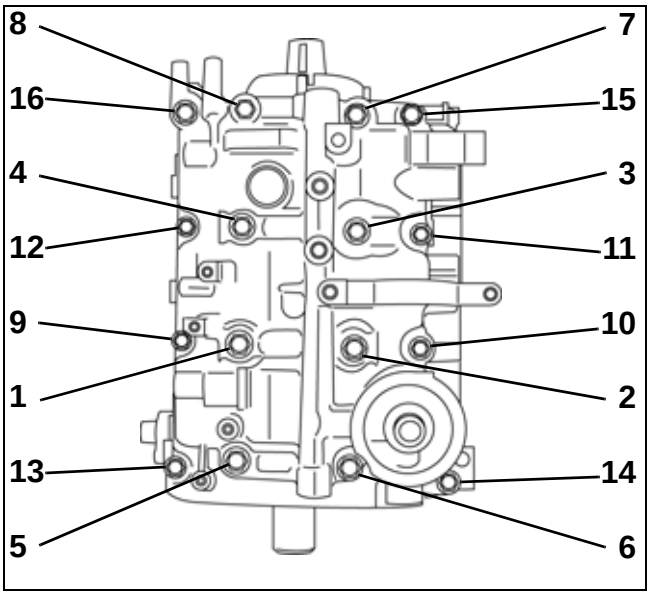

001573

Remove eight (8) outer bolts, then eight (8) inner bolts. Remove the crankcase from the cylinder block.

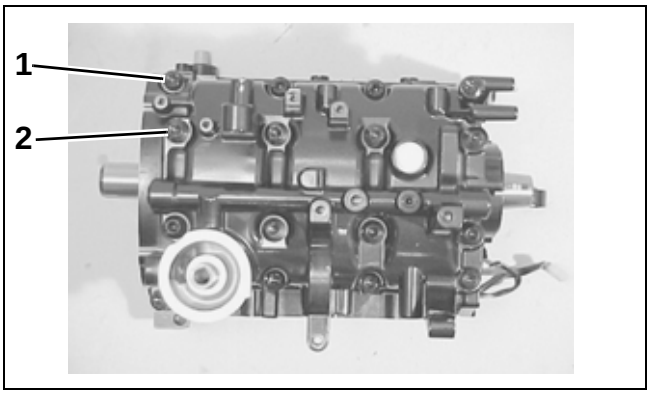

1. Outer bolts (8)
2. Inner bolts (8)
001532

Use the scale on the Plastigage envelop to measure the Plastigage on the journal at its widest point.

If the measurement exceeds the service limit, replace the crankshaft main bearing.

Crankshaft Journal Oil Clearance	
Standard	0.0008 to 0.0016 in. (0.020 to 0.040 mm)
Service Limit	0.0026 in. (0.065 mm)

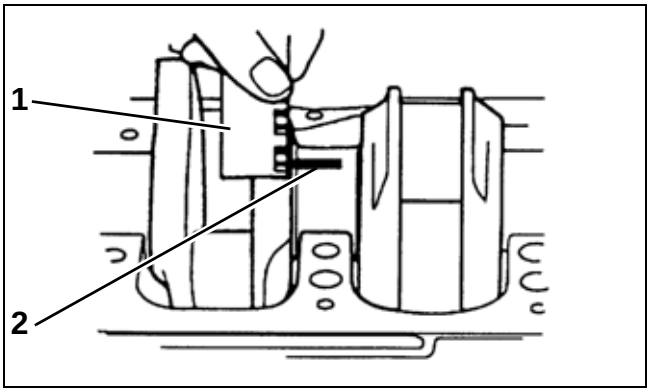

1. Scale
2. Plastigage
001575

Selecting a Main Bearing

Whenever a main bearing requires replacement, select a new bearing according to following procedure.

- Check the main bearing journal diameter.

The upper (flywheel side) crank web of the No.1 cylinder has four (4) stamped numerals. The numerals 1, 2, and 3 represent the following journal diameters.

Numeral Stamped	Main Bearing Journal Diameter
1	1.5746 to 1.5748 in. (39.994 to 40.000 mm)
2	1.5743 to 1.5746 in. (39.998 to 39.994 mm)
3	1.5741 to 1.5743 in. (39.982 to 39.988 mm)

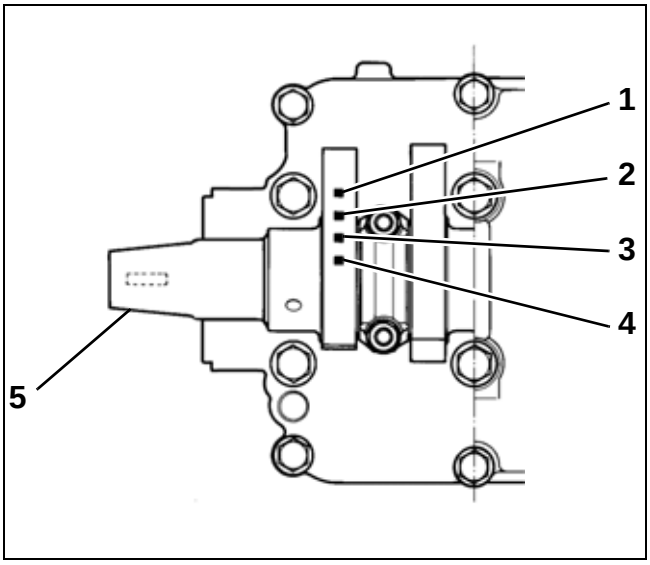

1. No. 1 journal code
2. No. 2 journal code
3. No. 3 journal code
4. No. 4 journal code
5. Crankshaft (flywheel side)
001576

- Check the inside diameter of the bearing holder **without** the bearing installed.

The starboard side of the cylinder block has four (4) stamped code letters. The letters A, B, and C represent the following bearing holder inside diameter shown below.

Code	Crankshaft Bearing Holder Diameter (without bearing)
A	1.7323 to 1.7325 in. (44.000 to 40.006 mm)
B	1.7325 to 1.7328 in. (40.006 to 40.012 mm)
C	1.7328 to 1.7330 in. (40.012 to 40.018 mm)

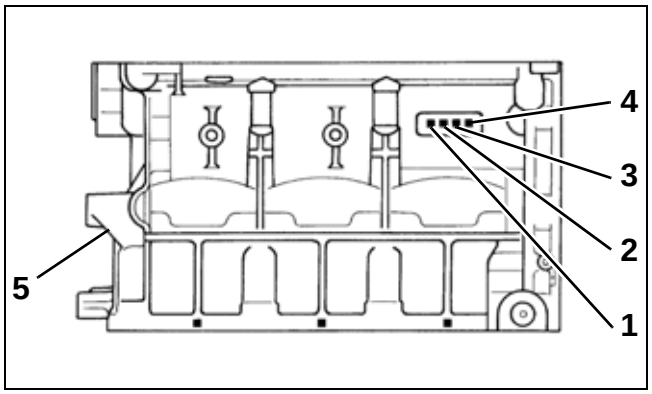

001577

1. *No. 1 holder code*
2. *No. 2 holder code*
3. *No. 3 holder code*
4. *No. 4 holder code*
5. *Cylinder head (flywheel side)*

- There are five main bearing available, each of a different thickness. To distinguish between them, a color mark is painted at the midpoint on the rim of the bearing. Each color represents the following thickness (measured at the center of the bearing).

Color Mark	Bearing Thickness
Green	0.0768 to 0.0787 in. (1.996 to 2.000 mm)
Black	0.0787 to 0.0789 in. (1.999 to 2.003 mm)
No color	0.0788 to 0.0790 in. (2.002 to 2.006 mm)
Yellow	0.0789 to 0.0791 in. (2.005 to 2.009 mm)
Blue	0.0791 to 0.0792 in. (2.008 to 2.012 mm)

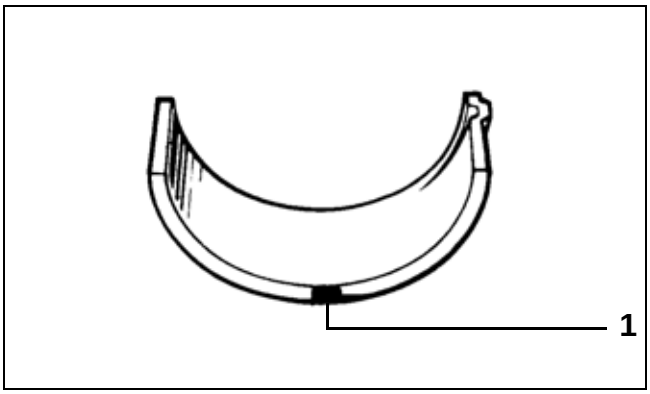

1. *Color mark*

001578

- Select the correct crankshaft main bearing. Refer to the following table.

Holder Code	Journal Code		
	1	2	3
A	Green	Black	No color
B	Black	No color	Yellow
C	No color	Yellow	Blue

- Measure the crankshaft journal oil clearance again after selecting and installing the new bearing.

Installation

IMPORTANT: Before installing the pistons and the crankshaft, inspect and service the components. Refer to “Inspection and Servicing” on page 152.

IMPORTANT: If the original components are not replaced, each piston, wrist pin, connecting rod, and connecting rod cap must be assembled and installed in its original order and position.

Apply engine oil to the wrist pin and the pin bore in the connecting rod. Insert the wrist pin through the piston and the connecting rod.

Install **new** retaining rings to secure the wrist pin.

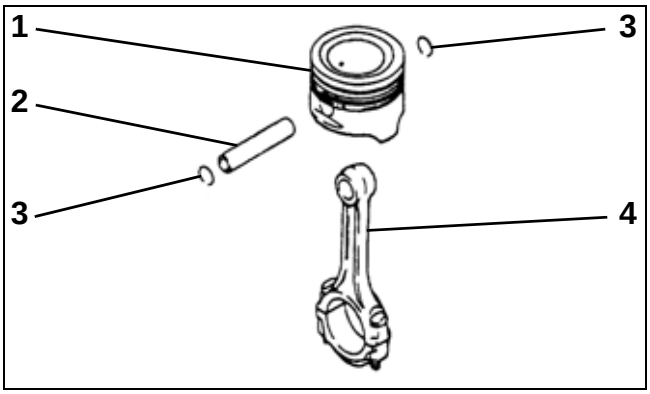

1. *Piston* 001584
2. *Wrist pin*
3. *Piston pin retaining clip*
4. *Connecting rod*

Make sure the connecting rod is installed in the direction shown.

Make sure the retaining rings are installed with the gap facing either up or down.

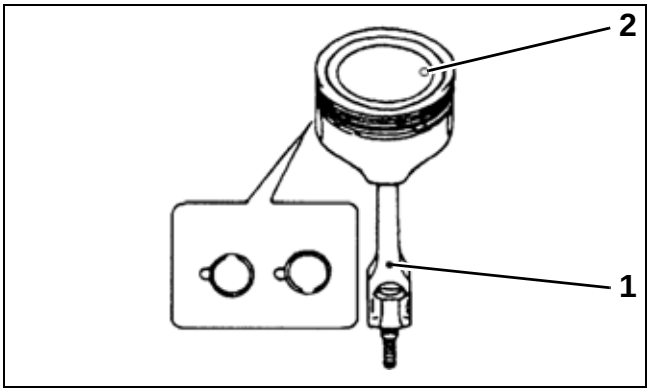

1. *Oil hole* 001583
2. *“O” mark (flywheel side of piston)*

Apply engine oil to the oil ring.

Install the spacer to the piston, then the side rails.

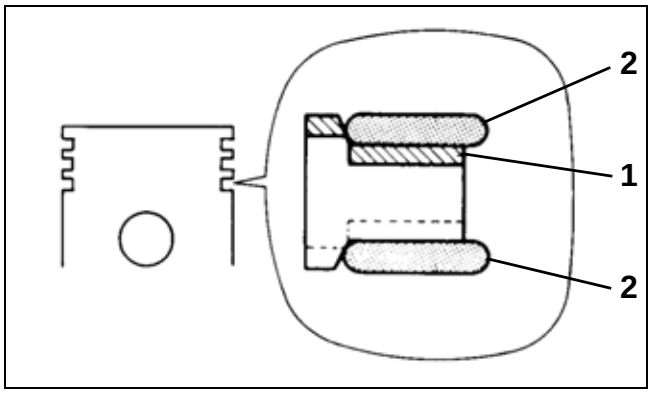

1. *Side rails* 001585
2. *Spacer*

CAUTION

When installing the spacer, do not allow the ends to overlap in the groove.

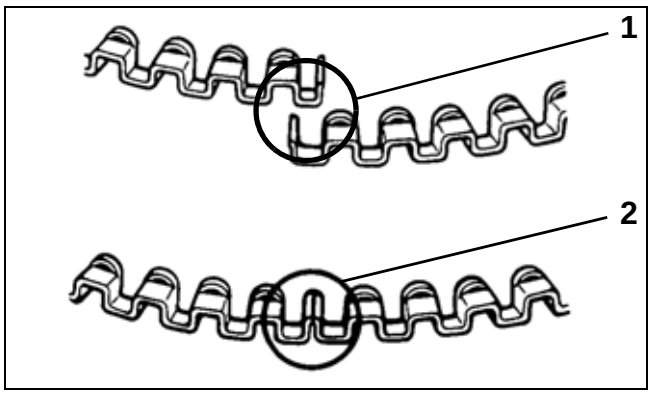

1. *Incorrect (overlapping ends)* 001586
2. *Correct (joined ends)*

Apply engine oil to the compression rings.

Install the second compression ring to the piston, then the top compression ring.

IMPORTANT: The top compression ring differs from the second compression ring in shape and color of the surface contacting the cylinder wall.

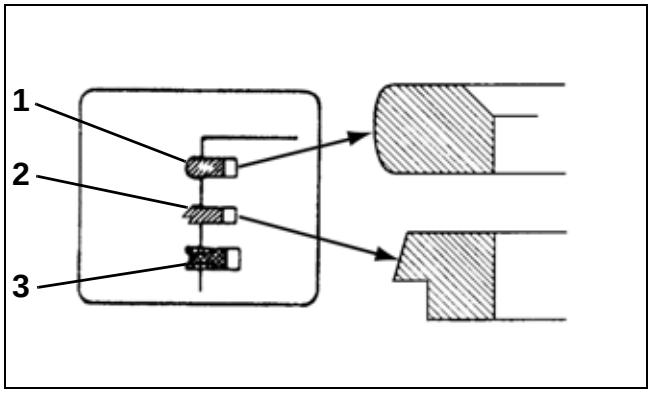

1. *Top compression ring* 001587
2. *2nd compression ring*
3. *Oil ring*

IMPORTANT: The top compression ring and the second compression ring are marked “RN” or “R”. When installing these piston rings, the marked side must face toward the top of the piston.

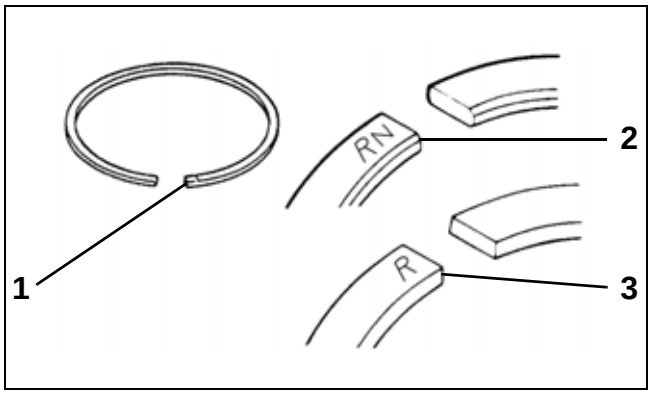

1. *ID mark location* 001588
2. *Top compression ring (“RN”)*
3. *Second compression ring (“R”)*

IMPORTANT: Position the piston rings so their gaps are each staggered by approximately 90°, as shown. Failure to stagger the piston ring gaps may result in crankcase oil dilution.

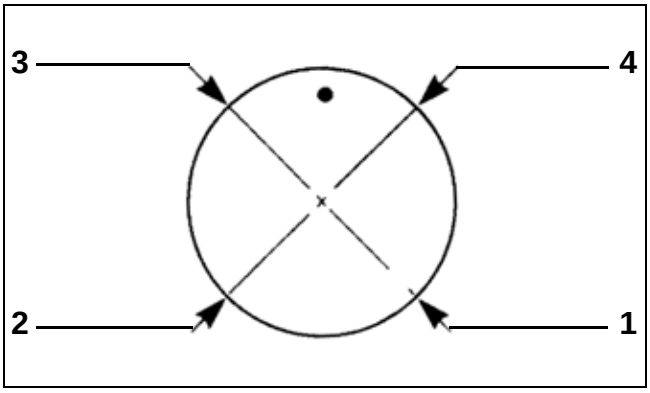

1. *Top compression ring* 001589
2. *Oil ring lower side rail*
3. *2nd compression ring*
4. *Oil ring upper side rail*

Apply engine oil to the piston and the cylinder walls. Use a piston ring compressor to insert the piston and connecting rod assembly into the cylinder bore from the cylinder head side. Position the “O” mark on the top of the piston to the flywheel side.

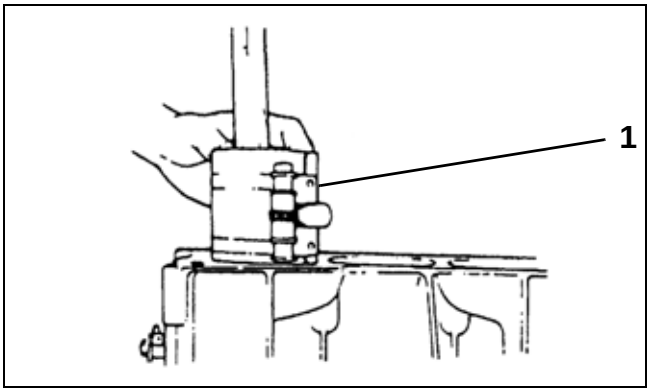

1. *Piston ring compressor* 001591

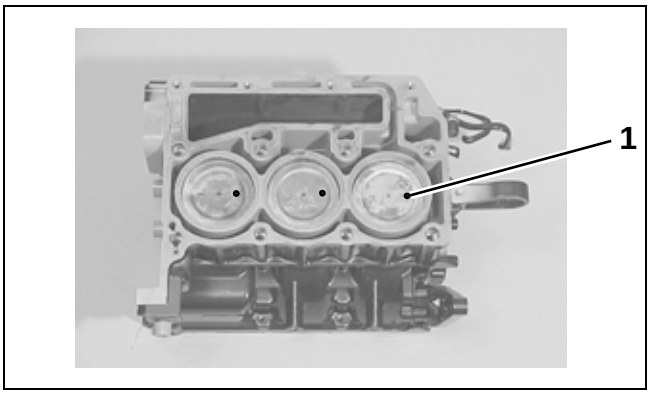

1. *“O” mark (flywheel side of piston)* 001592

If removed, install the crankshaft main bearings. Apply engine oil to the bearing wear surfaces. DO NOT apply oil between the bearing holder and the back of the bearing.

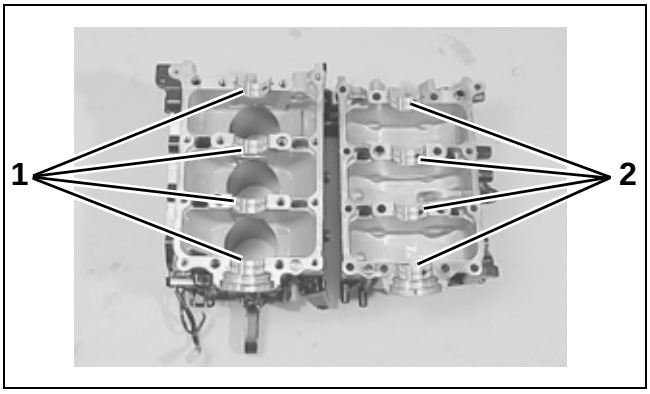

1. Upper bearing shells 001570
2. Lower bearing shells

IMPORTANT: Make sure that the bearing tab is aligned with the notches in the cylinder and the crankcase.

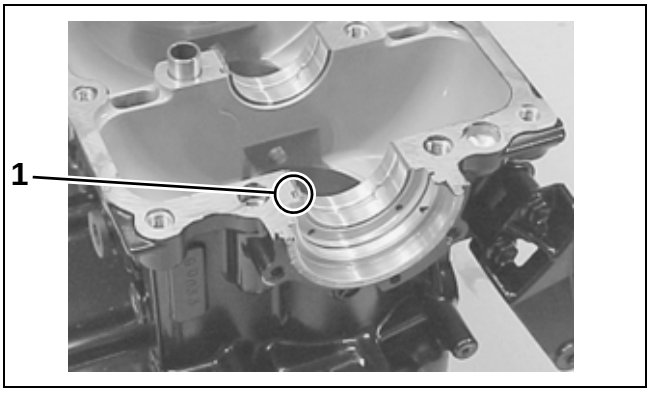

1. Bearing tab 001571

If removed, install the main thrust bearing in the cylinder block between the No. 2 and No. 3 cylinders. Apply engine oil to the bearing.

IMPORTANT: The oil groove sides of the thrust bearing must face toward the crank webs.

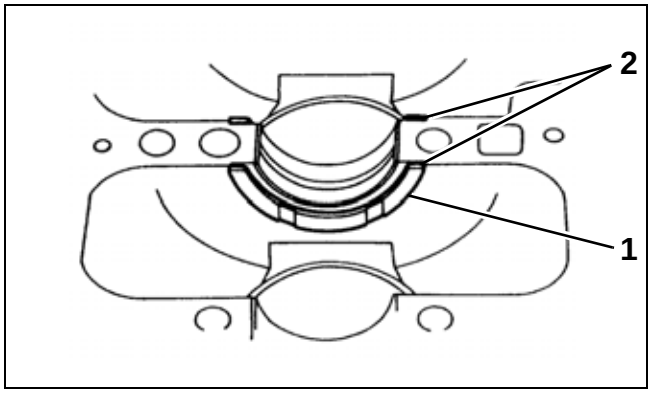

1. Thrust bearing 001567
2. Oil grooves

Apply engine oil to the lip of a **new** upper oil seal. Install the upper oil seal to the crankshaft. Make sure that the lip of the seal is facing inward.

Apply engine oil to the crank pin and the crankshaft main journal. Install the crankshaft in the cylinder.

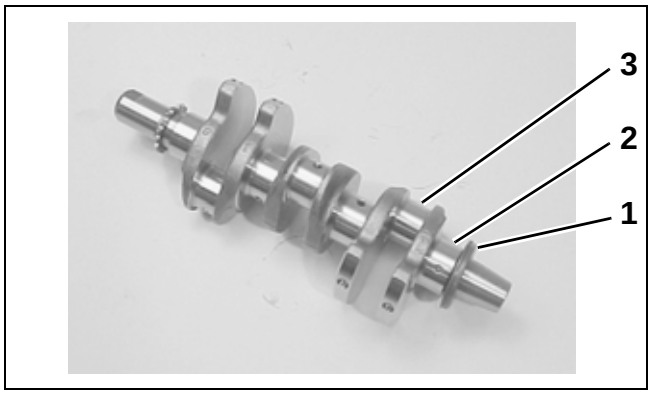

1. Oil seal 001593
2. Crankshaft main journal
3. Crank pin

IMPORTANT: Make sure that the tab of the oil seal fits into the groove in the cylinder.

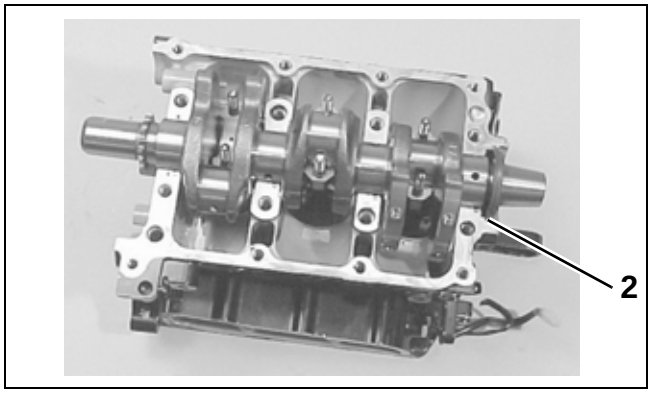

1. Cylinder groove 001594

Install the bearings. Make sure that the alignment tabs on the bearing shells properly engage the alignment notches in the connecting rod and cap.

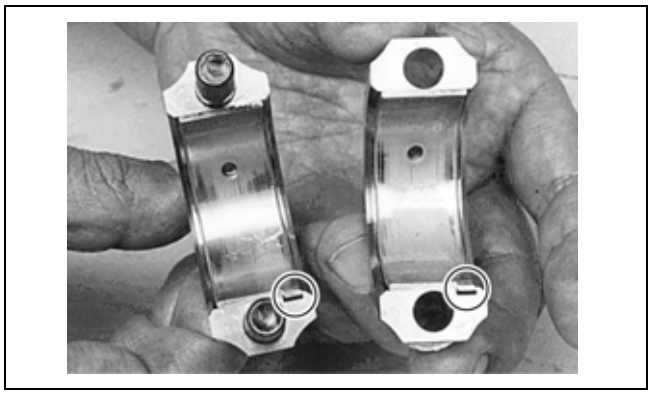

001560

Apply engine oil to the crankpin and the connecting rod bearing. Install the connecting rod cap (with bearing installed) to its corresponding connecting rod. Make sure that the arrow mark on the cap is pointing toward the flywheel side.

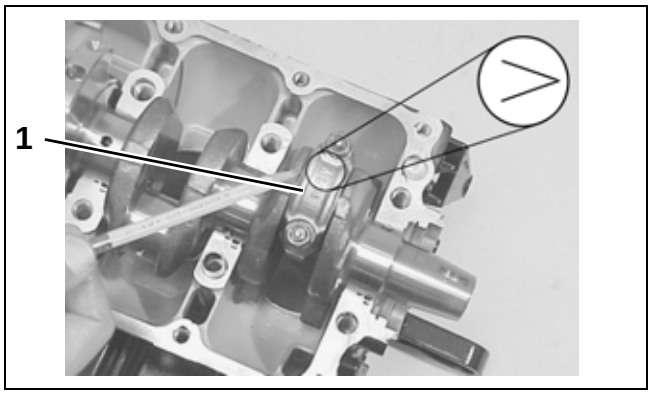

1. Connecting rod cap 001562

Apply engine oil to the connecting rod bolts. Install and tighten the connecting rod cap nuts in the following manner:

- **STEP 1** – Tighten the nuts to an initial torque of 13 ft. lbs. (18 N·m).
- **STEP 2** – Tighten the nuts to a final torque of 26 ft. lbs. (35 N·m).

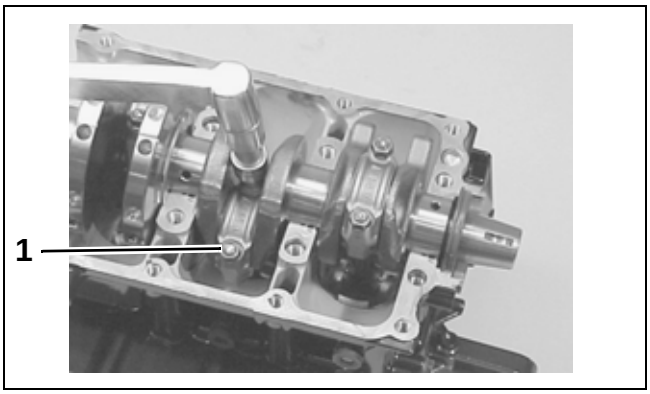

1. Connecting rod cap nuts 001595

Clean the mating surfaces of the cylinder and the crankcase.

Apply *Three Bond No. 1207B* along the entire mating surface of the crankcase. DO NOT allow any bond to contact the thrust bearing.
Install four (4) dowel pins in the cylinder.

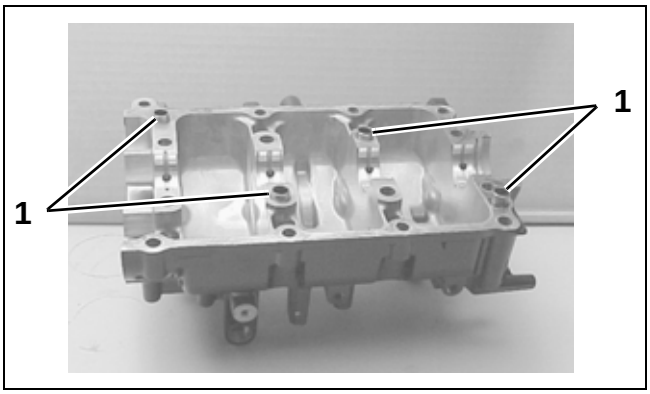

1. Dowel pins (4) 001597

Install the crankcase onto the cylinder.

Apply engine oil to 16 crankcase bolts, then place the bolts in the bolt holes. Tighten the bolts in the following manner:

- **STEP 1** – Tighten the bolts to the initial torque according to the tightening sequence.
- **STEP 2** – Next, tighten the bolts to the second torque according to the tightening sequence.

- **STEP 3** – Finally, tighten the bolts to the final torque according to the tightening sequence.

Crankcase Bolt Torques			
Bolt size	**Initial**	**Second**	**Final**
8 mm	36 in. lbs. (4 N·m)	12 ft. lbs. (16 N·m)	15 ft. lbs. (20 N·m)
10 mm	71 in. lbs. (8 N·m)	24 ft. lbs. (32 N·m)	30 ft. lbs. (40 N·m)

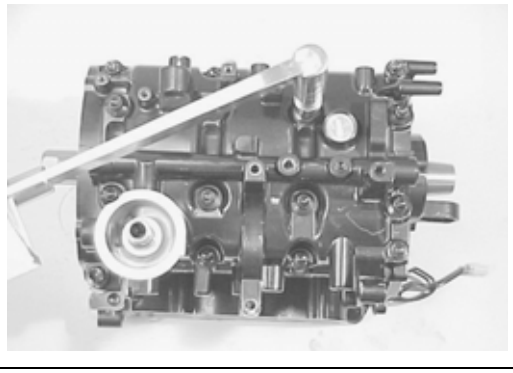

001574

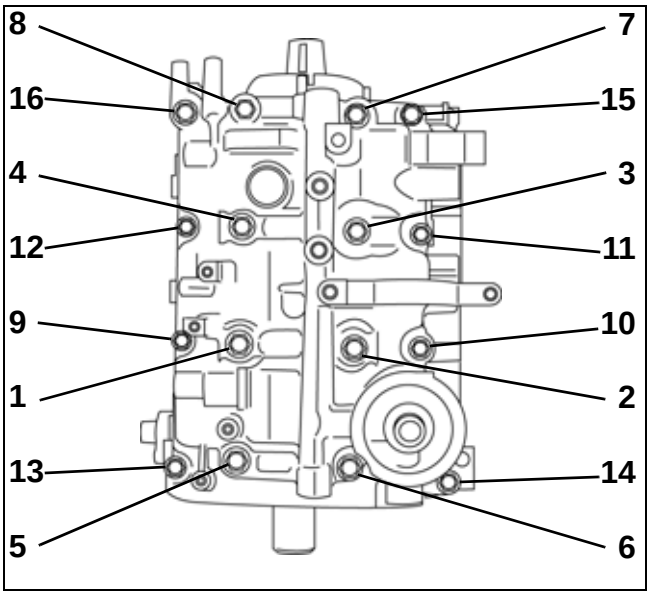

001573

IMPORTANT: After tightening the crankcase bolts, make sure that the crankshaft rotates smoothly when turned by hand.

Install the gasket and the exhaust cover. Install and tighten the bolts securely.

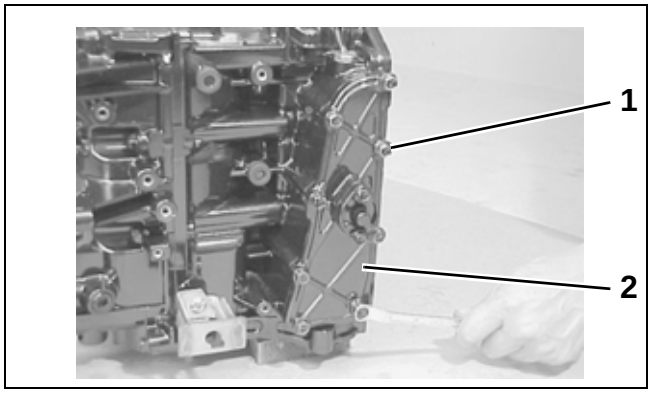

1. Bolts (8)
2. Exhaust cover plate

001531

Install the cylinder head, the timing chain, and the powerhead.

THERMOSTAT

Removal

Disconnect the water hose from the thermostat cover.

Remove four (4) bolts and the thermostat cover.

Remove the gasket and the thermostat.

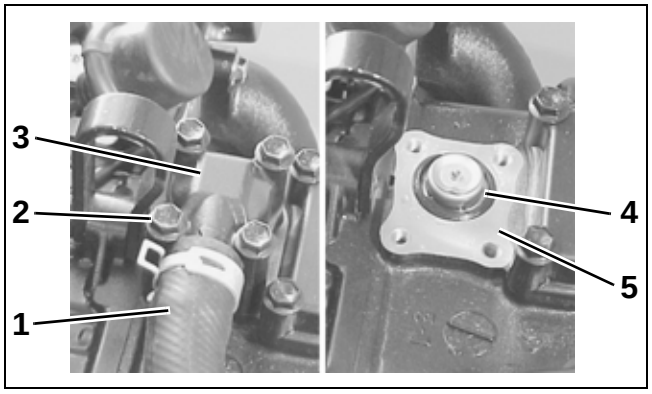

1. *Water hose* 001598
2. *Bolts (4)*
3. *Thermostat cover*
4. *Thermostat*
5. *Gasket*

Inspection

Check the thermostat for salt deposits, corrosion, wear, or other damage.

To check the thermostat opening temperature, insert a length of thread between the thermostat valve and the body and suspend the thermostat in a container filled with water.

Place the thermometer in the container and heat the water. Observe the water temperature when the valve opens and releases the thread.

Thermostat Operating Temperature	
Standard	136 to 144°F (58 to 62°C)

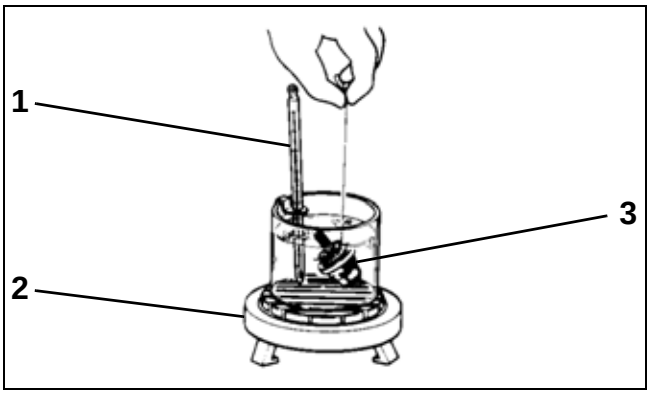

1. *Thermometer* 001600
2. *Heater*
3. *Thermostat*

Installation

Install the gasket and the thermostat.

Install the thermostat cover. Install and tighten the bolts and to a torque of 89 in. lbs. (10 N·m).

Connect the water hose to the thermostat cover.

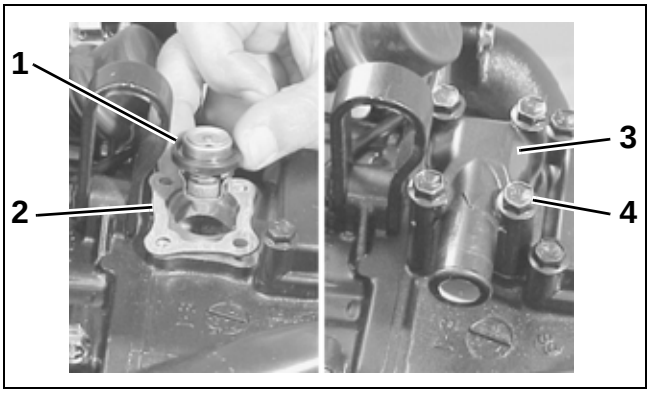

1. *Thermostat* 001601
2. *Gasket*
3. *Thermostat cover*
4. *Bolts (4)*

OPERATION

Water Cooling System

The water cooling system includes the water pump, the water supply tube, the water pressure valve, the powerhead water passages, and the thermostat.

This system cools both the powerhead and the midsection. If overheating occurs, the components of the cooling system must be inspected for blockage, corrosion buildup, or damage.

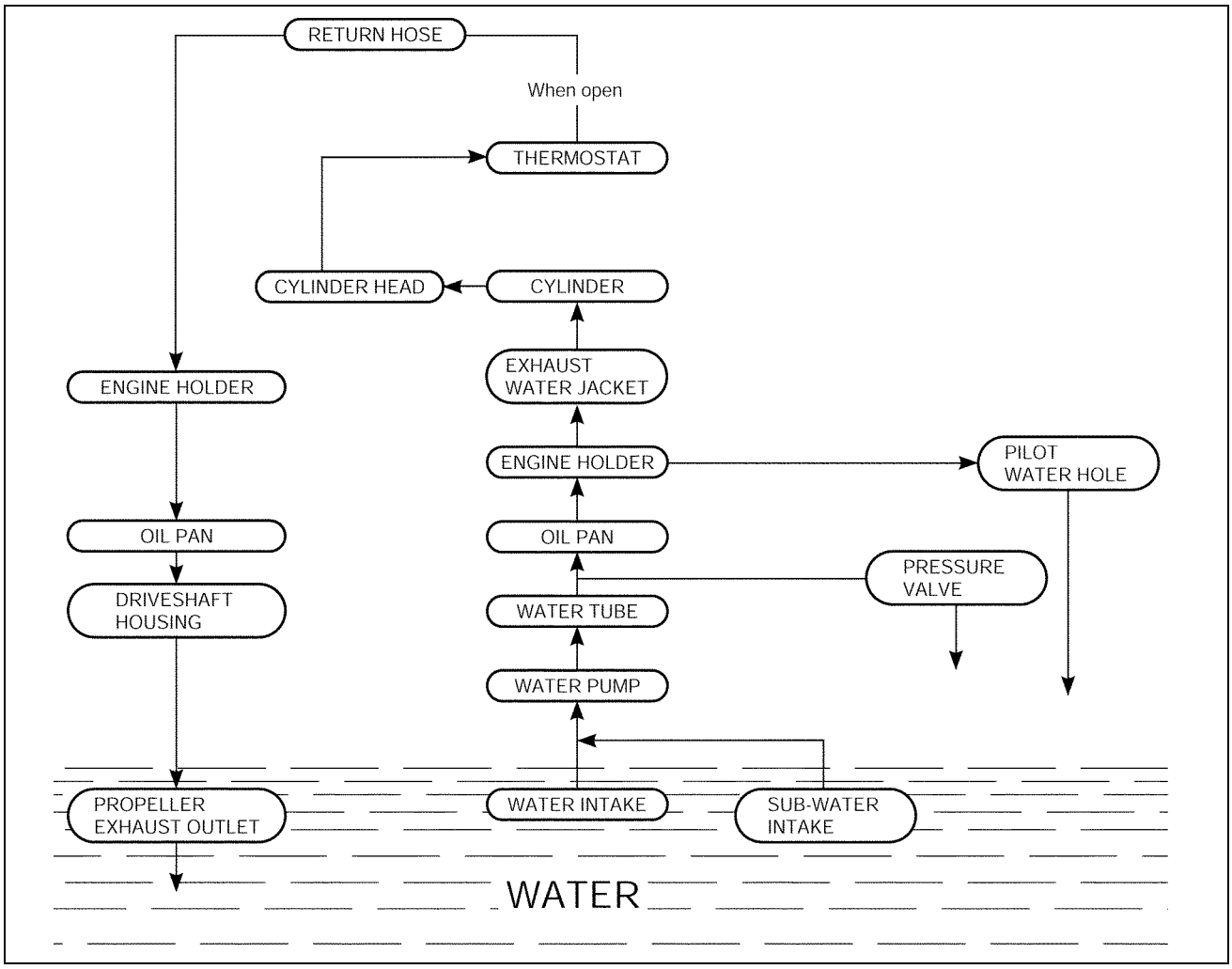

001602

Engine Lubrication System

A camshaft driven, trochoid type pump provides engine oil to all powerhead components requiring lubrication. Oil from the oil pan is drawn though the oil strainer and passed through a spin-on type oil filter before entering the main oil gallery.

A pressure regulator (relief valve) is positioned between the oil pump and the oil filter to maintain the oil pressure at a constant level.

From the main gallery, oil flow is directed either through a drilled internal passage or by the splash method to those surfaces requiring lubrication.

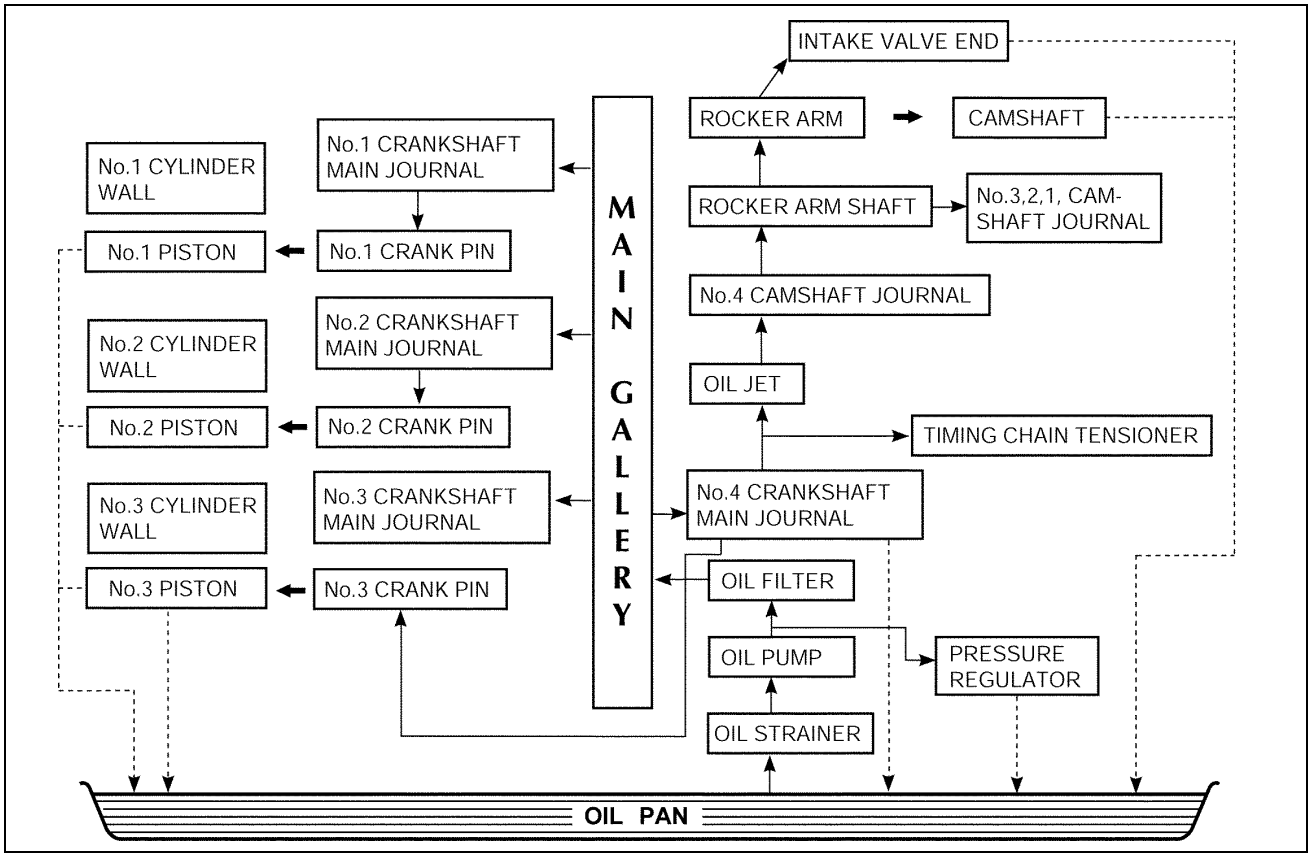

001603

7

NOTES

Technician's Notes

Related Documents

Bulletins	
Instruction Sheets	
Other	

MIDSECTION

TABLE OF CONTENTS

CLEANING AND INSPECTION 174
GENERAL 174
CLAMP SCREW 174
EXHAUST HOUSING 174
STEERING HANDLE 175
REMOVAL 175
INSTALLATION 176
TILT ASSIST CYLINDER 177
REMOVAL 177
INSTALLATION 179
EXHAUST HOUSING AND OIL PAN 181
REMOVAL 181
DISASSEMBLY 182
ASSEMBLY 184
INSTALLATION 187
STERN BRACKETS, STEERING ARM, AND SWIVEL BRACKET 188
REMOVAL 188
INSTALLATION 191
NOTES 194

CLEANING AND INSPECTION

General

WARNING

To avoid personal injury, wear eye protection and set compressed air pressure to less than 25 psi (172 kPa).

- Clean all parts with cleaning solvent and dry with compressed air.
- All nut and screw threads that are coated with *Screw Lock* or *Nut Lock* must be thoroughly cleaned before assembly. When using a thread locking product, prime the threads with *Locquic Primer*.
- Discard all oil seals, O-rings, and gaskets. Use new components during assembly.
- Check all bushings for wear and proper fit. Replace if necessary.
- Inspect the rubber motor mounts. Replace if deteriorated or damaged.
- Inspect the water tube for obstructions or kinks which may restrict water flow. Replace the grommet if worn or damaged.
- Inspect the tilt assist cylinder (or PTT unit) for cracks and other damage. If replacement is necessary, replace the complete cylinder assembly.
- Inspect the stern brackets, swivel bracket, and steering arm for cracks and other damage.
- Inspect the shift components for wear. Replace if deteriorated or damaged.

Clamp Screw

Inspect the clamp screw assembly(s). Replace the swivel plate and retainer if they are bent or loose.

To install a new swivel plate, remove the screw and old plate. Apply *Locquic Primer* to the threads of the screw and allow it to dry for four to five minutes. Then apply *Ultra Lock* to the threads. Install a new swivel plate and tighten the screw securely.

Exhaust Housing

Before checking the exhaust housing for distortion, thoroughly clean the top and bottom mating surfaces and remove all sealer and corrosion.

Check the exhaust housing for distortion. Place the housing on a surface plate. Use a dial indicator to check the flatness by measuring the run-out on the top edge of the housing. The maximum allowable run-out is 0.009 in. (0.228 mm).

If you do not have access to a dial indicator and a surface plate, seek the services of a machine shop. DO NOT attempt to straighten a distorted housing. Replace it.

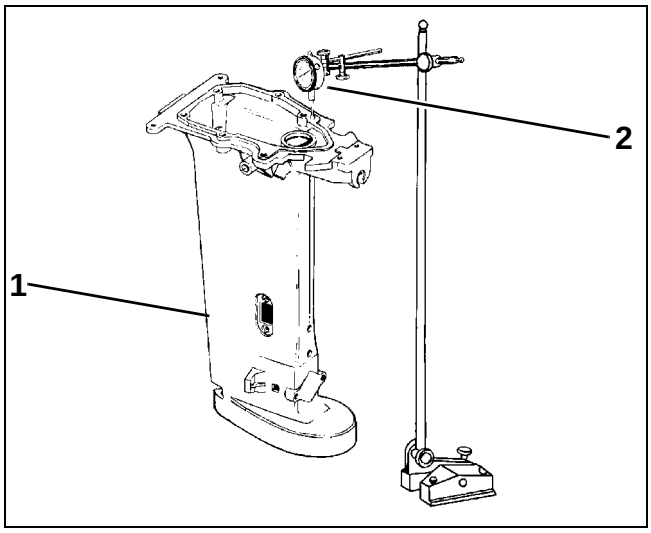

TYPICAL DRC2351
1. *Exhaust housing*
2. *Dial indicator*

IMPORTANT: A bent exhaust housing will cause the upper driveshaft splines to wear excessively and will also damage the crankshaft splines.

STEERING HANDLE

Removal

Remove the starboard side lower cover. Refer to the **MAINTENANCE** section.

Loosen the lock nut and remove the throttle cables from the throttle drum.

Remove the bolt and the plate.

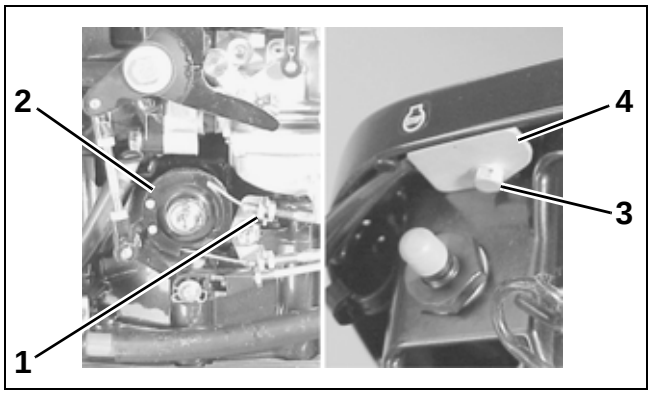

1. *Locknut* 001725
2. *Throttle drum*
3. *Blot*
4. *Plate*

Remove two (2) bolts and the tiller handle cover.

Remove the tiller handle and the throttle cable assembly.

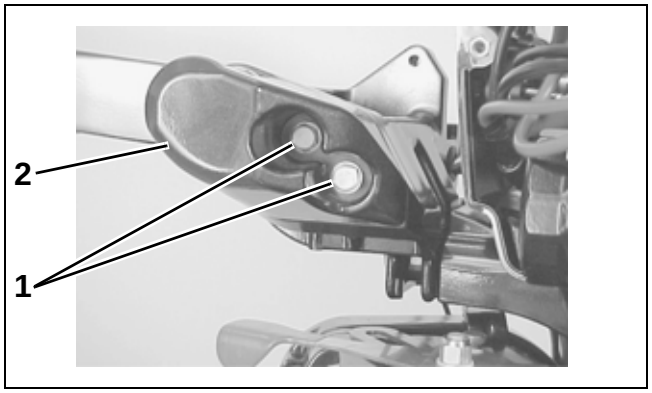

1. *Bolts (2)* 001726
2. *Tiller handle cover*

Disconnect the emergency stop switch lead wire and the engine start button lead wire.

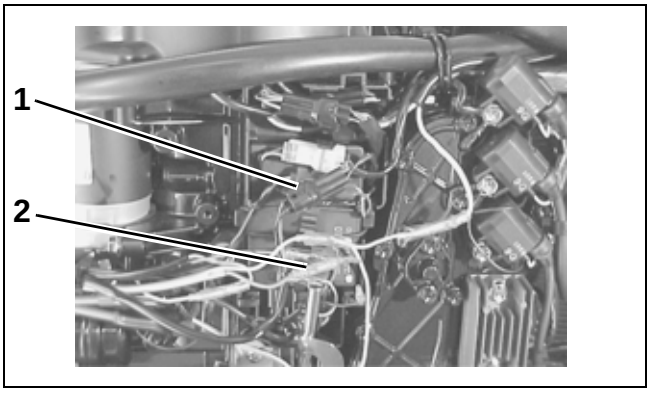

1. *Engine start button lead wire* 001727
2. *Emergency stop switch lead wire*

Remove the cotter pin and the washer, then disconnect the shift lever link from the shift handle.

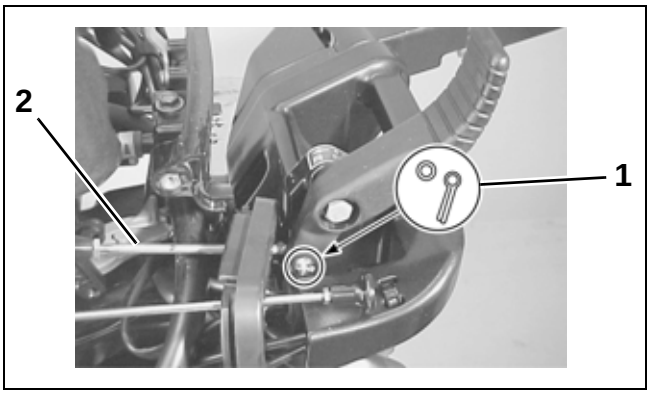

1. *Cotter pin and washer* 001728
2. *Shift lever link*

Remove two (2) bolts and the tiller handle bracket.

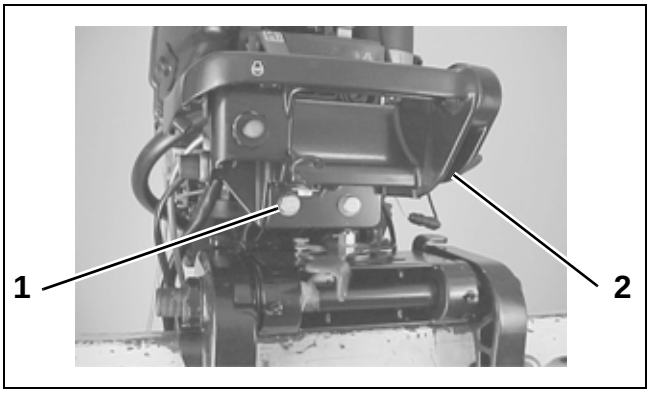

1. *Bolts (2)* 001729
2. *Tiller handle bracket*

Installation

Install the tiller handle bracket. Install and tighten two (2) bolts securely.

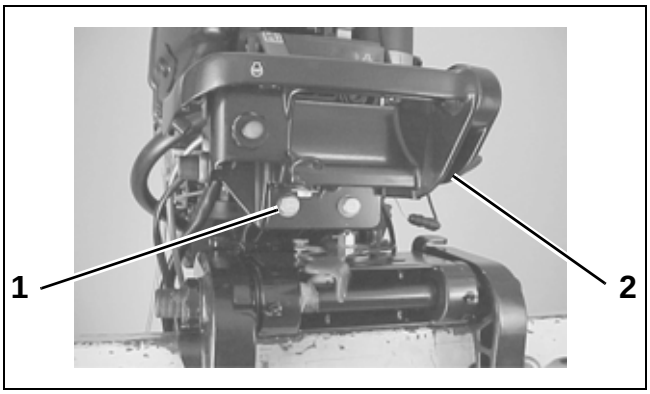

1. *Bolts (2)* 001729
2. *Tiller handle bracket*

Connect the shift lever link to the shift handle by installing the washer and the cotter pin.

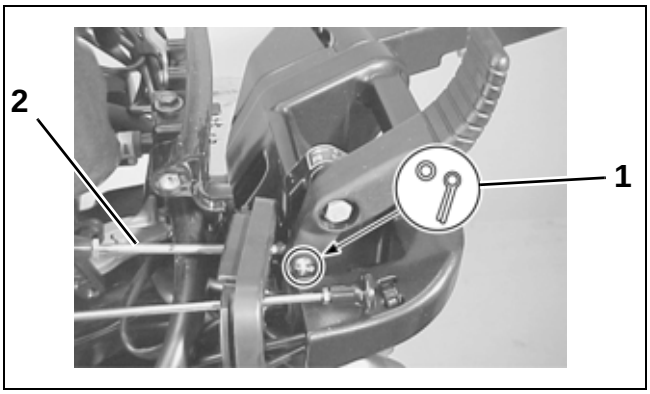

1. *Cotter pin and washer* 001728
2. *Shift lever link*

Connect the emergency stop switch lead wire and the engine start button lead wire.

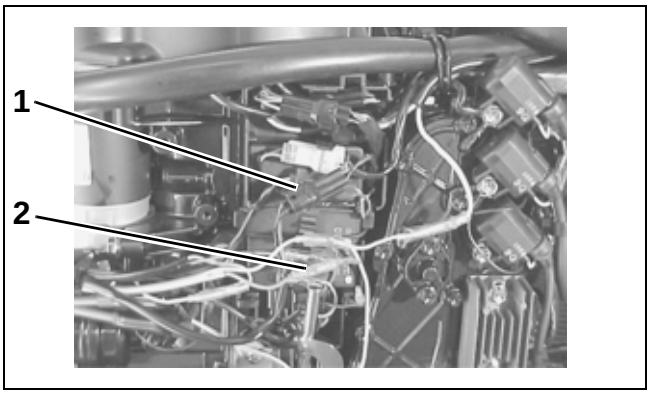

1. *Engine start button lead wire* 001727
2. *Emergency stop switch lead wire*

Install the tiller handle and the throttle cable assembly.

Install the tiller handle cover. Apply *Nut Lock* the the threads of two (2) bolts. Install and tighten the bolts to a torque of 17 ft. lbs. (23 N·m).

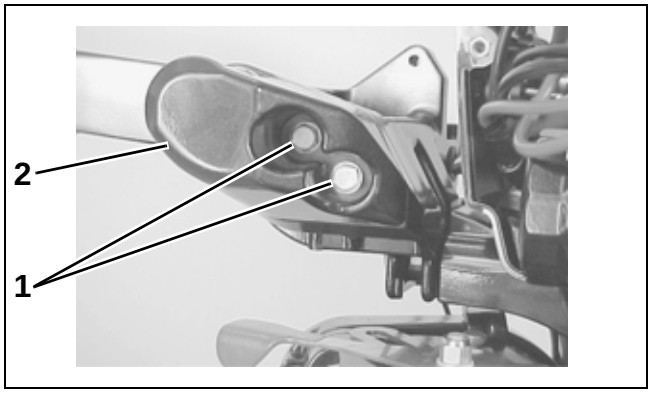

1. *Bolts (2)* 001726
2. *Tiller handle cover*

Install the plate and the bolt.

To connect and adjust the throttle cables, refer to the **FUEL SYSTEM** section.

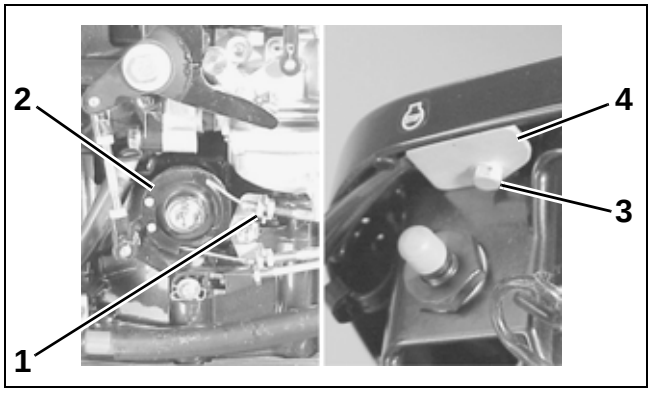

1. *Locknut* 001725
2. *Throttle drum*
3. *Blot*
4. *Plate*

TILT ASSIST CYLINDER

WARNING

The tilt assist cylinder contains high pressure gas. To avoid personal injury, it must not be disassembled, punctured, incinerated, or exposed to heat.

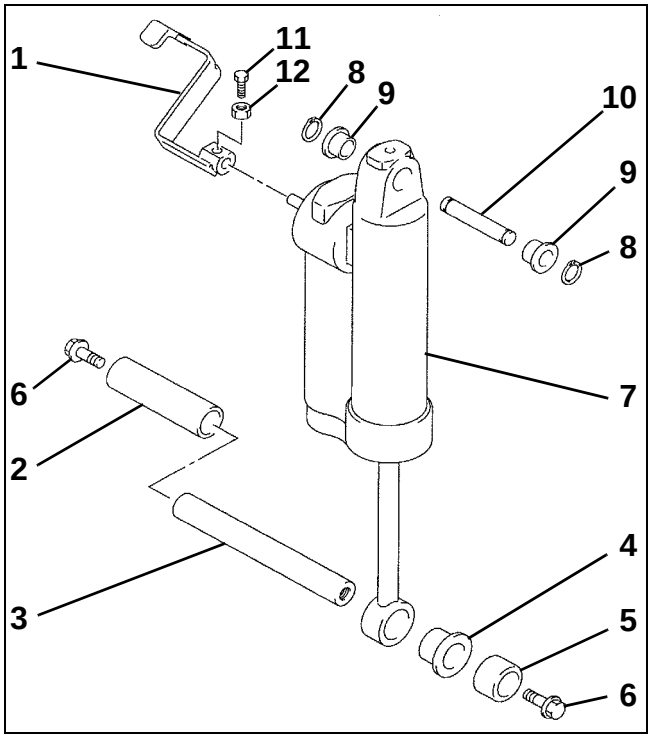

001756

1. *Release lever*
2. *Starboard side tilt shaft spacer*
3. *Tilt rod lower shaft*
4. *Tilt rod lower bushing*
5. *Port side tilt shaft spacer*
6. *Tilt rod shaft bolt (2)*
7. *Title assist cylinder*
8. *Retaining ring*
9. *Tilt shaft upper bushing*
10. *Tilt cylinder upper shaft*
11. *Bolt*
12. *Nut*

Removal

Raise the engine to the full tilt position and lower the manual tilt lock levers.

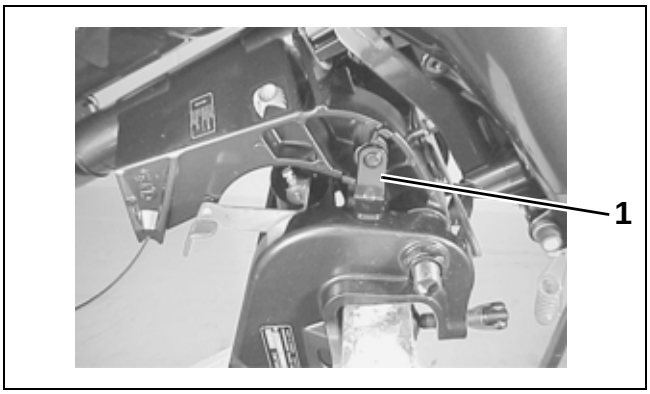

1. *Manual tilt lock lever (2)* 001749

WARNING

During service, the outboard may drop unexpectedly. To avoid personal injury, always support the outboard's weight with a suitable hoist.

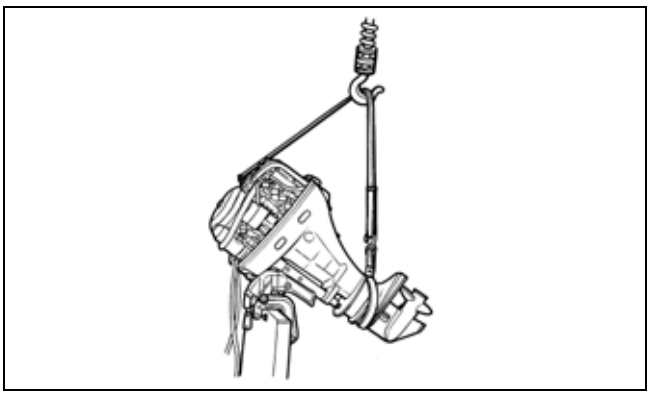

001731

8

WARNING

When removing or installing any type of retaining rings, wear eye protection to avoid personal injury.

Remove the two (2) retaining rings, then push out the tilt cylinder upper shaft and the bushings.

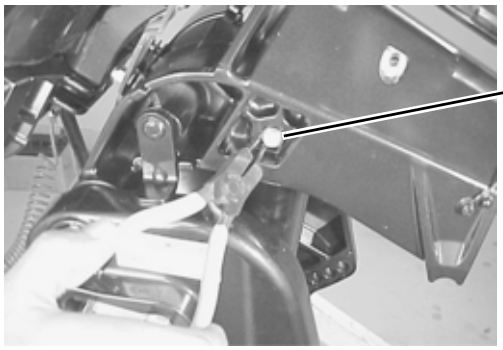

1. Tilt cylinder upper shaft 001750

Remove the two (2) starboard stern bracket nuts and bolts.

Loosen the starboard clamp screw and the tilt tube nut.

IMPORTANT: Complete removal of the tilt tube nut is not required. The nut should only be loosened as far as the end of the shaft threads to facilitate removal of the PTT unit.

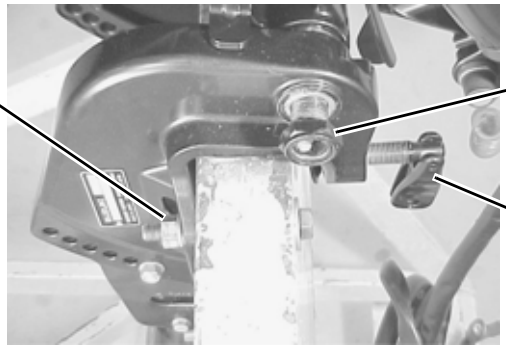

1. Stern bracket nut (2) 001751
2. Starboard clamp screw
3. Tilt tube nut

Remove the tilt cylinder lower shaft bolts.

1. Tilt rod lower shaft bolt (2) 001752

Slide the starboard stern bracket fully outward to the right side. Remove the tilt assist cylinder, the lower shaft, the bushing, and the spacers from between the stern brackets.

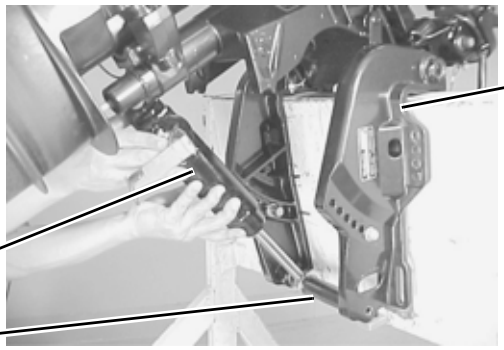

1. Starboard stern bracket 001753
2. Tilt assist cylinder
3. Lower shaft

If necessary, loosen the locknut, then remove the bolt and the release lever.

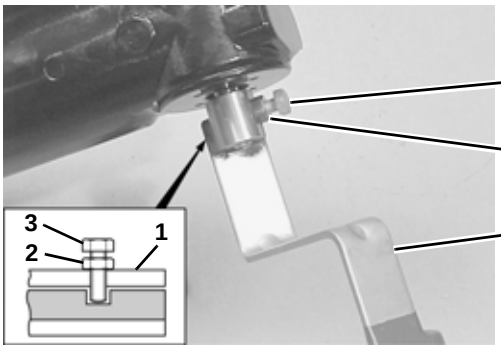

1. Release lever 001757
2. Locknut
3. Bolt

Installation

If removed, install the release lever, the bolt, and the locknut as shown. Tighten the bolt and the locknut securely.

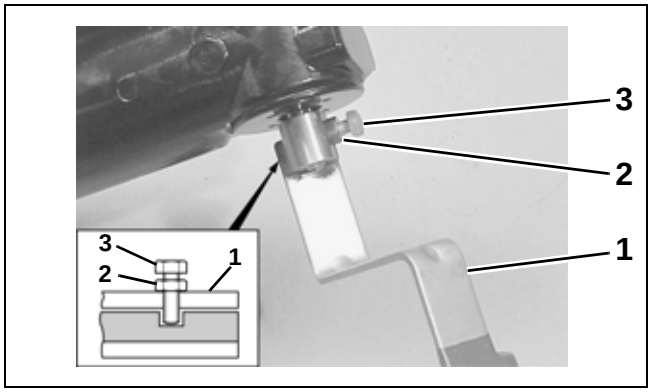

1. *Release lever* 001757
2. *Locknut*
3. *Bolt*

Apply *Triple-Guard* grease to the lower bushing and the tilt cylinder lower shaft.

Install the bushings, the lower shaft, and the spacers to the tilt assist cylinder.

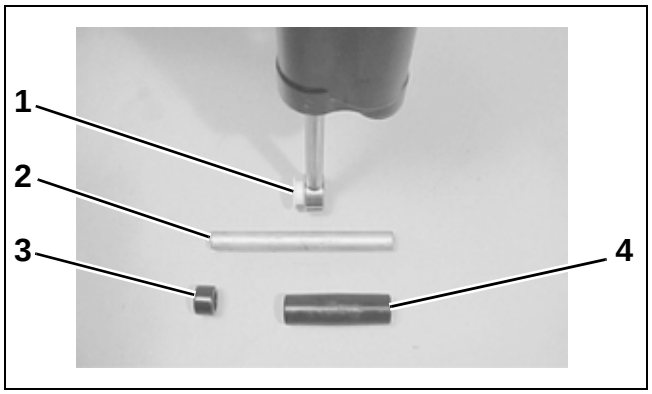

1. *Bushing* 001758
2. *Tilt cylinder lower shaft*
3. *Port side tilt shaft spacer*
4. *Starboard side tilt shaft spacer*

Place the tilt assist cylinder and lower shaft in position between the stern brackets.

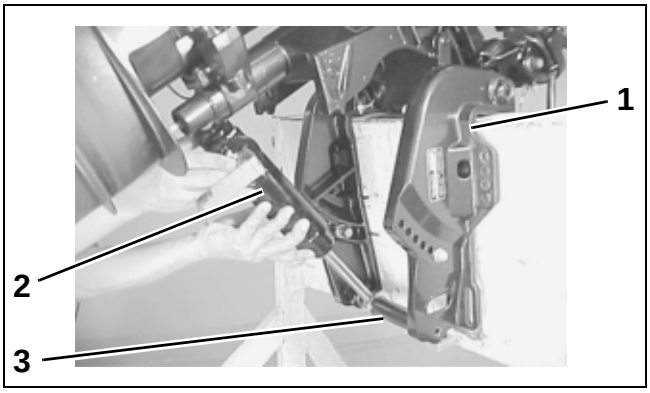

1. *Starboard stern bracket* 001753
2. *Tilt assist cylinder*
3. *Lower shaft*

Tighten the tilt tube nut to a torque of 32 ft. lbs. (43 N·m).

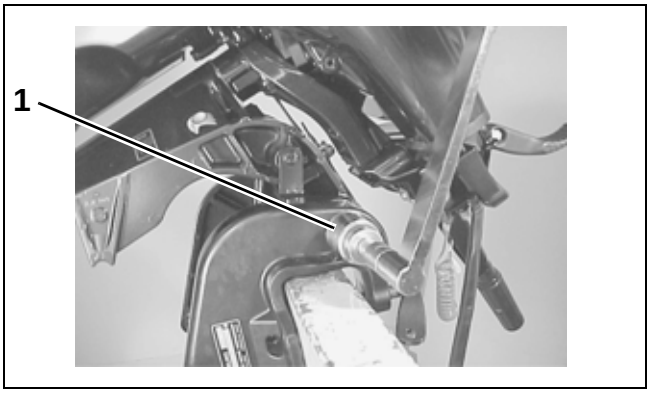

1. *Clamp bracket shaft nut* 001759

Apply *Nut Lock* to the threads of the tilt rod lower shaft bolts. Install and tighten the bolts to a torque of 17 ft. lbs. (23 N·m).

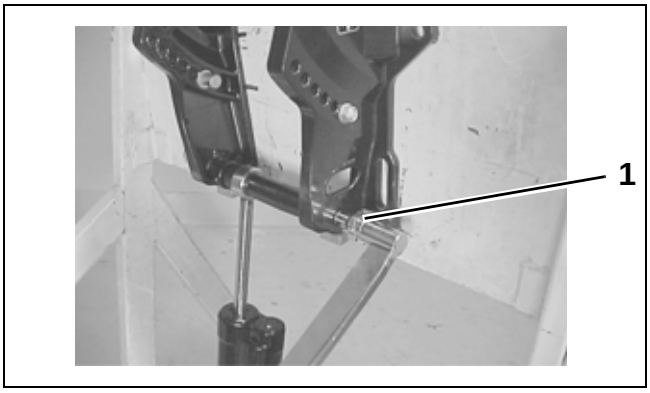

1. *Tilt rod lower shaft bolt (2)* 001760

Apply *Triple-Guard* grease to the tilt shaft upper bushings, then install the bushing in the tilt assist cylinder as shown.

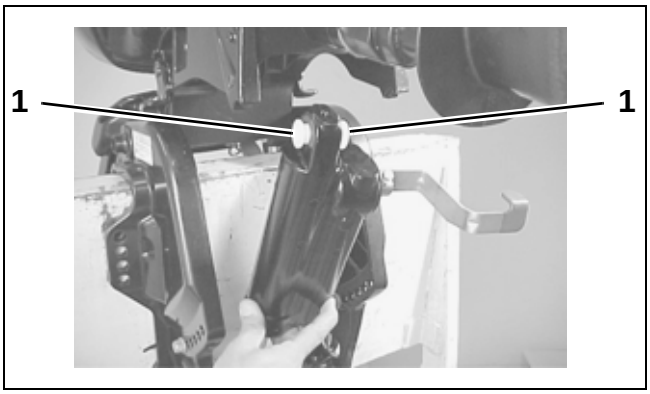

1. Tilt shaft upper bushings (2) 001761

Apply *Triple-Guard* grease to tilt cylinder upper shaft. Align the upper eyelet of the tilt assist cylinder with the hole in the swivel bracket, then insert the upper shaft. Secure the upper shaft with two (2) retaining rings.

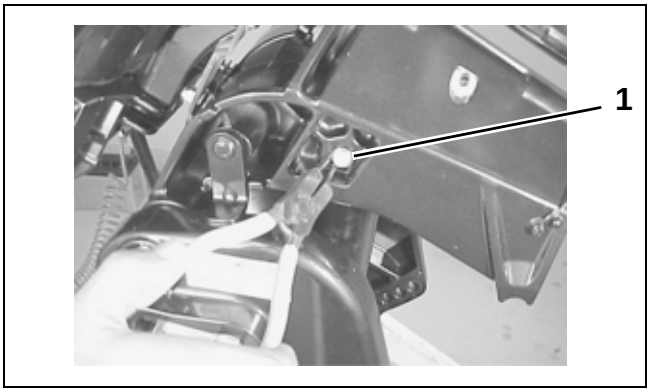

1. Tilt cylinder upper shaft 001750

Install the two (2) bolts and the starboard stern bracket nuts. Tighten the starboard clamp screw.

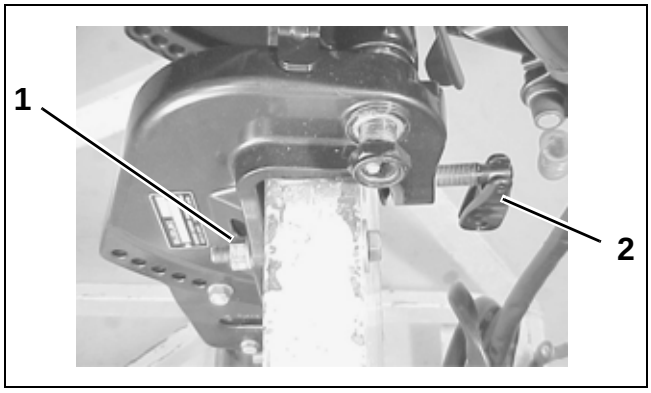

1. Stern bracket nut (2) 001751
2. Starboard clamp screw

EXHAUST HOUSING AND OIL PAN

Removal

Remove the powerhead. Refer to the **POWERHEAD** section.

Remove the gearcase. Refer to the **GEARCASE** section.

Remove the screw and the bonding wire from the exhaust housing.

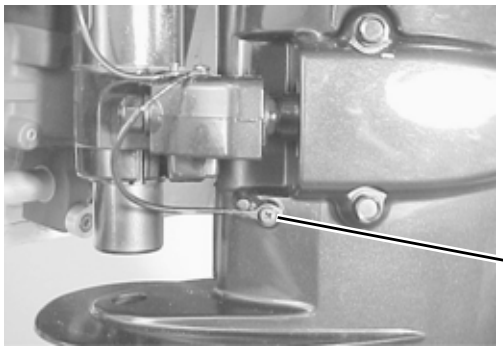

1. Bonding wire 001762

Unscrew the bolts and remove the lower mount covers from the starboard and port sides.

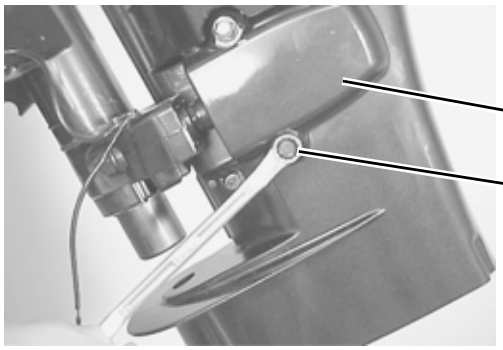

1. Bolts 001763
2. Lower mount cover (2)

Remove two (2) lower mount nuts and washers.

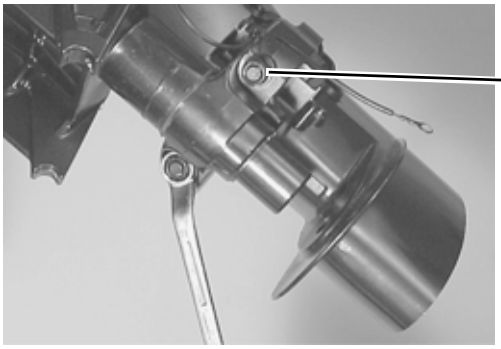

1. Lower mount nuts (2) 001764

Remove two (2) upper mount nuts and washers.

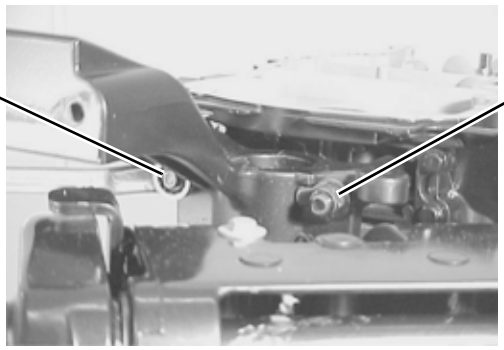

1. Upper mount bolts (2) 001765

Remove the exhaust housing and oil pan from the steering bracket.

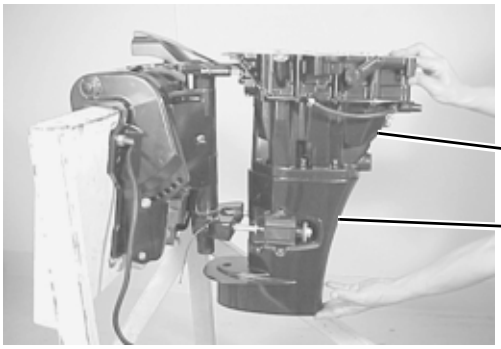

1. Exhaust housing 001766
2. Oil pan

Disassembly

Remove three (3) bolts and the upper mount assembly (starboard and port sides).

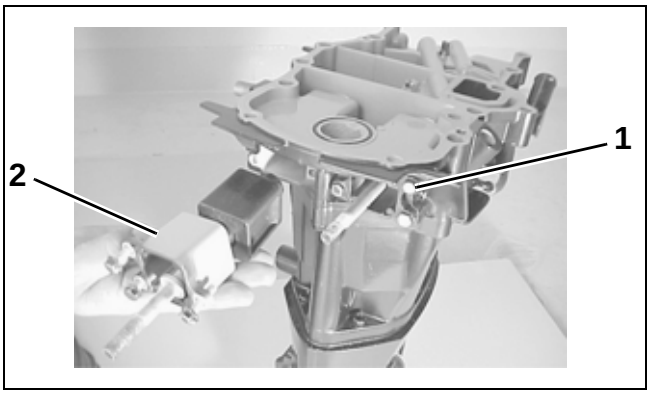

1. *Bolts (3)* 001767
2. *Upper mount assembly*

Remove both lower mount assemblies.

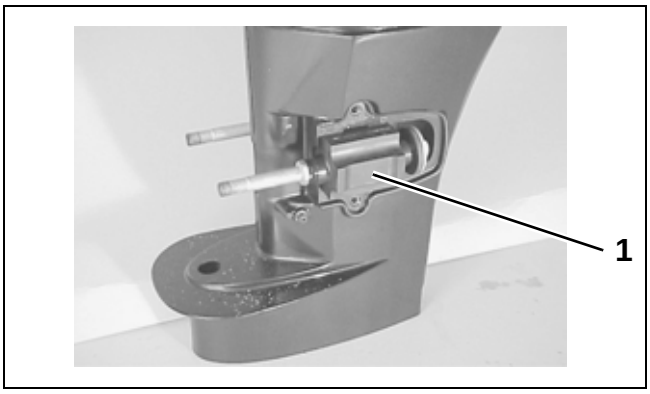

1. *Lower mount assembly (2)* 001768

If necessary, disassemble the lower mounts by removing the nut, the washer, the lower mount stop, and the lower mount from the bolt.

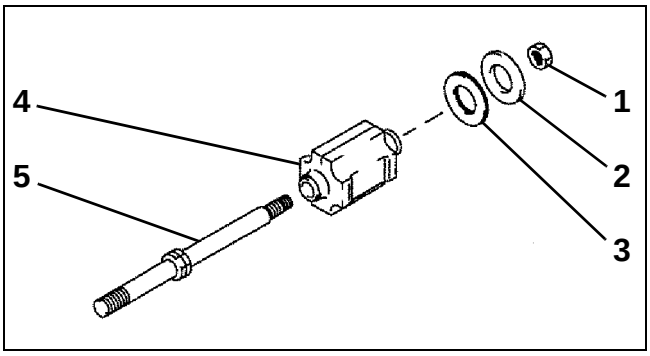

1. *Nut* 001778
2. *Washer*
3. *Lower mount stop*
4. *Lower mount*
5. *Bolt*

Remove four (4) bolts and the engine holder from the top of the oil pan.

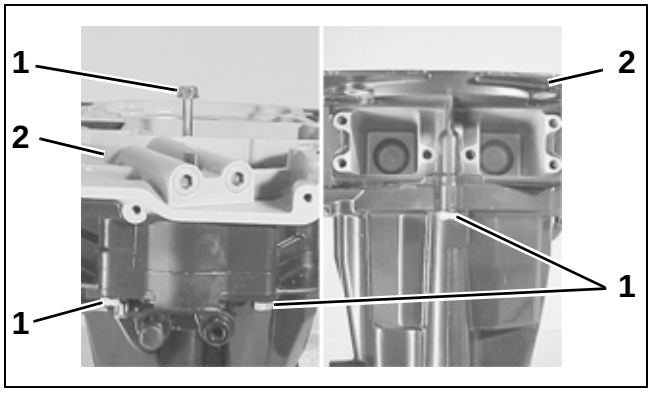

1. *Bolts (4)* 001769
2. *Engine holder*

Remove two (2) bolts and the oil strainer. Note the position of the O-ring on the strainer, then remove the O-ring.

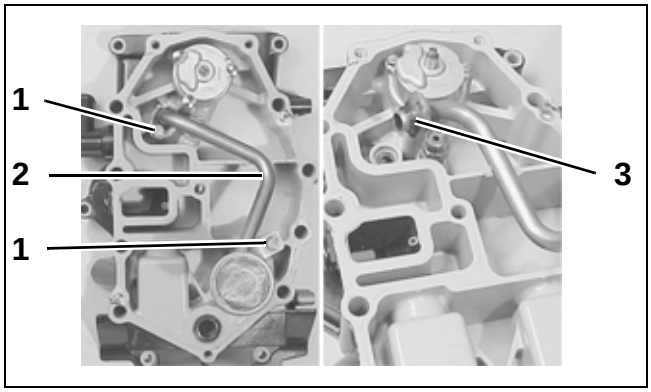

1. *Bolts (2)* 001770
2. *Oil strainer*
3. *O-ring*

Remove three (3) bolts and the oil pump assembly.

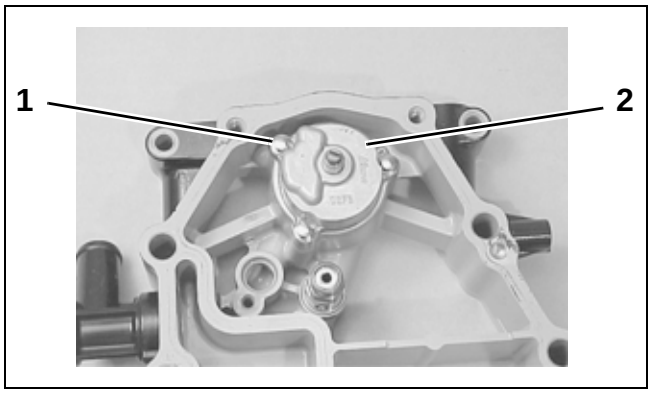

1. *Bolts (3)* 001771
2. *Oil pump assembly*

Remove the oil relief valve.

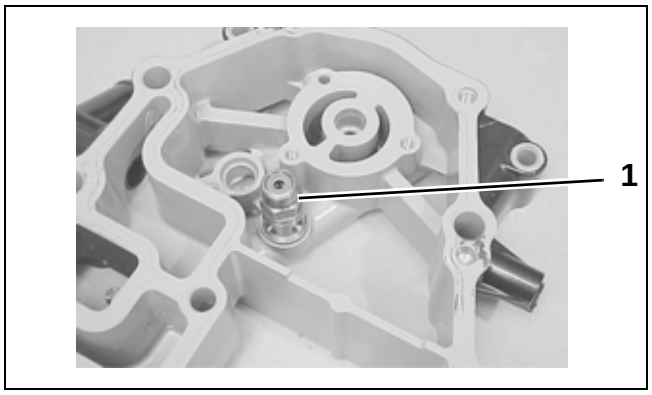

1. Oil relief valve 001772

Use an oil seal remover to remove the driveshaft oil seal from the engine holder.

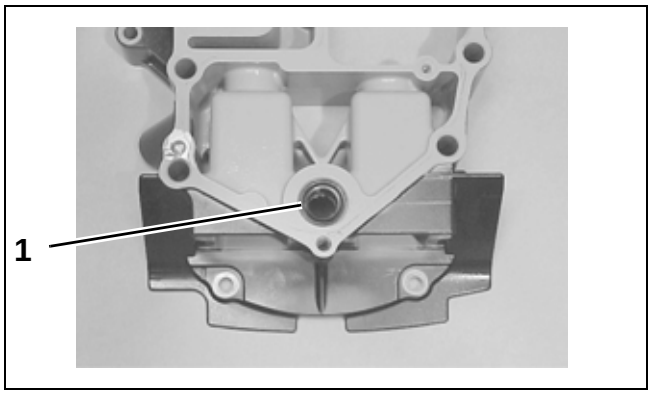

1. Oil seal 001780

Remove six (6) bolts. Separate the oil pan from the exhaust housing.

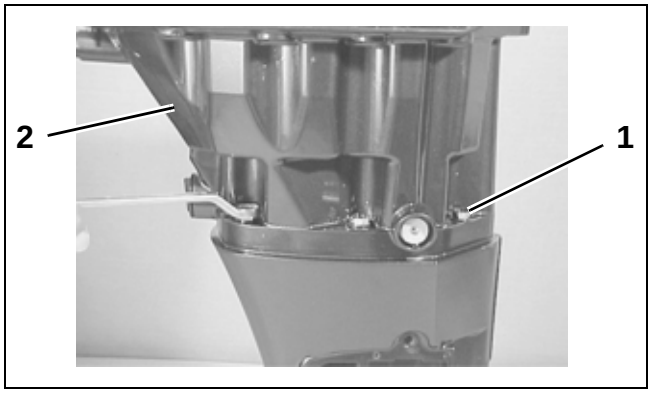

1. Bolts (6) 001773
2. Oil pan

Remove the water tube from the exhaust housing.

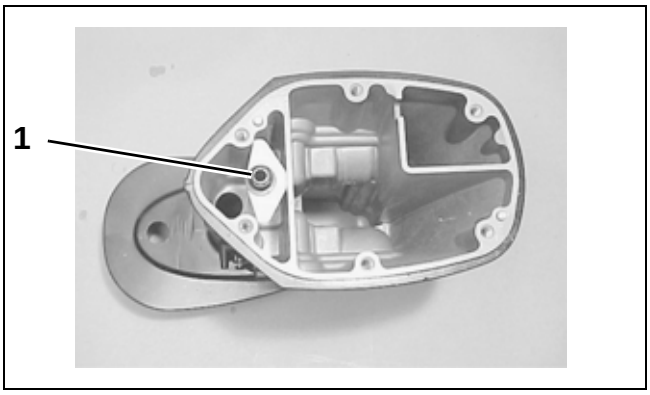

1. Water tube 001774

Remove two (2) bolts, the valve cover, and the water pressure valve.

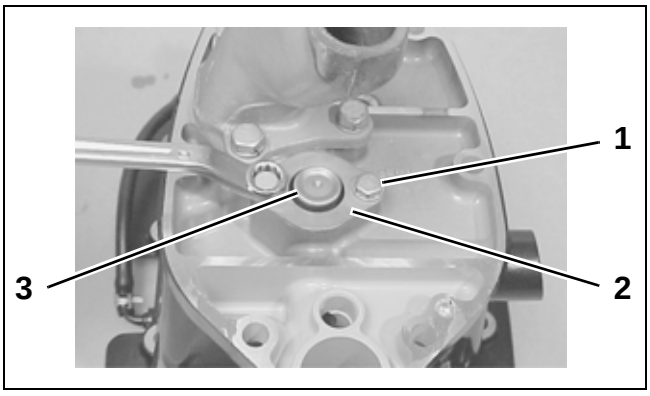

1. Bolts (2) 001775
2. Valve cover
3. Water pressure valve

Remove three (3) bolts and the exhaust tube.

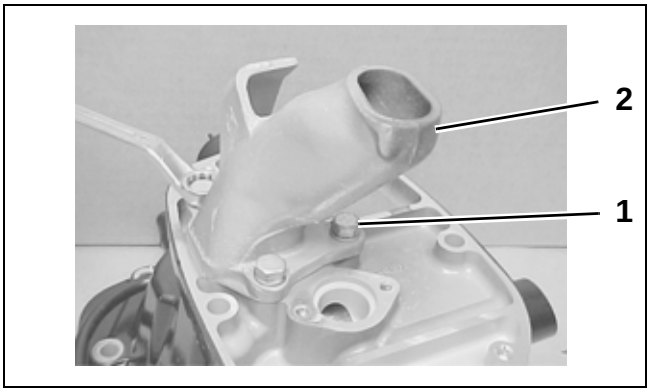

1. Bolts (3) 001776
2. Exhaust tube

Assembly

Use an oil seal installer to install a **new** driveshaft oil seal in the engine holder. Make sure that the lip of the oil seal is facing downward.

After installation, apply *Triple-Guard* grease to the oil seal lip.

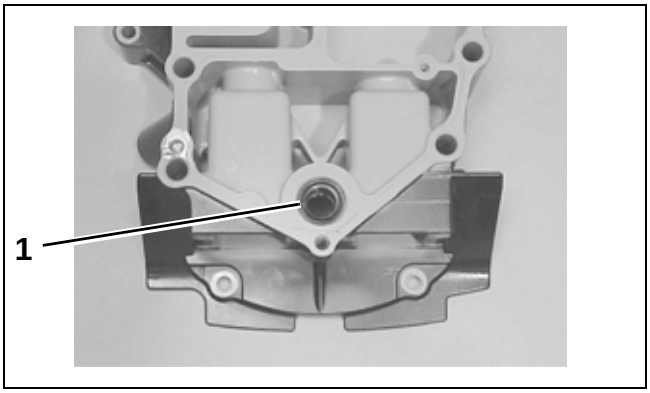

1. Oil seal 001780

Install the water tube in the exhaust housing.

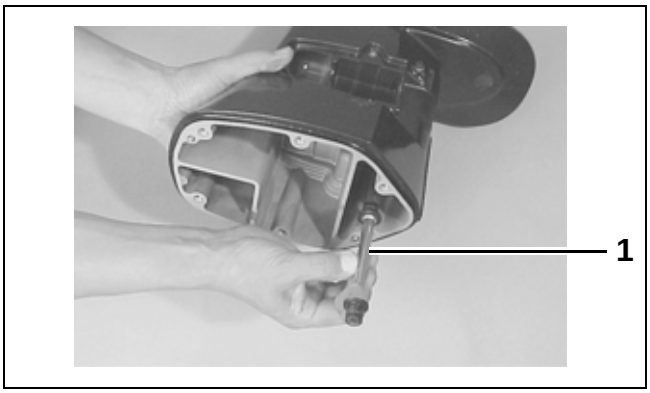

1. Water tube 001785

Install the water pressure valve and the valve cover. Install and tighten the bolts securely.

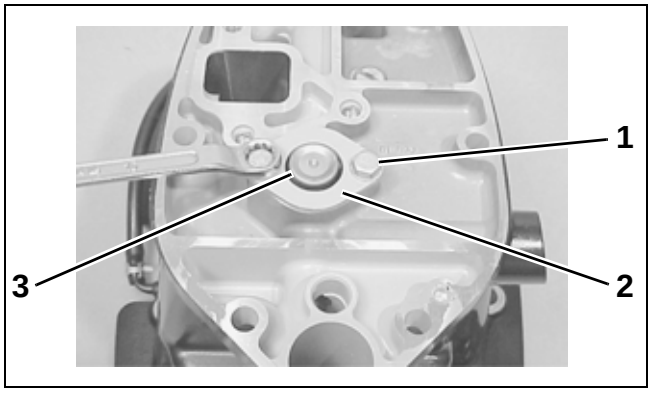

1. Bolts (2) 001775
2. Valve cover
3. Water pressure valve

Install a **new** gasket and the exhaust tube. Install and tighten the bolts securely.

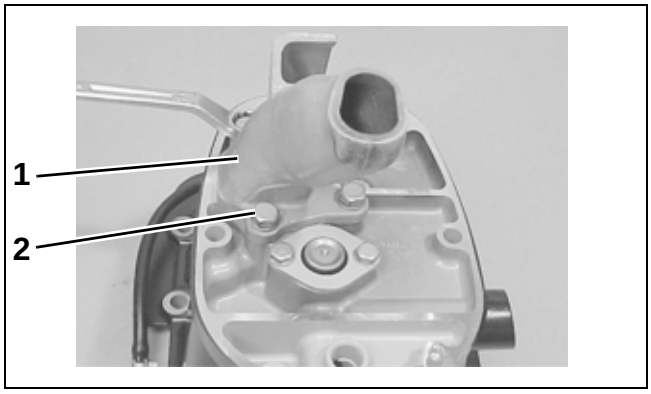

1. Exhaust tube 001786
2. Bolts (3)

Install two (2) dowel pins to the exhaust housing.

Apply *Gasket Sealing Compound* to the mating surfaces of the exhaust housing and the oil pan.

Install the oil pan to the exhaust housing. Install and tighten six (6) bolts securely.

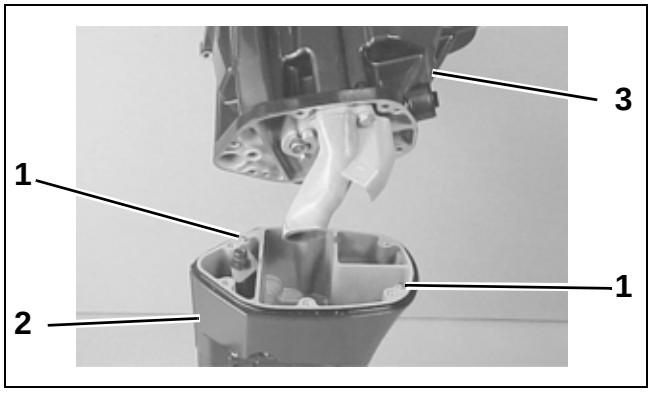

1. *Dowel pins (2)*
2. *Exhaust housing*
3. *Oil pan*

001787

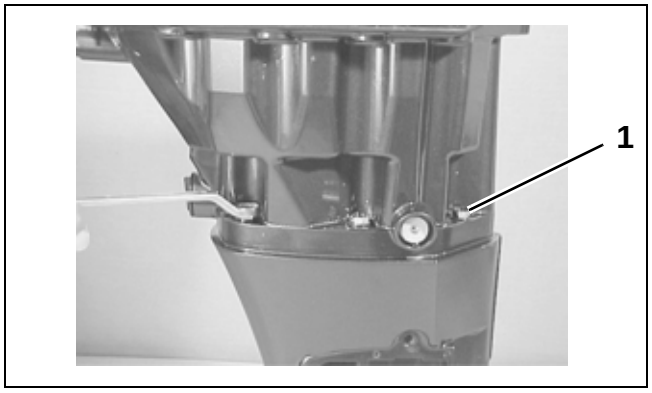

1. *Bolts (6)*

001773

Install a **new** gasket and the oil relief valve to the engine holder. Tighten the relief valve to a torque of 20 ft. lbs. (27 N·m).

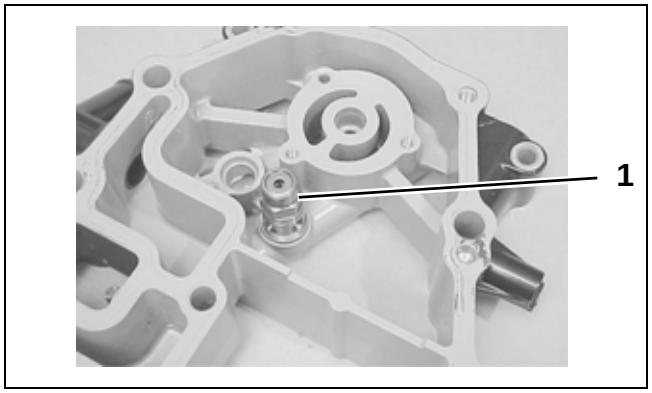

1. *Oil relief valve*

001772

Apply engine oil to a **new** O-ring, then install the O-ring on the oil strainer.

Install the oil strainer to the engine holder. Install and tighten the bolts securely.

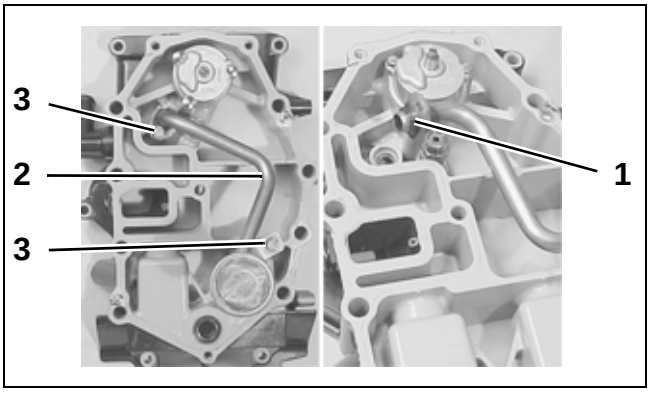

1. *O-ring*
2. *Oil strainer*
3. *Bolts (2)*

001770

Apply engine oil to a **new** seal, then install the seal on the oil pump.

Install the oil pump to the engine holder. Install and tighten the bolts securely.

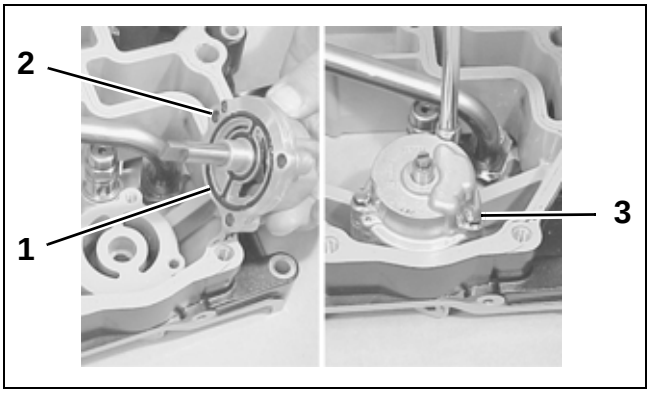

1. *Seal*
2. *Oil pump*
3. *Bolts (3)*

001788

Install two (2) dowel pins and a **new** gasket on the oil pan.

Install the engine holder to the oil pan.

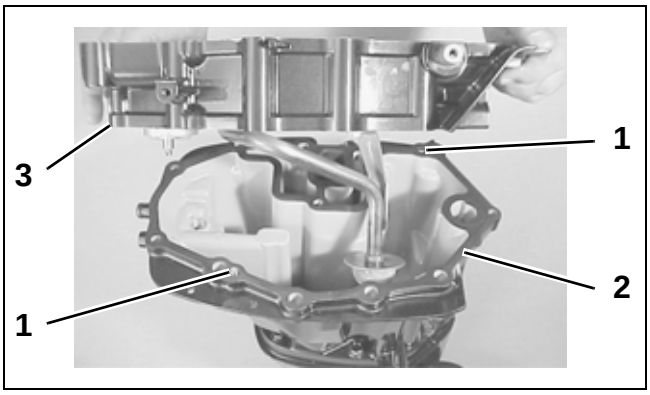

1. Dowel pins (2)
2. Gasket
3. Engine holder
001789

Install and tighten four (4) bolts to a torque of 17 ft. lbs. (23 N·m).

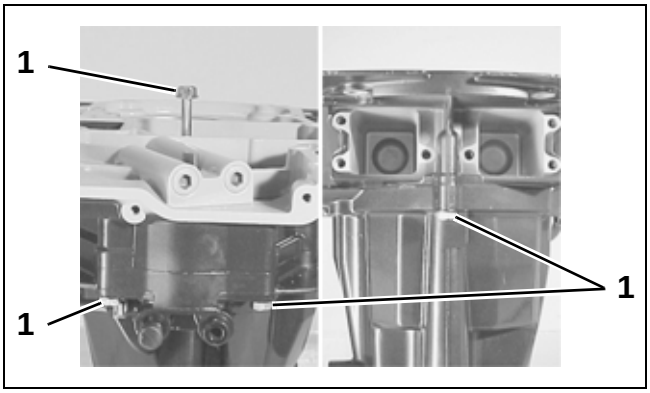

1. Bolts (4)
001769

Install both upper mount assemblies to the engine holder. Make sure that the arrow on the upper mount is pointing upward.

Apply *Nut Lock* to three (3) bolts. Install and tighten the bolts to a torque of 88 in. lbs. (10 N·m).

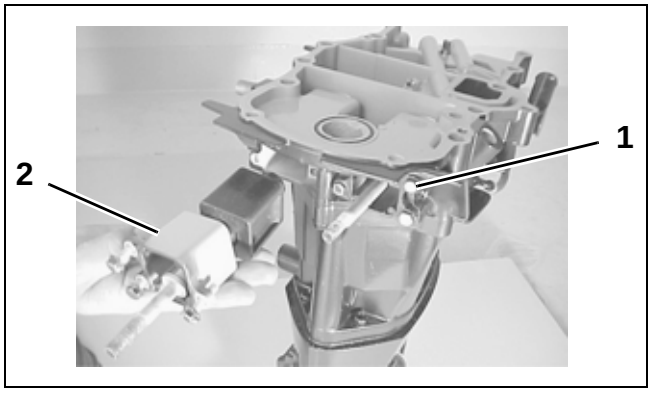

1. Bolts (3)
2. Upper mount assembly
001767

If the lower mounts are disassembled, place the washer, the damper, and the lower mount on the bolt. Apply *Nut Lock* to the threads of the lower mount rear nut. Install and tighten the nut to a torque of 29 ft. lbs. (40 N·m).

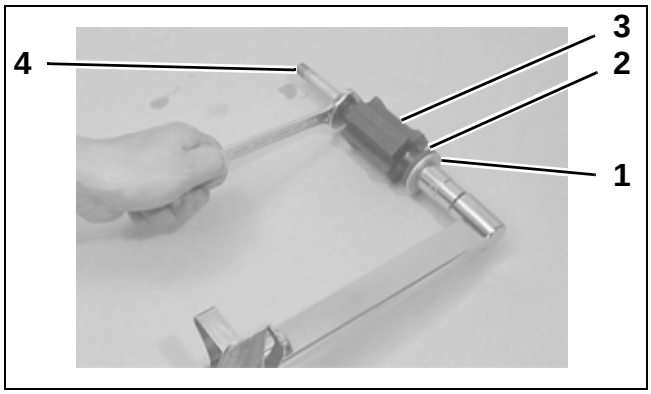

1. Washer
2. Damper
3. Lower mount
4. Lower mount bolt
001790

Install the lower mounts and the covers on the exhaust housing. Make sure that the arrow on the lower mount is pointing upward.

At this time, tighten the bolts only finger tight to temporarily hold the covers in place.

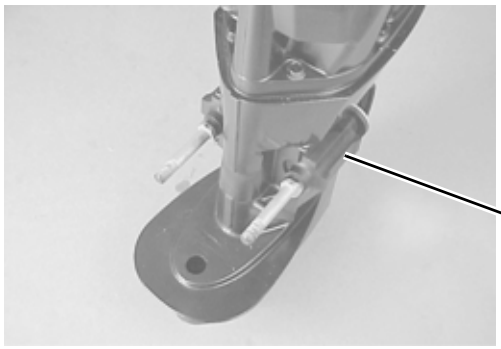

1. Lower mount (2) 001791

Installation

Install the exhaust housing and oil pan to the steering bracket.

IMPORTANT: When installing the exhaust housing / oil pan assembly, be sure lower mount hex head bolt properly fits into the lower mount bracket groove.

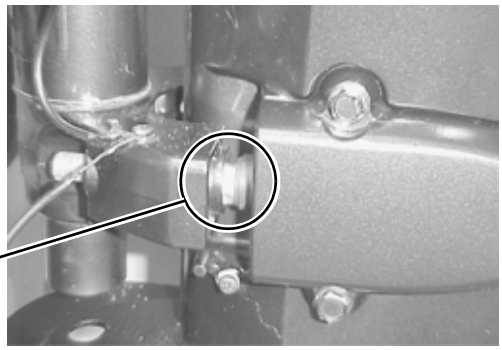

1. Hex head bolt in groove 001792

Apply *Nut Lock* to the threads of the upper mount nuts. Install and tighten the upper mount nuts to a torque of 26 ft. lbs. (35 N·m).

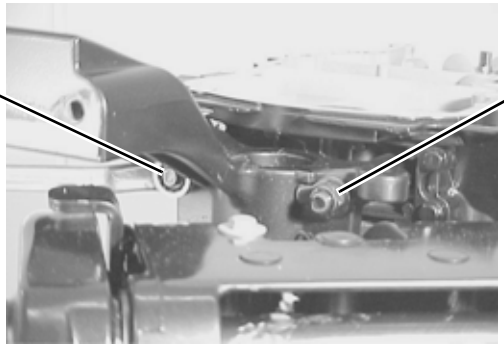

1. Upper mount bolts (2) 001765

Tighten the bolts for both lower mount covers securely.

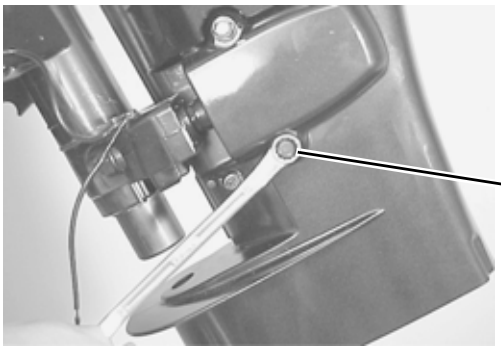

1. Bolts (2) 001763

Apply *Nut Lock* to the threads of the lower mount front nuts. Install and tighten the lower mount front nuts to a torque of 44 ft. lbs. (60 N·m).

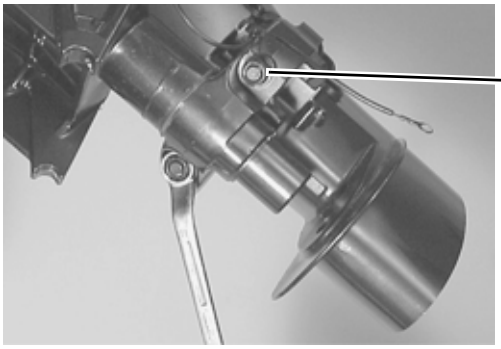

1. Lower mount nuts (2) 001764

IMPORTANT: An insulation washer must be installed between the bonding wire terminal and the exhaust housing.

Attach the bonding wire to the exhaust housing. Tighten the screw securely.

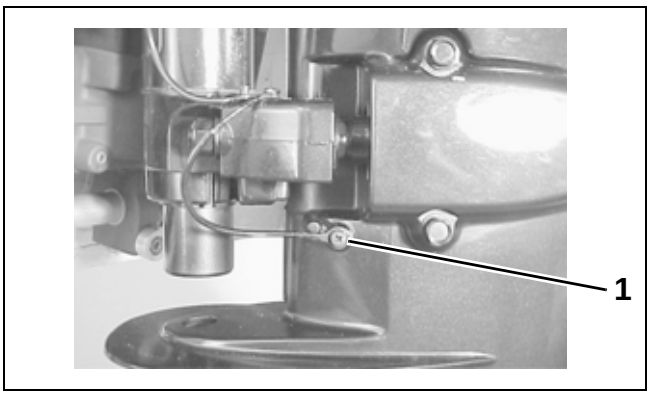

1. Bonding wire 001762

STERN BRACKETS, STEERING ARM, AND SWIVEL BRACKET

Removal

Remove the exhaust housing and the oil pan. Refer to “EXHAUST HOUSING AND OIL PAN” on page 181.

Remove the screws and the bonding wires from the stern bracket and the lower mount bracket.

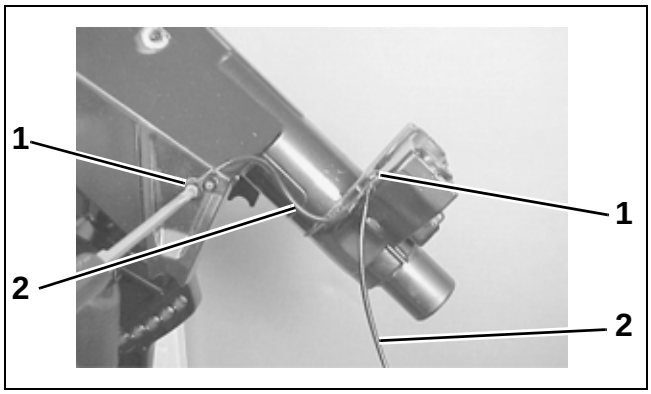

1. Screws 001793
2. Bonding wires

IMPORTANT: Before removing the lower mount bracket, use sandpaper to tear the black paint off the lower portion of the pilot shaft for easier removal.

Remove the retaining ring, then slide the lower mount bracket from the steering shaft. Remove the key, the shim, and the washer.

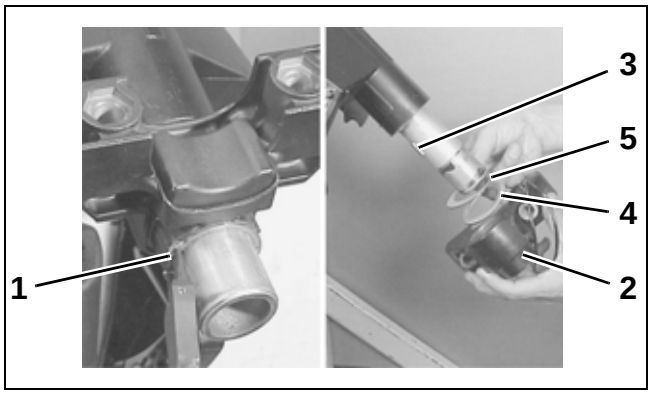

1. *Retaining ring* 001794
2. *Lower mount bracket*
3. *Key*
4. *Shim*
5. *Washer*

Tiller handle models only: Remove the bolt that secures the steering adjuster plate to the steering bracket.

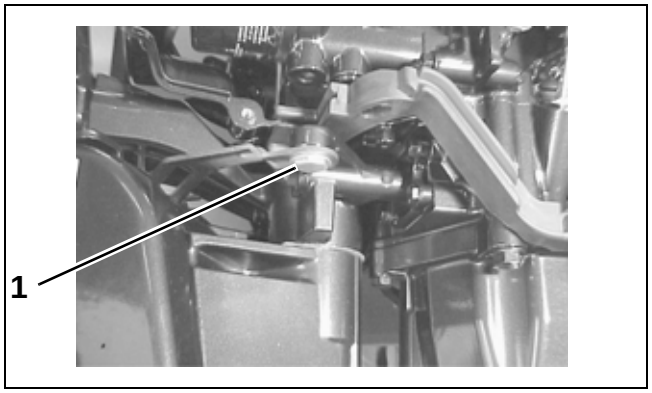

1. *Bolt* 001795

Remove the steering adjuster bolt, the cover, the washer, and the spring.

Lift the steering arm upward to remove it from the swivel bracket.

Remove the washer, the plate, the upper bushing, and the steering adjuster from the steering arm.

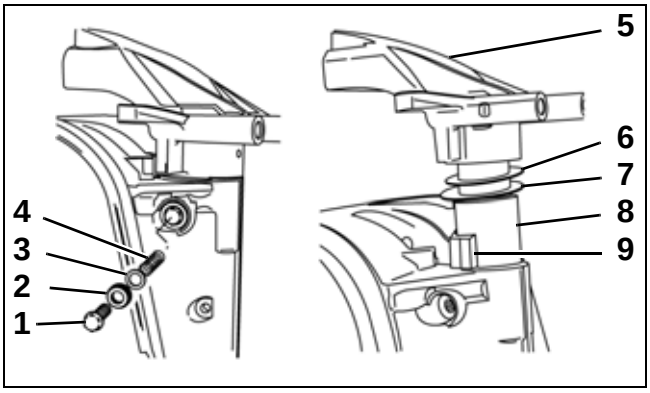

1. *Steering adjuster bolt* 001796
2. *Cover*
3. *Washer*
4. *Spring*
5. *Steering arm*
6. *Washer*
7. *Plate*
8. *Upper bushing*
9. *Steering adjuster*

Remove the steering arm seal and the lower bushing.

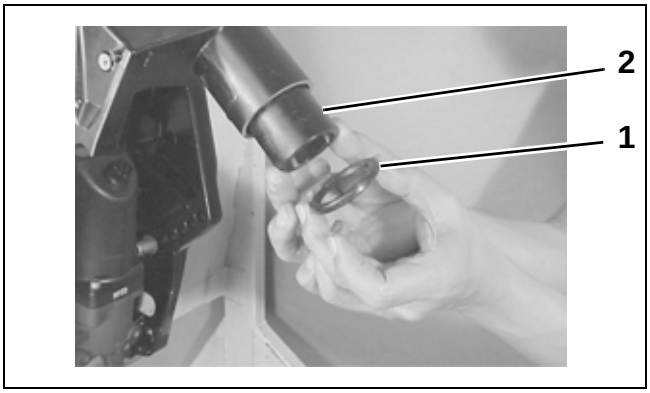

1. *Steering arm seal* 001797
2. *Lower bushing*

Remove the retaining ring and push out the tilt cylinder upper rod.

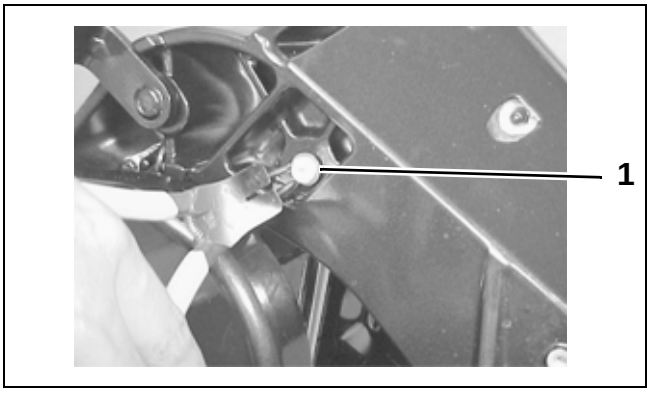

1. Tilt cylinder upper rod 001798

Remove the tilt tube nut from the stern bracket.

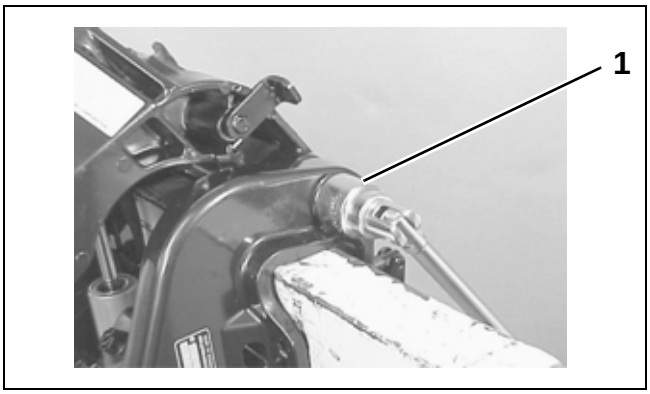

1. Tilt tube nut 001799

Remove the lower shaft bolts. Slide the stern bracket off the shaft.

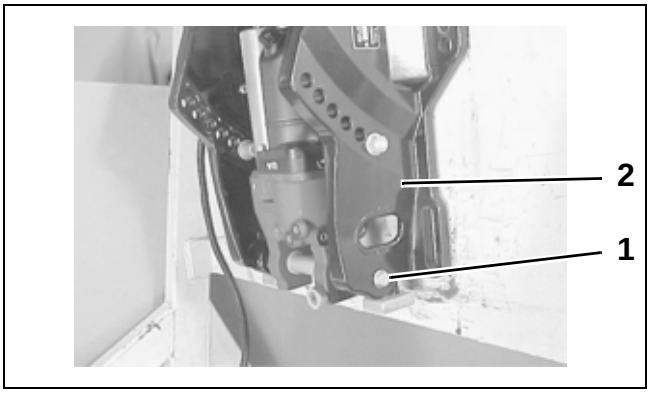

1. Lower shaft bolts (2) 001800
2. Stern bracket

Remove the PTT unit (or tilt assist cylinder).

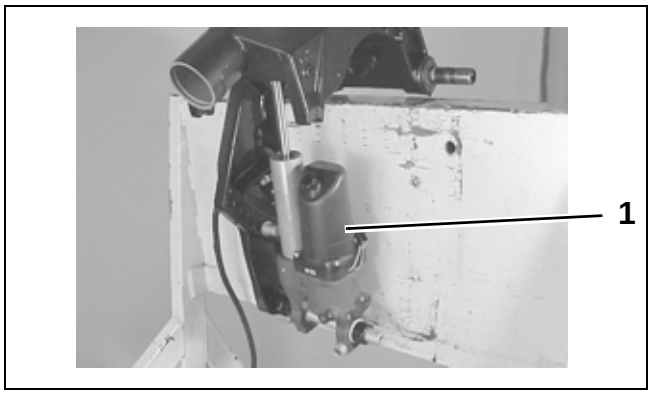

1. PTT unit (or tilt assist cylinder) 001801

Remove the bonding wire from the port side stern bracket. Pull the stern bracket outward to remove it and the tilt tube from the swivel bracket. Remove the bushings from each side of the swivel bracket.

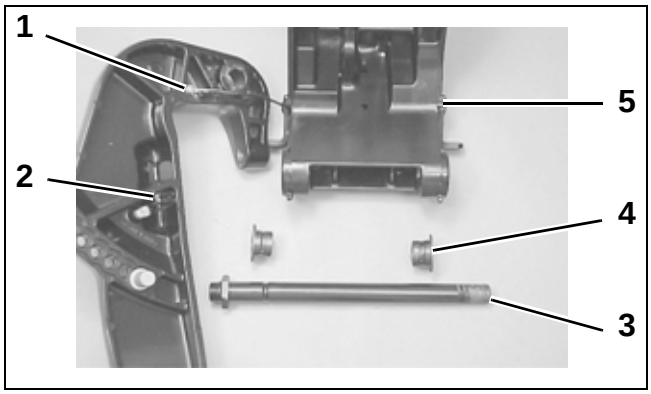

1. Bonding wire 001802
2. Stern bracket (port side)
3. Tilt tube
4. Bushings (2)
5. Swivel bracket

Installation

IMPORTANT: An insulation washer must be installed between the bonding wire terminal and the stern bracket.

Attach the bonding wire to the port side stern bracket. Tighten the screw securely.

Apply *Triple-Guard* grease to the tilt tube and the bushings. Insert both bushings into the swivel bracket.

Install the stern brackets and the tilt tube to the swivel bracket.

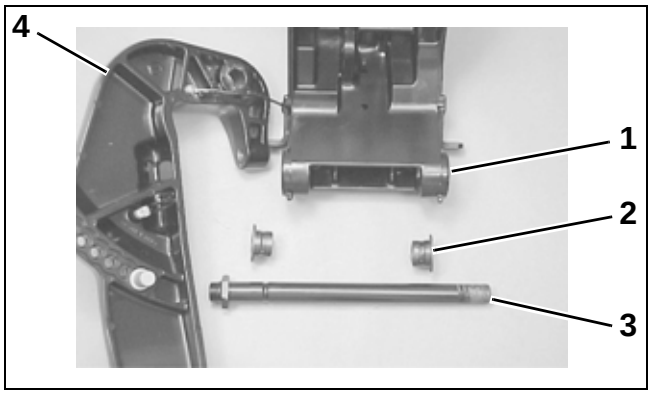

1. *Swivel bracket* 001802
2. *Bushings (2)*
3. *Tilt tube*
4. *Stern bracket*

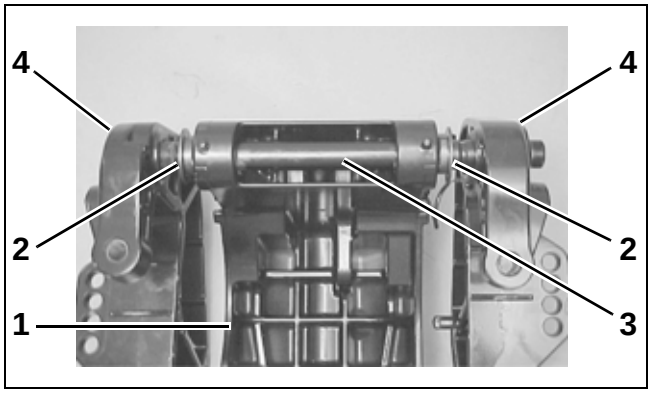

1. *Swivel bracket* 001810
2. *Bushings (2)*
3. *Tilt tube*
4. *Stern bracket*

Install the tilt tube nut. Leave the nut loose for easier installation of the PTT unit (or the tilt assist cylinder).

Install the PTT unit (or the tilt assist cylinder) between the stern brackets. Tighten the tilt tube nut to a torque of 32 ft. lbs. (43 N·m).

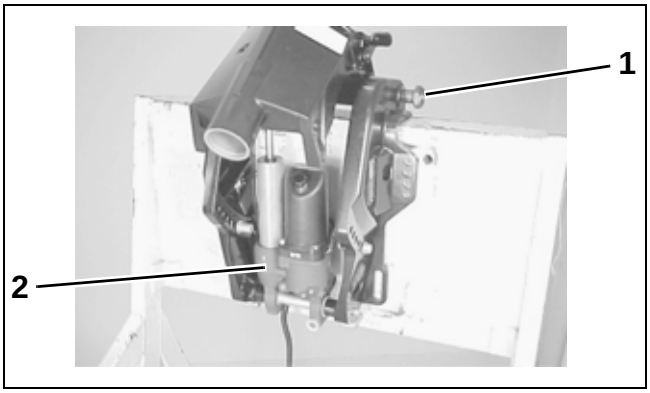

1. *Tilt tube nut* 001811
2. *PTT unit (or tilt assist cylinder)*

Install the lower bushing (tapered end first) and the steering arm seal in the swivel bracket. Make sure that the lip of the seal is facing outward.

After installation, apply *Triple-Guard* grease to the seal lip.

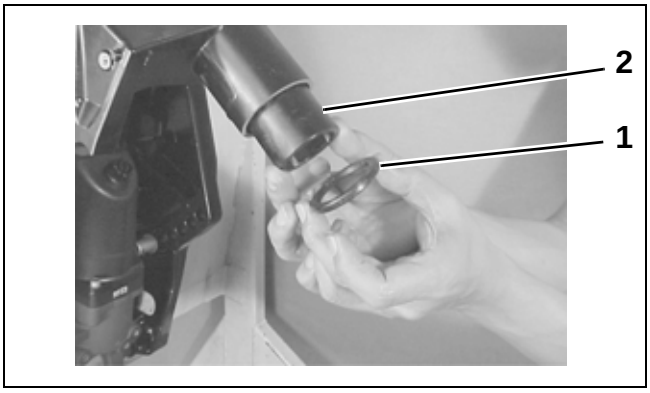

1. *Steering arm seal* 001797
2. *Lower bushing*

Apply *Triple-Guard* grease to the upper bushing. Install the upper bushing (tapered end first), the steering adjuster, the plate, and the washer in the swivel bracket.

IMPORTANT: Make sure the steering adjuster is installed between the upper bushing and the swivel bracket.

Install the spring, the washer, the cover, and the steering adjuster bolt.

Apply *Triple-Guard* grease to the steering arm shaft. Slide the steering arm into the swivel bracket.

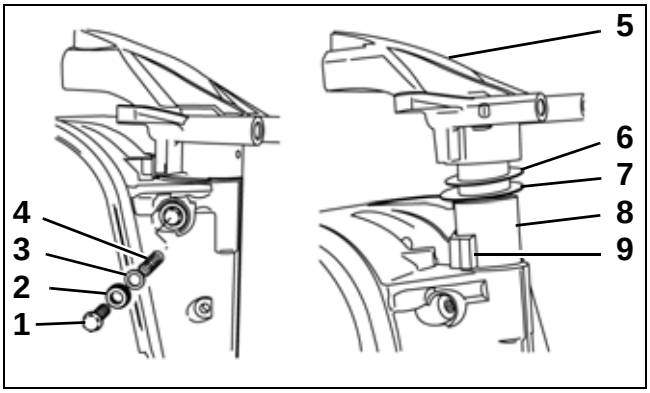

1. *Steering adjuster bolt* 001796
2. *Cover*
3. *Washer*
4. *Spring*
5. *Steering arm*
6. *Washer*
7. *Plate*
8. *Upper bushing*
9. *Steering adjuster*

Tiller handle models only: Install the bolt that secures the steering adjuster plate to the steering bracket.

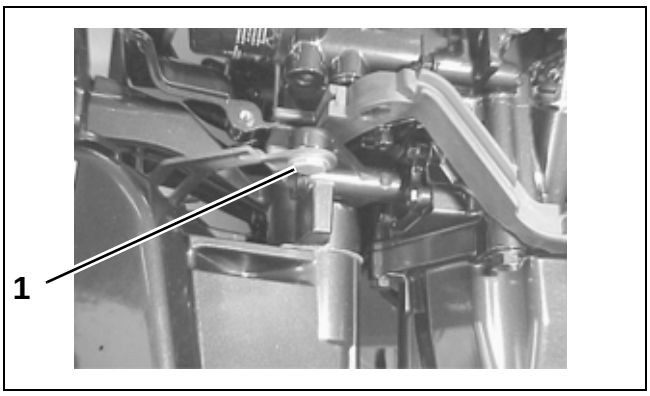

1. *Bolt* 001795

Install the washer and the shim, then insert the key into the groove on the steering arm shaft.

Align the key with the channel in the lower mount bracket, then install the lower mount bracket.

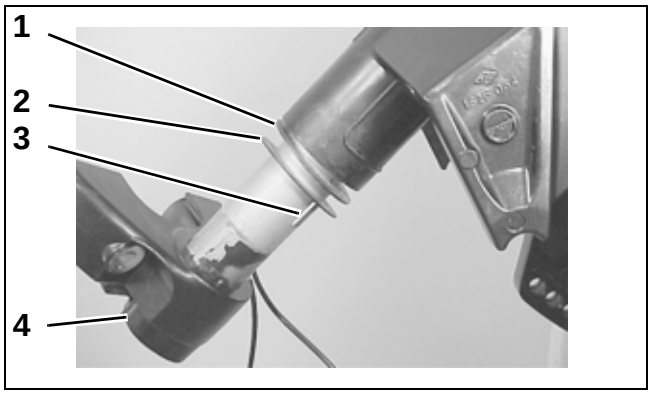

1. *Washer* 001813
2. *Shim*
3. *Key*
4. *Lower mount bracket*

Install the retaining ring to secure the steering arm to the swivel bracket.

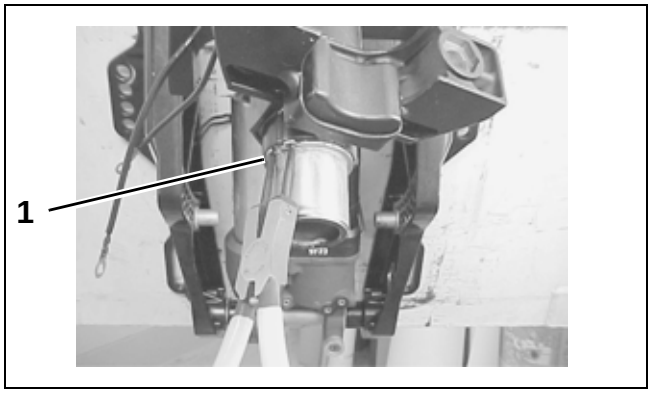

1. *Retaining ring* 001814

IMPORTANT: An insulation washer must be installed between the bonding wire terminals and the brackets.

Attach the bonding wires to the swivel bracket and the lower mount bracket. Tighten the screws securely.

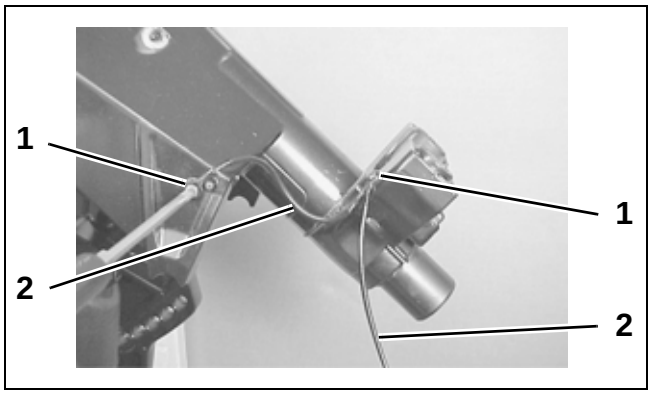

1. Screws 001793
2. Bonding wires

Apply *Triple-Guard* grease through each grease nipple.

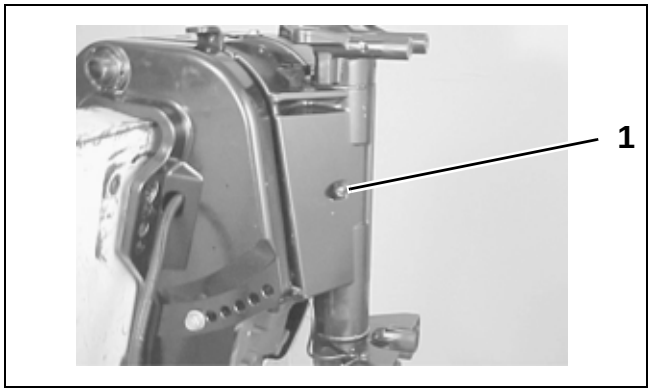

1. Grease nipple 001816

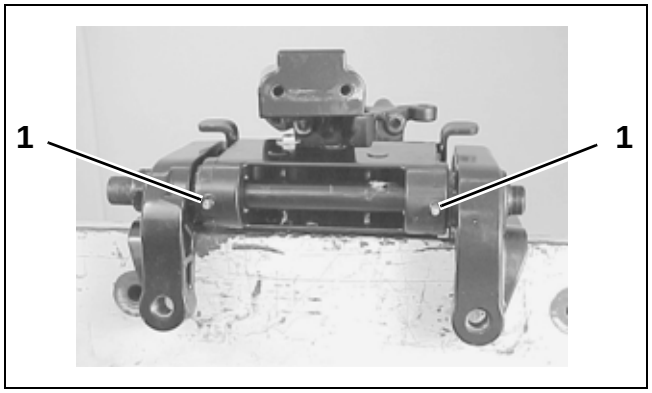

1. Grease nipple 001817

NOTES

Technician's Notes

Related Documents

Bulletins	
Instruction Sheets	
Other	

GEARCASE

TABLE OF CONTENTS

COMPONENTS 196
PROPELLER 198
REMOVAL 198
INSPECTION 198
INSTALLATION 198
TRIM TAB ADJUSTMENT 199
LUBRICANT 200
DRAINING 200
INSPECTION 200
FILLING 200
LEAK TEST 201
REMOVAL AND INSTALLATION 201
REMOVAL 201
INSTALLATION 202
WATER PUMP 204
DISASSEMBLY 204
INSPECTION 204
ASSEMBLY 205
DISASSEMBLY 205
PRE-DISASSEMBLY INSPECTION 205
PROPELLER SHAFT BEARING HOUSING REMOVAL 206
PROPELLER SHAFT DISASSEMBLY 206
PINION GEAR AND DRIVESHAFT REMOVAL 207
DRIVESHAFT DISASSEMBLY 209
SHIFT ROD REMOVAL 209
SHIFT ROD DISASSEMBLY 210
BEARING AND SEAL REMOVAL 210
BEARING AND SEAL INSTALLATION 212
ASSEMBLY 215
PRE-ASSEMBLY INSPECTION 215
SHIFT ROD ASSEMBLY 215
DRIVESHAFT ASSEMBLY 216
PINION GEAR AND DRIVESHAFT INSTALLATION 217
PROPELLER SHAFT ASSEMBLY 218
PROPELLER SHAFT BEARING HOUSING INSTALLATION 219
SHIMMING AND GEAR BACKLASH CHECKS 220
CHECKING THE FORWARD GEAR-TO-PINION GEAR BACKLASH 220
CHECKING THE TOOTH CONTACT PATTERN 221
CHECKING THE DRIVESHAFT THRUST PLAY 222
CHECKING THE PROPELLER SHAFT THRUST PLAY 223
NOTES 224

COMPONENTS

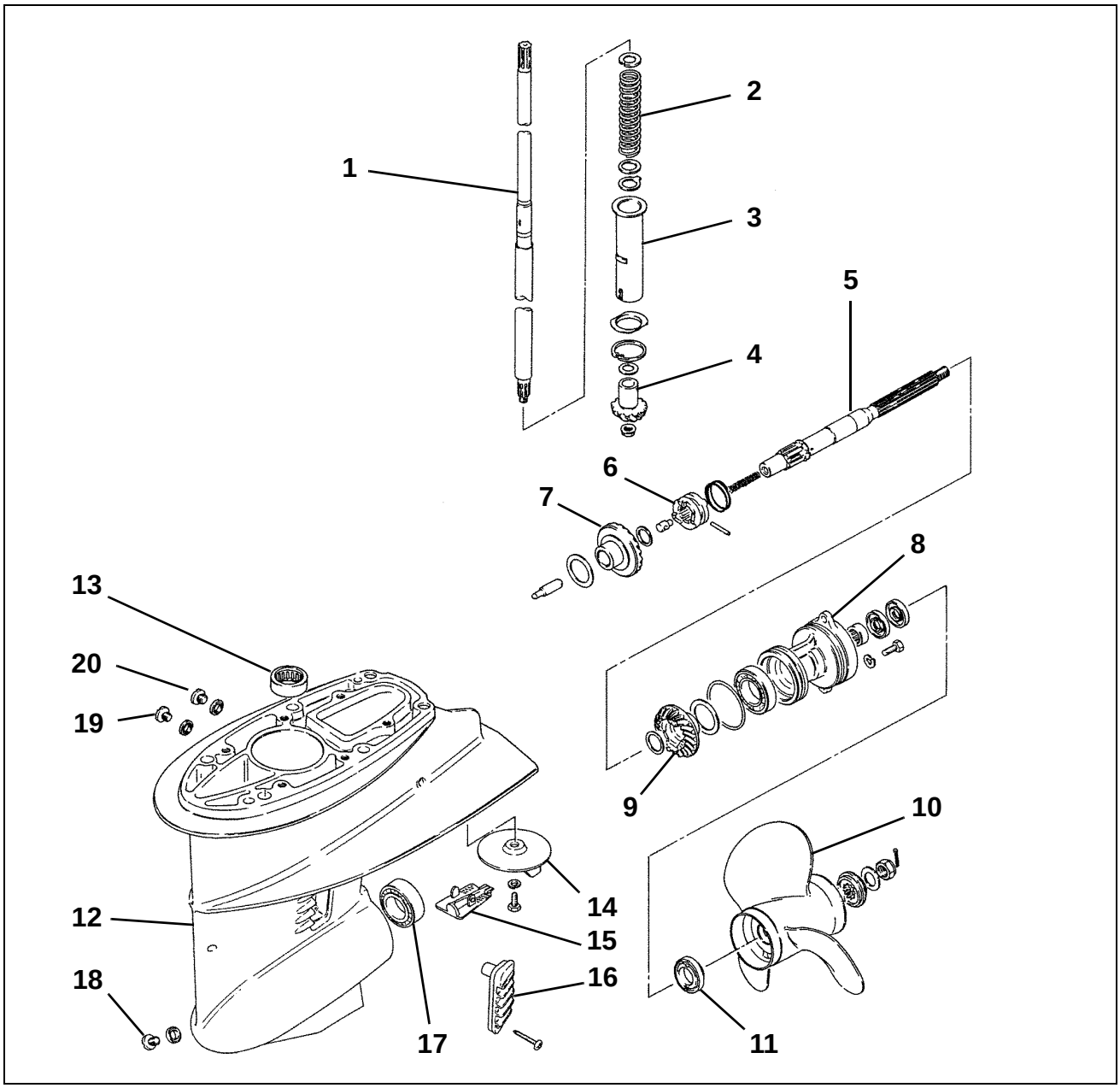

001868

1. *Driveshaft*
2. *Preload spring*
3. *Preload spring collar*
4. *Pinion gear*
5. *Propeller shaft*
6. *Clutch dog shifter*
7. *Forward gear*
8. *Propeller shaft bearing housing*
9. *Reverse gear*
10. *Propeller*
11. *Stopper*
12. *Gearcase*
13. *Pinion bearing*
14. *Trim tab*
15. *Sub water filter*
16. *Water filter*
17. *Forward Gear Bearing*
18. *Lubricant Drain plug*
19. *Lubricant Level plug*
20. *Cooling Water Flushing plug*

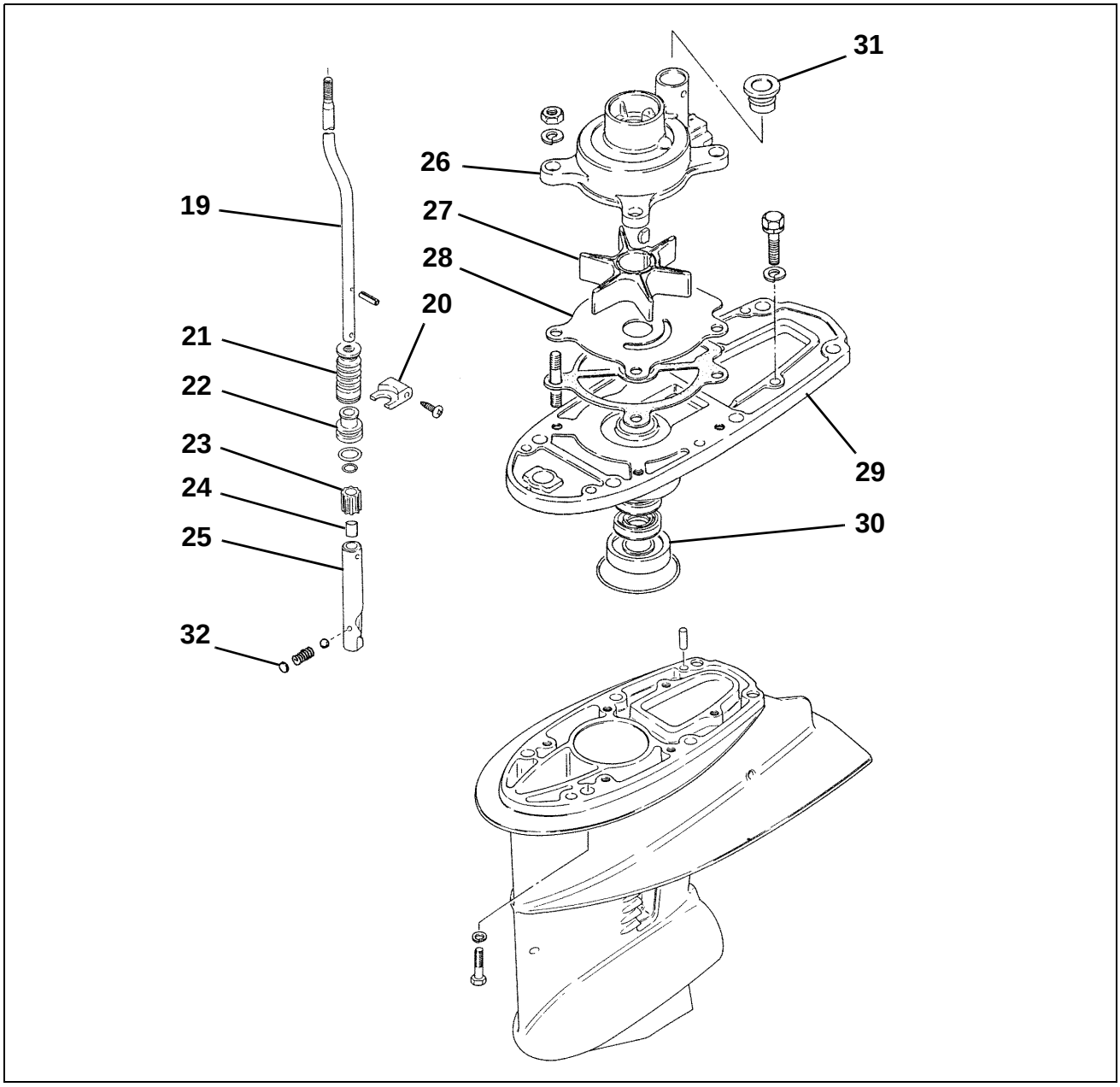

21. Shift rod
22. Stopper
23. Boot
24. Shift rod guide
25. Magnet
26. Holder
27. Shift cam
28. Water pump case
29. Impeller
30. Under plate
31. Driveshaft bearing housing
32. Bearing
33. Grommet
34. Notch plate

001869

PROPELLER

Removal

WARNING

To prevent accidental starting while servicing, remove the emergency stop lanyard and twist and remove all spark plug leads.

Place the shift lever in NEUTRAL.

Wedge a block of wood between a propeller blade and the anti-cavitation plate to hold the propeller in place.

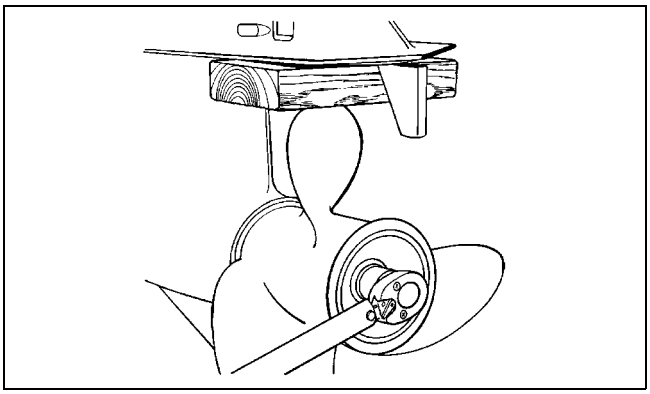

DRC3984

Remove the cotter pin from the propeller nut and remove propeller nut.

Remove the washer, the spacer, the propeller, and the thrust bushing from the propeller shaft.

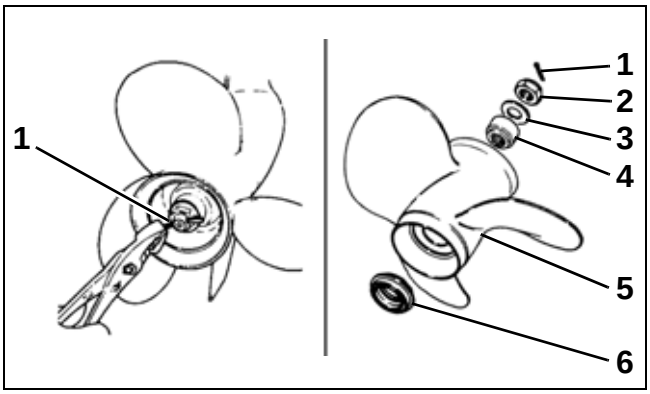

001827

1. *Cotter pin*
2. *Propeller nut*
3. *Washer*
4. *Spacer*
5. *Propeller*
6. *Thrust bushing*

Inspection

Check for the following:

- Damaged blades and signs of propeller cavitation (burned paint, etc.)
- Spun or overheated inner hub
- Worn or twisted propeller bushing splines and inadequate lubricant
- Damage to outer hub area
- Worn, missing, or incorrect washer and spacer
- Correct size of propeller
- Bent or damaged propeller shaft and twisted splines

Installation

Place the shift lever in NEUTRAL.

Apply *Triple-Guard* grease to the entire propeller shaft before installing the propeller.

Install thrust bushing onto propeller shaft with shoulder of thrust bushing facing aft. Taper of bushing must match taper of propshaft.

Install propeller on propeller shaft by aligning splines and pushing until seated on the thrust bushing.

Install the spacer and the washer.

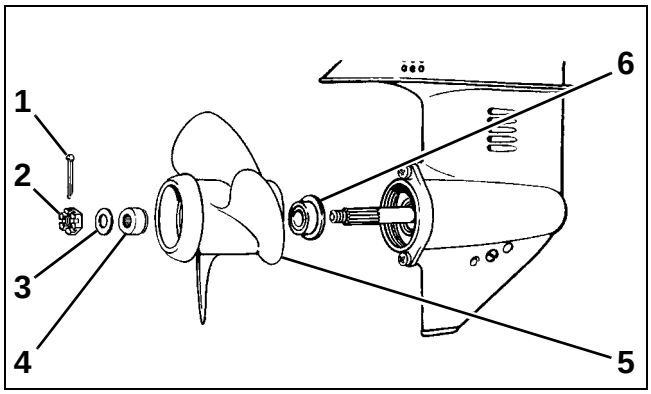

001828

1. *Cotter pin*
2. *Propeller nut*
3. *Washer*
4. *Spacer*
5. *Propeller*
6. *Thrust bushing*

Wedge a block of wood between propeller blade and the anti-ventilation plate.

Install the propeller nut and torque to:
- 156 in. lbs. (18 N·m)

If cotter pin holes in the propeller nut and propeller shaft are not aligned, tighten the nut until they are in line. Do not loosen.

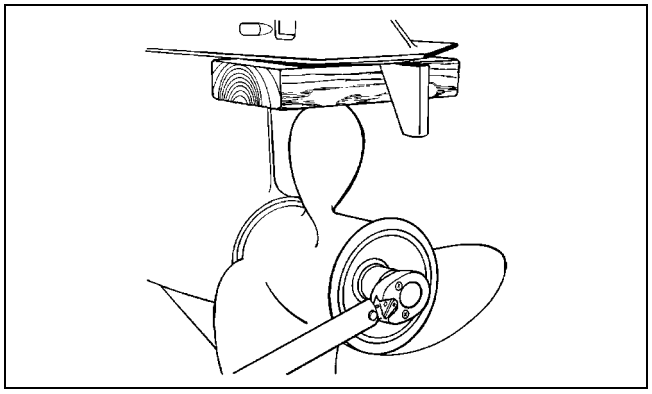

DRC3984

Insert a new cotter pin through the propeller nut and shaft. Bend its ends over the nut to secure the assembly.

IMPORTANT: After fastening propeller nut, make sure outboard is in NEUTRAL and carefully spin propeller. Propeller must turn freely and should not spin off center. If propeller appears to wobble, check for possible bent propeller shaft.

TRIM TAB ADJUSTMENT

⚠ CAUTION ⚠

Improper trim tab adjustment can cause difficult steering and loss of control.

A propeller will generate steering torque when the propeller shaft is not running parallel to the water's surface. The trim tab is adjustable to compensate for this steering torque.

A single trim tab adjustment will relieve steering effort under only one set of speed, outboard angle, and load conditions. No single adjustment can relieve steering effort under all speed, outboard angle, and load conditions.

If the boat pulls to the left or right when its load is evenly distributed, adjust the trim tab as follows:
- **With the engine shut OFF,** loosen the trim tab bolt. If the boat pulled to starboard, move the rear of the trim tab slightly to the right. If the boat pulled to port, move the rear of the trim tab slightly to the left.
- Tighten the trim tab bolt.
- Test the boat and, if needed, repeat the procedure until steering effort is as equal as possible.

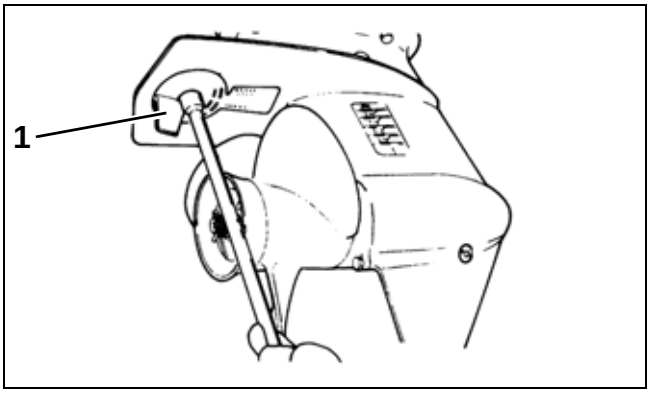

1. Trim tab 001826

LUBRICANT

Draining

WARNING

Gearcase lubricant may be under pressure and/or hot if plug is removed from recently operated outboard. Take precaution to avoid injury.

Remove the lubricant level plug, then the lubricant drain/fill plug, and drain the lube from the gearcase into a container. Inspect the lube and the plugs for metal chips.

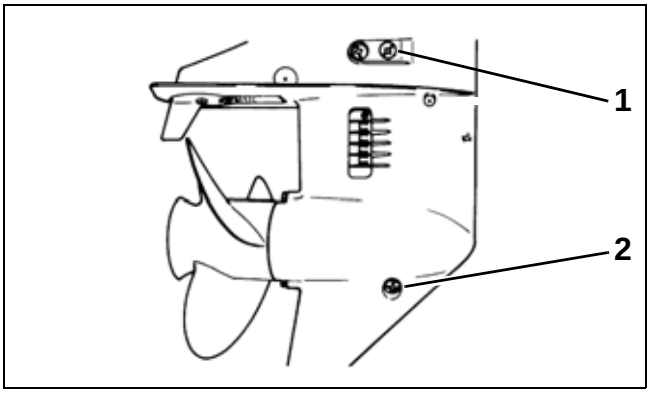

1. Lubricant level plug
2. Lubricant drain/fill plug

001825

The presence of metal **fuzz** can indicate normal wear of the gears, bearings, or shafts within the gearcase. Metal **chips** can indicate extensive internal damage.

Inspection

Inspect the lubricant for water contamination. Water can make the lubricant milky in appearance. However, normal aeration can also cause the same appearance.

To check for water contamination, drain lubricant into a suitable glass container. Allow the drained oil to settle for a minimum of one hour to determine if there is an abnormal amount of water in the oil. Some gearcase lubricants are designed to mix with a small amount of water from normal water vapor condensation within the gearcase.

Overheated lubricant will have a black color and burned odor.

Internal gearcase inspection is recommended when lubricant is contaminated or shows signs of failure.

Filling

Secure the gearcase in a vertical position.

Remove the lubricant level plug and the lubricant drain/fill plug.

Slowly fill the gearcase with *HPF XR* gearcase lube through the drain/fill hole until it appears at the oil level hole. Filling the gearcase too quickly can cause air pockets and the gearcase may not fill completely.

If using pressurized lubricant tank, use fitting adapter, P/N 772269.

Clean plug seal area and install the lubricant level plug and **new** seal, then the lubricant drain/fill plug and **new** seal. Tighten them to a torque of 60 to 84 in. lbs. (7 to 9.5 N·m).

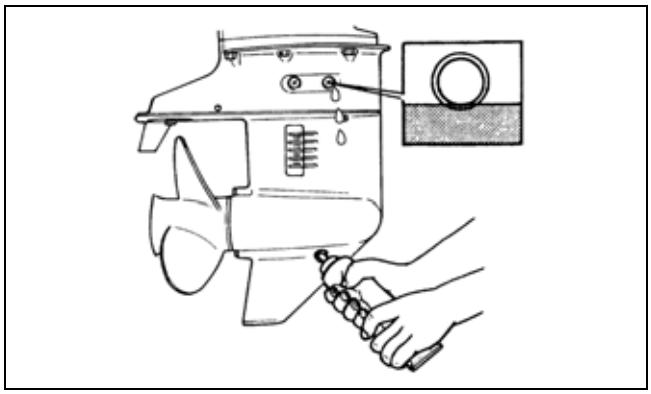

001318

Refer to the **SERVICE SPECIFICATIONS AND SPECIAL TOOLS** section for gearcase lubricant capacities.

LEAK TEST

Drain lubricant before testing.

STEP 1

Install lubricant drain/fill plug and seal, thread pressure test gauge fitting and seal in lubricant level hole.

Pressurize 3 to 6 psi (21 to 42 kPa).

If pressure gauge indicates leakage, submerge the gearcase in water to determine source of leak.

If the gearcase pressure gauge does not indicate leakage, increase pressure to 14 psi (100 kPa). Check for leakage.

Make necessary repairs and repeat test.

STEP 2

Complete successful **STEP 1** before proceeding.

Install vacuum test gauge to the test fitting using adapter, P/N 772269. Connect an air pump to the test gauge and apply a vacuum of 3 to 5 in. Hg. (10 to 17 kPa).

If leakage occurs, apply oil around suspected seal. If leak then stops or oil is drawn in, that seal is defective.

Repeat test. Gearcase must hold minimum of 15 in. (381 mm) Hg.

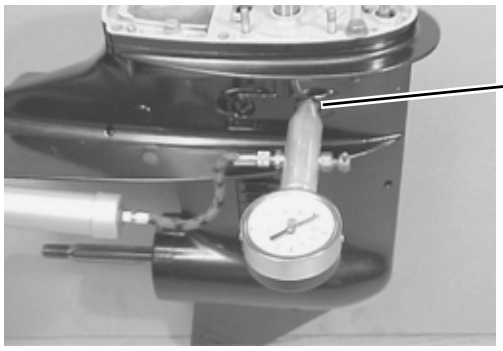

1. Oil level hole 001889

REMOVAL AND INSTALLATION

Removal

WARNING

During service, the outboard may drop unexpectedly. To avoid personal injury, always support the outboard's weight with a suitable hoist.

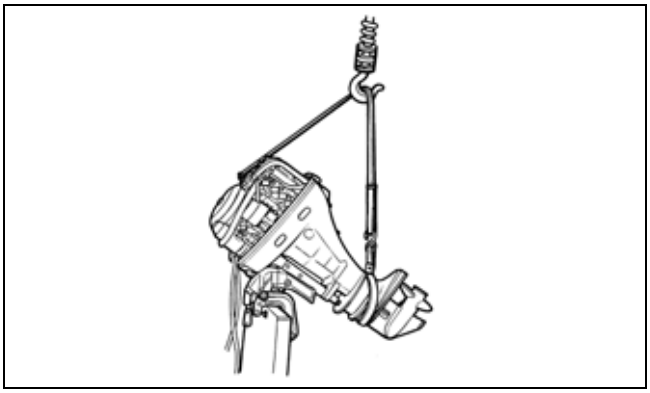

001731

Drain the lubricant from the gearcase. Refer to "LUBRICANT" on page 200.

Remove the propeller from the gearcase. Refer to "PROPELLER" on page 198.

Loosen the clutch rod locknut. Unscrew the turnbuckle to separate the clutch rod from the shift rod.

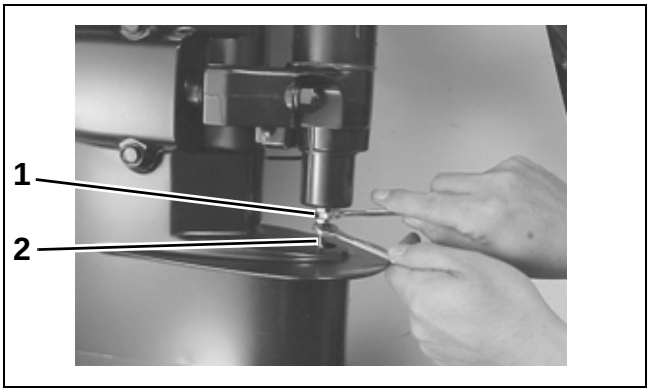

1. Locknut 001823
2. Turnbuckle

Remove six (6) bolts and separate the gearcase from the exhaust housing.

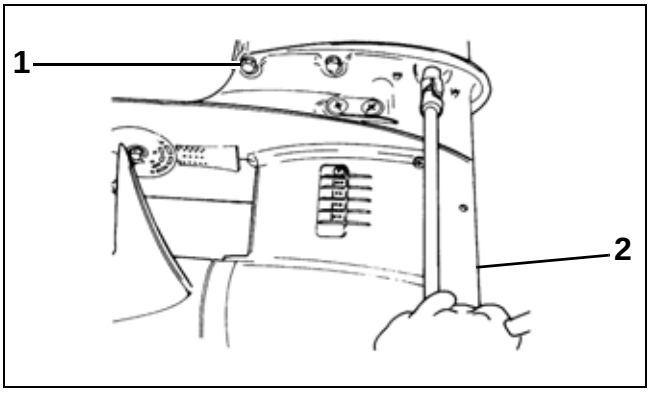

1. Bolts (6) 001824
2. Gearcase

If necessary, remove the trim tab.

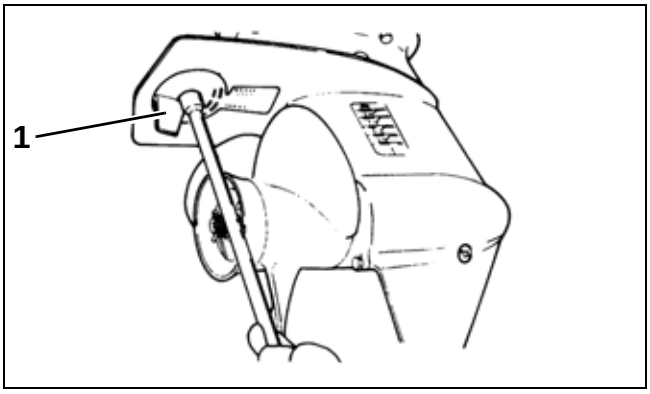

1. Trim tab 001826

Installation

If removed, insert two (2) dowel pins.

Coat the driveshaft splines with *Triple-Guard* grease.

Apply a light coat of *Gasket Sealing Compound* to the mating surfaces of the gearcase and the exhaust housing.

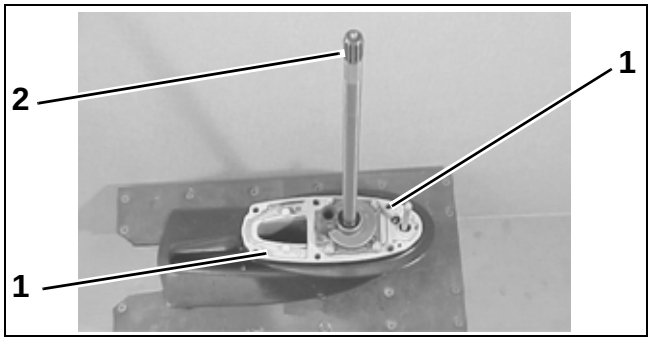

1. Dowel pins (2) 001892
2. Driveshaft splines

Slide the gearcase into place on the exhaust housing. Make sure that the top of the driveshaft engages properly with the crankshaft and the water tube locates in the water pump case outlet.

Apply *Gasket Sealing Compound* to the gearcase bolts. Install and tighten the bolts to a torque of 16.5 ft. lbs. (23 N·m).

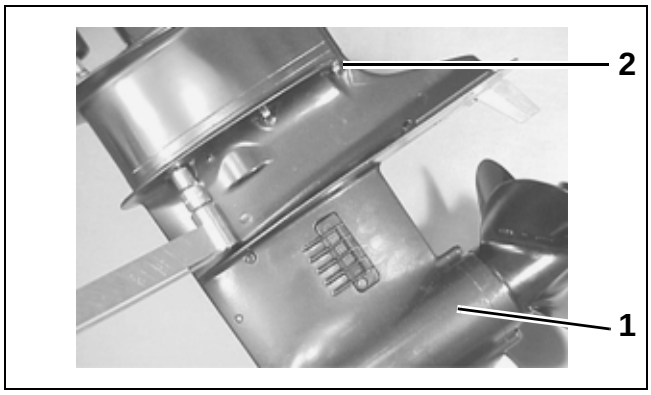

1. Gearcase 001893
2. Bolts (6)

Fill the gearcase with the specified lubricant. Refer to “LUBRICANT” on page 200.

Connect the clutch rod to the shift rod. Make sure that the chamfered edge of the turnbuckle faces downward to seat against the locknut when tightened.

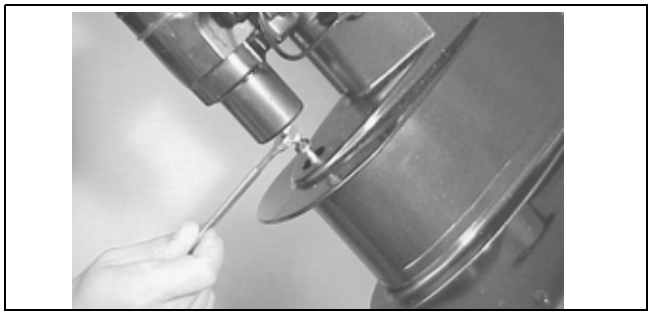

001898

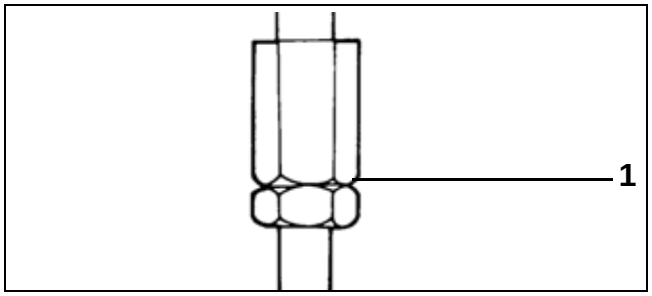

1. Chamfered edge 001895

Check the adjustment of the clutch lever. Refer to “Adjusting the Clutch Lever” on page 203.

Adjusting the Clutch Lever

Shift the clutch lever from NEUTRAL through FORWARD and then from NEUTRAL through REVERSE to check whether both gears engage at an equal angle from NEUTRAL.

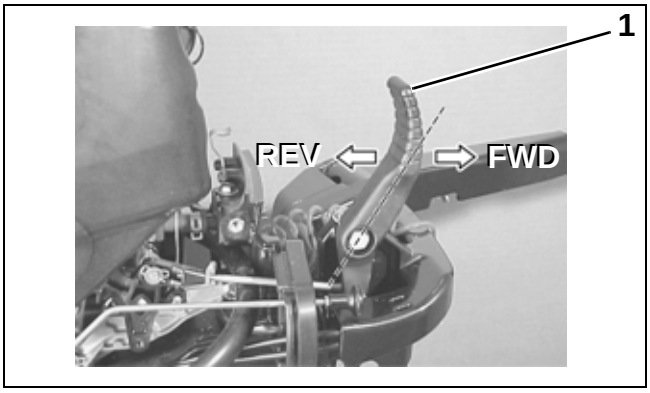

1. Shift lever 001896

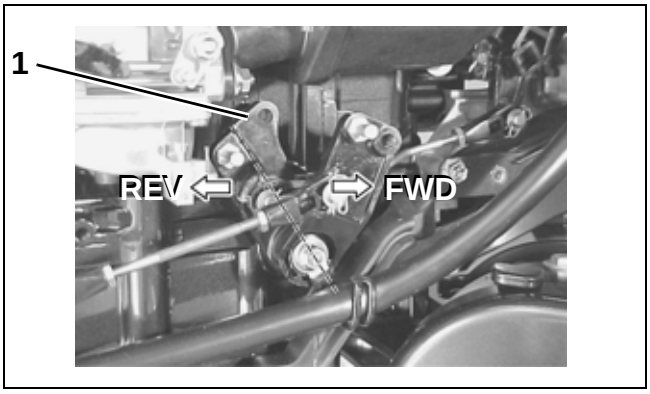

1. Clutch lever 001897

- If forward gear engages earlier (at a smaller angle) than reverse gear, rotate the turnbuckle **clockwise** until both gears engage with the same amount of clutch lever travel.
- If reverse gear engages earlier (at a smaller angle) than forward gear, rotate the turnbuckle **counterclockwise** until both gears engage with the same amount of clutch lever travel.

Tighten the locknut securely against the turnbuckle when the adjustment is correct.

001899

WATER PUMP

Disassembly

Remove the gearcase from the exhaust housing. Refer to “REMOVAL AND INSTALLATION” on page 201.

Loosen four (4) nuts and the washers, then remove the impeller housing.

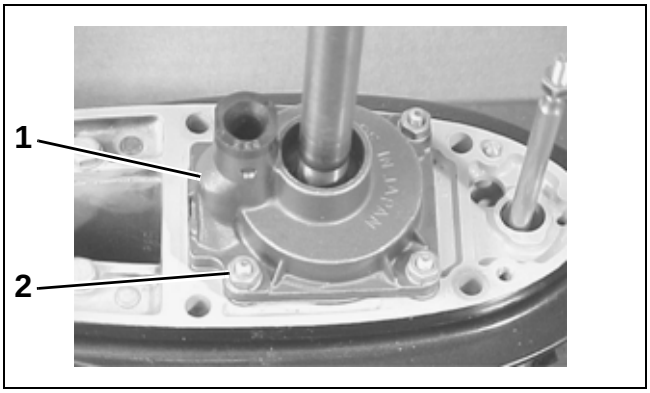

1. *Impeller housing* 001891
2. *Nuts (4)*

Remove the impeller, the impeller key, the impeller housing plate, and the gasket under the plate. Keep the key for reuse, but discard the gasket.

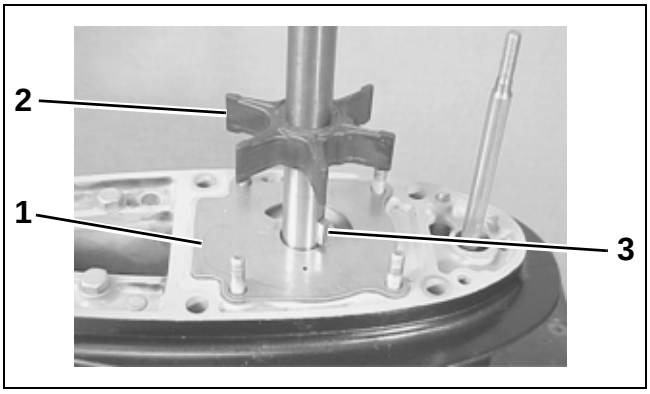

1. *Impeller housing plate* 001890
2. *Impeller*
3. *Impeller key*

Inspection

Check the impeller for overheating, hub separation, and visible signs of wear or damage.

Check the plate and inside the housing for scoring, distortion, and impeller material transfer.

Check the housing for cracks or melting.

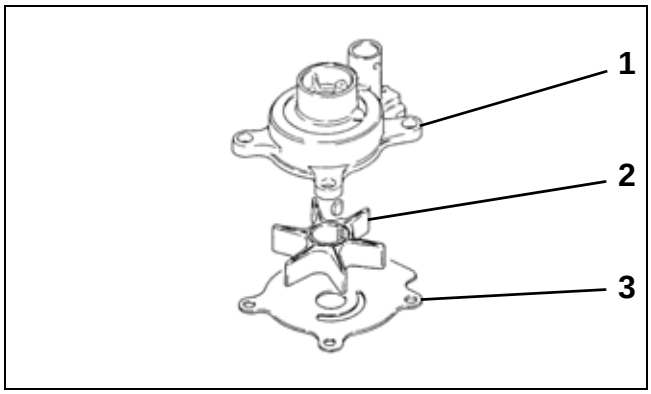

1. *Impeller housing* 001861
2. *Impeller*
3. *Impeller housing plate*

Assembly

Install a **new** gasket and the plate on top of the gearcase.

Insert the impeller key in the driveshaft, then slide the impeller onto the driveshaft. Make sure that the key and keyway on the impeller are aligned.

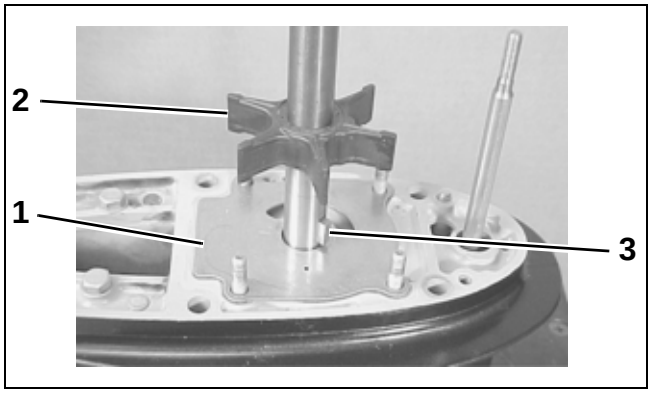

1. Impeller housing plate 001890
2. Impeller
3. Impeller key

Install the impeller housing while rotating the driveshaft clockwise to flex the impeller vanes in the correct direction.

Install and tighten four (4) nuts to a torque of 71 in. lbs. (8 N·m).

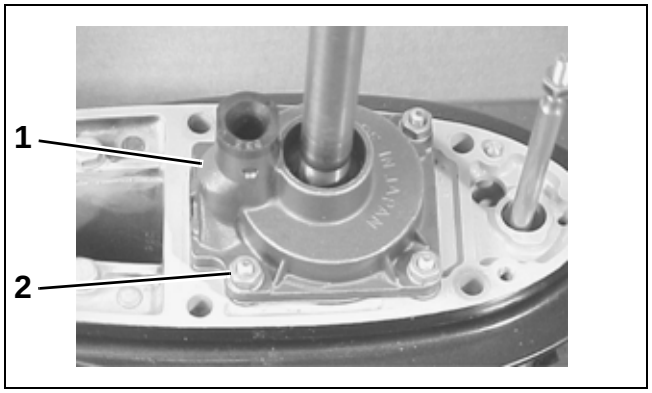

1. Impeller housing 001891
2. Nuts (4)

DISASSEMBLY

IMPORTANT: Clean and inspect all components during disassembly. Replace all damaged components, seals, O-rings, and gaskets upon assembly.

Pre-Disassembly Inspection

Before disassembling the gearcase, examine the following:

- **Gearcase housing** — All gasket surfaces must be free of gasket material. All threaded holes must be free of corrosion and sealer. Make sure that the inside of the gearcase is clean and free of debris.
- **Gearcase anode** — If the anode has been reduced to two-thirds of its original size, it must be replaced.
- **Driveshaft** — Check the splines for chips, wear, and cracks. Bearing and gear surfaces must not show signs of metal transfer, corrosion, or discoloration. Severe spline wear might indicate a exhaust housing or gearcase that has been distorted by impact damage.
- **Propeller Shaft —** Check for bent or damaged shaft. Check for twisted splines and damaged threads.
- **Shift Rod —** Check for misadjusted, bent, or binding rod. A misadjusted shift rod height can cause shift difficulty, loss of boat and outboard control, and gearcase damage.
- **Water intake screen** — The screen must be clear. If the screen cannot be adequately cleaned, replace it. Different screens are available and should not be mixed. Refer to the correct parts manual for listing and description.
- **Water pump** — Check impeller for wear, crumbling, and hub bonding. Check impeller cup and plate for scoring and distortion.

Propeller Shaft Bearing Housing Removal

Remove the water pump from the gearcase. Refer to “WATER PUMP” on page 204.

Remove two (2) bolts that secure the propeller shaft bearing housing to the gearcase.

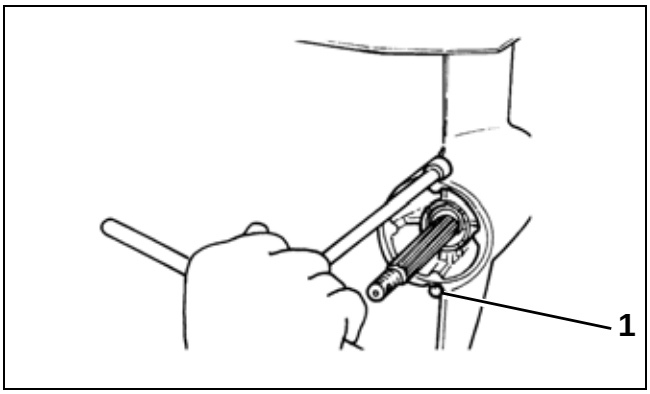

1. Bolts (2) 001829

Use a sliding hammer and a propeller shaft removal to remove the propeller shaft and bearing housing assembly.

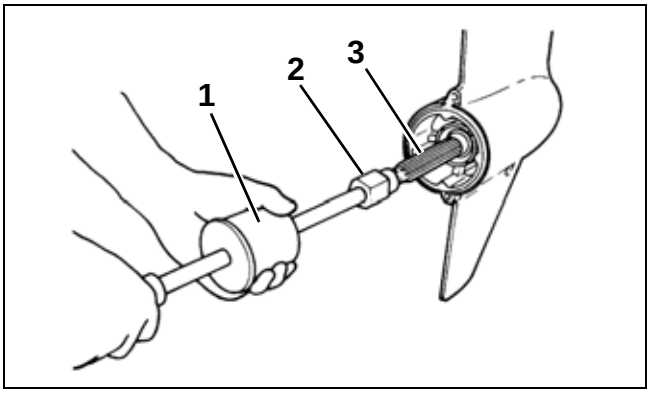

1. Sliding hammer, P/N 391008 001830
2. Propeller shaft removal tool, P/N 5034762
3. Propeller shaft

Propeller Shaft Disassembly

IMPORTANT: Clean and inspect all components during disassembly. Replace all damaged components, seals, O-rings, and gaskets upon assembly.

Slide the propeller shaft out of the bearing housing assembly.

Remove the shim, the reverse gear, and the thrust washer from the shaft.

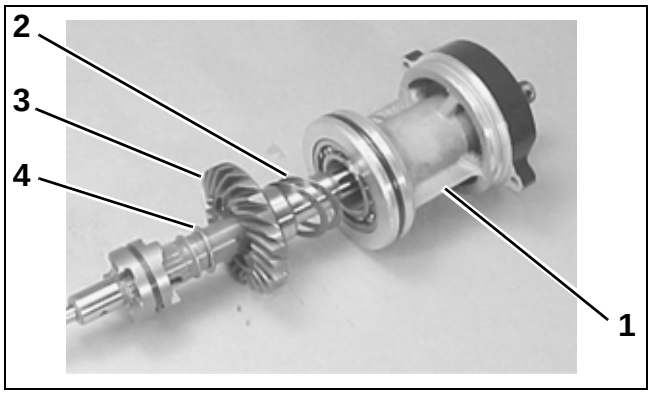

1. Bearing housing assembly 001842
2. Shim
3. Reverse gear
4. Thrust washer

Pull the push rod out of the end of the propeller shaft.

Remove the spring from the clutch dog shifter.

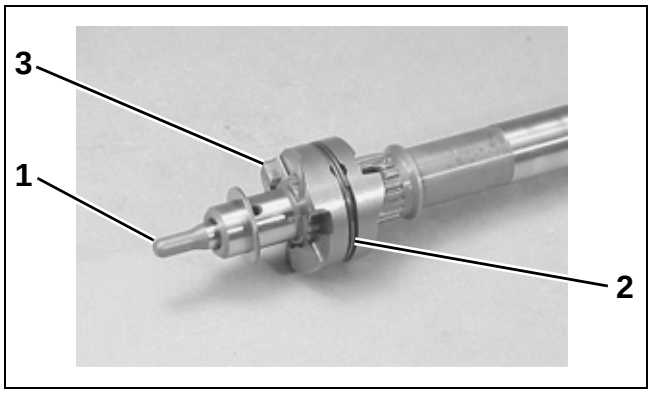

1. Push rod 001843
2. Spring
3. Clutch dog shifter

Use appropriate tool to push pin out of the clutch dog shifter. Remove the clutch dog shifter from the shaft.

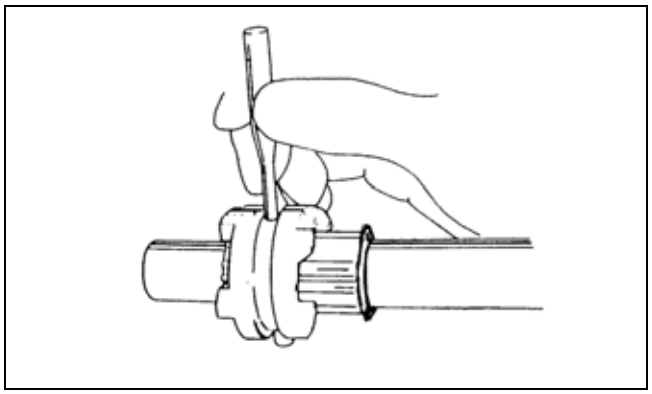

001844

Remove the push pin and the return spring from the end of the propeller shaft.

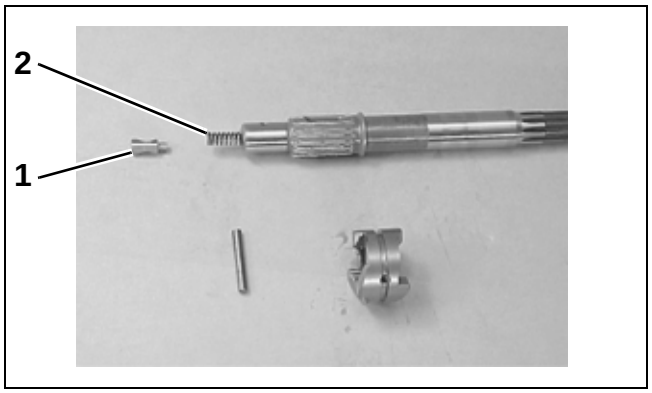

1. Push pin 001845
2. Return spring

Pinion Gear and Driveshaft Removal

Remove the propeller shaft bearing housing from the gearcase. Refer to “Propeller Shaft Bearing Housing Removal” on page 206.

Hold the pinion nut securely with a wrench. Fit a driveshaft holder to the end of the driveshaft and loosen the pinion nut. Remove the pinion nut from the gearcase.

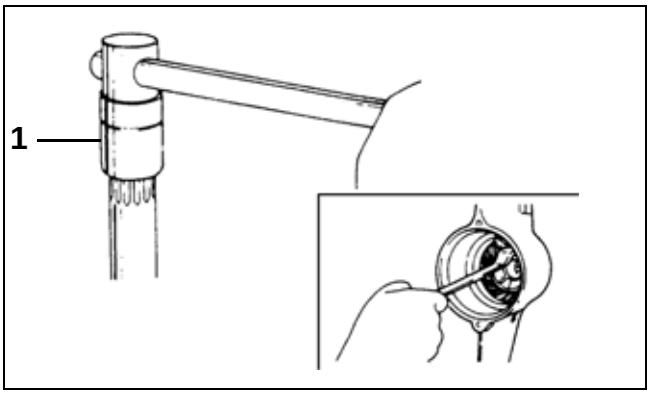

1. Driveshaft holder, P/N 345834 001833

Remove two (2) bolts that secure the driveshaft bearing housing to the gearcase.

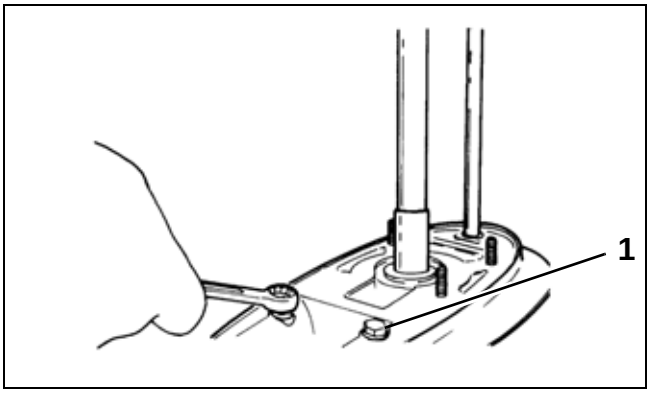

1. Bolts (2) 001834

To remove the driveshaft bearing housing from the gearcase, use two 6mm bolts as screw jacks. Turn each bolt alternately and equally to keep the housing level as it separates from the gearcase.

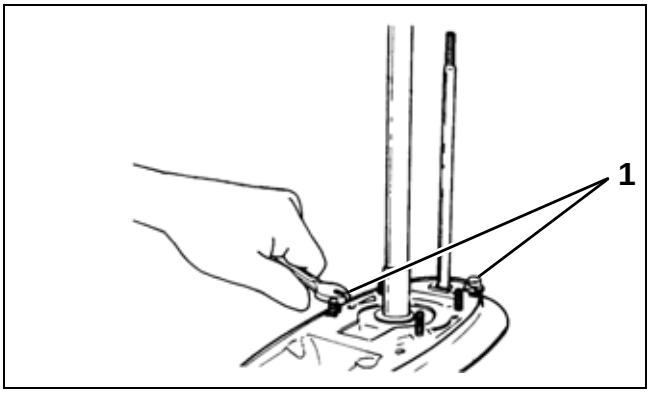

1. 6mm bolts (2) 001835

Lift the driveshaft and bearing housing assembly from the gearcase.

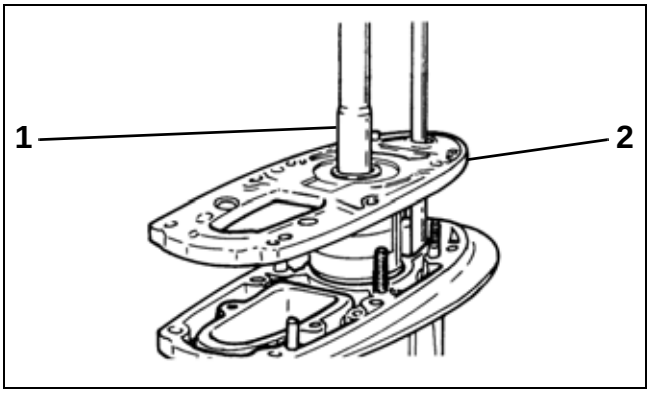

1. Driveshaft 001836
2. Bearing housing assembly

Remove the pinion gear, thrust washer, forward gear, shim, and bearing.

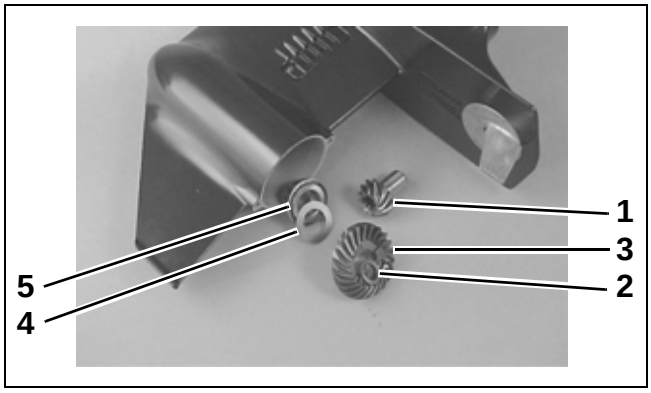

1. Pinion gear 001837
2. Thrust washer
3. Forward gear
4. Shim
5. Bearing

Remove pinion shim from the gearcase.

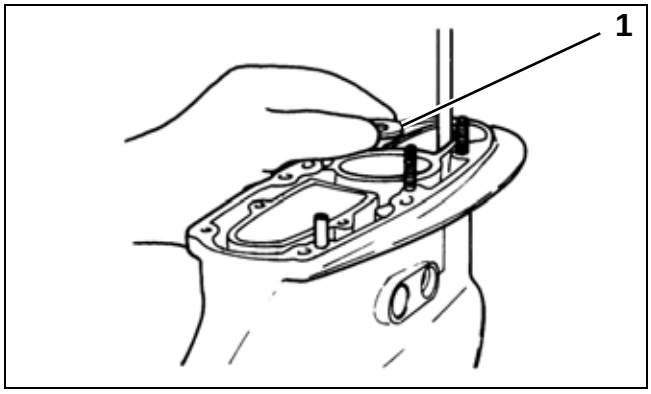

1. Pinion shim 001838

Driveshaft Disassembly

IMPORTANT: Clean and inspect all components during disassembly. Replace all seals, O-rings, gaskets, and damaged components.

WARNING

When removing or installing any type of retaining rings, wear eye protection to avoid personal injury.

Remove the retaining ring, the driveshaft, and the preload spring collar from the bearing housing.

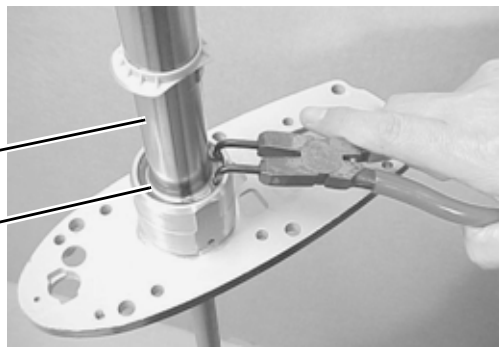

1. Retaining ring 001879
2. Preload spring collar

Remove the washer, the preload spring, the other washer, and the tab lock washer. Note the position of the tab lock washer before removal.

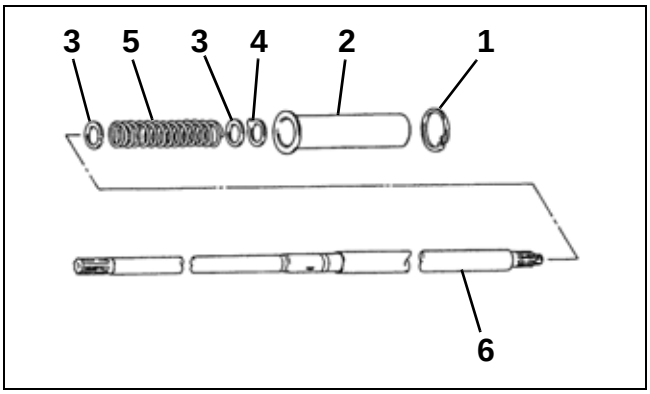

1. Retaining ring 001841
2. Preload spring collar
3. Washer
4. Tab lock washer
5. Preload spring
6. Driveshaft

Shift Rod Removal

Remove the screws that secure the shift rod guide stop. Remove the shift rod from the gearcase.

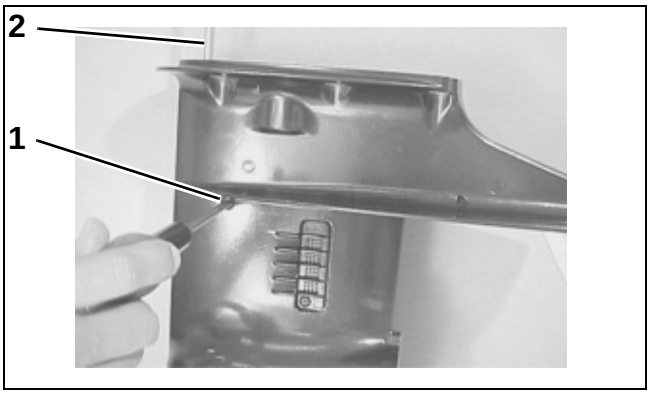

1. Screws (2) 001838
2. Shift rod assembly

Shift Rod Disassembly

Remove the stop from the shift rod guide.

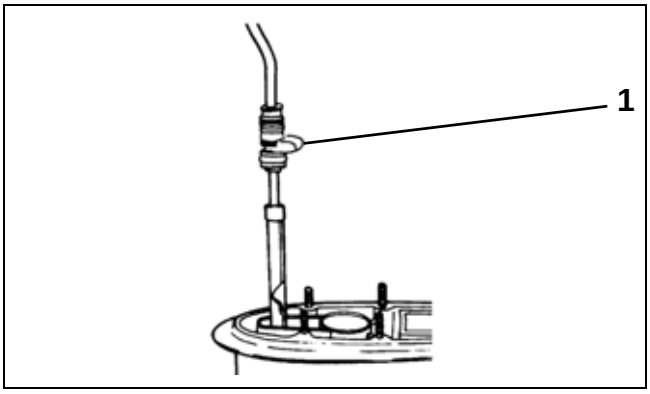

1. Shift rod guide stop 001860

Remove the cam pin and separate the shift rod cam from the shift rod.

Remove the spacer and the magnet from the shift rod.

Remove the shift rod pin, then remove the guide and the boot from the shift rod. Remove and discard the O-rings.

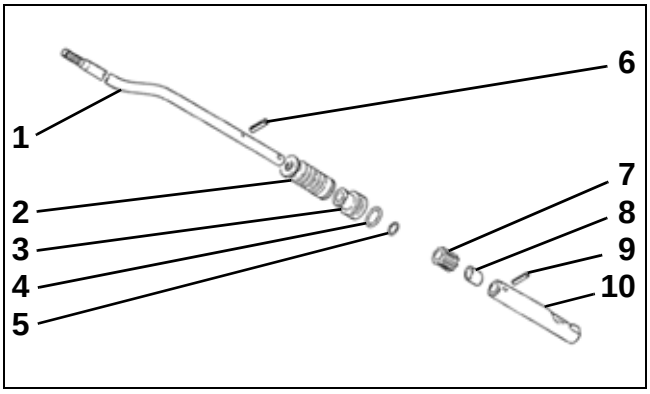

001872

1. *Shift rod*
2. *Boot*
3. *Shift rod guide*
4. *Guide O-ring (larger)*
5. *Shift rod O-ring (smaller)*
6. *Shift rod pin*
7. *Magnet*
8. *Spacer*
9. *Cam pin*
10. *Shift rod cam*

BEARING AND SEAL REMOVAL

IMPORTANT: Inspect bearings for damage while in place. **If a bearing is removed for any reason, it must be replaced.**

Propeller Shaft Bearing Housing Seals

Use an oil seal remover or 2-jaw puller and plate assembly, P/N 432131 to remove two (2) oil seals from the propeller shaft bearing housing.

Remove and discard the O-ring.

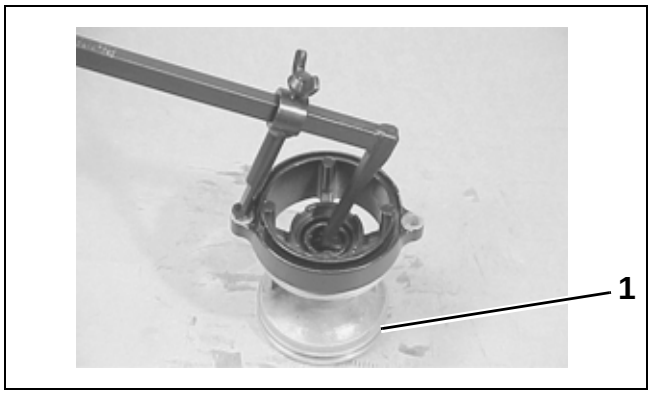

1. O-ring 001858

Reverse Gear Bearing

Use 2-jaw puller and plate assembly, P/N 432129, to remove reverse gear bearing.

Propeller Shaft Bearings

Use bearing removal tool, P/N 5034764, to press bearing from housing.

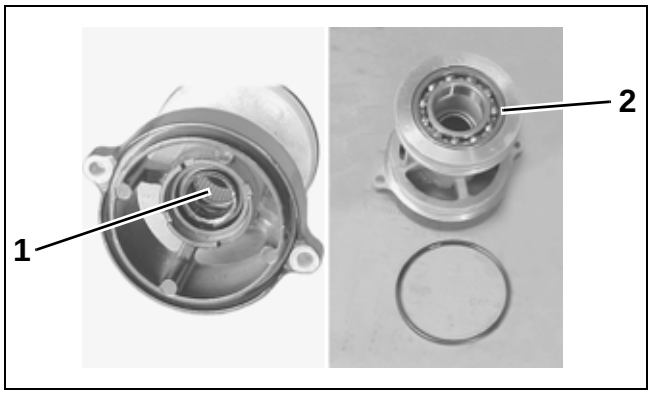

1. Propshaft bearing 001857
2. Reverse gear bearing

Forward Bearing Race

If forward gear bearing is replaced the race must be replaced. 2-jaw puller, P/N 432129, can be used with a plate obtained locally, to remove the bearing race from the gearcase housing.

Pinion Gear Bearing

Put a wood block under the pinion gear bearing.

To remove pinion bearing, assemble removal tool from Universal Pinion Bearing removal and installation Kit, P/N 391257, bearing removal/installation kit, P/N 5000009, and bearing removal/installation tool, P/N 5034763, as shown. Place removal tool inside the pinion gear bearing.

Drive out the bearing by striking the top of the shaft with heavy rawhide mallet. Be careful not to damage the gearcase.

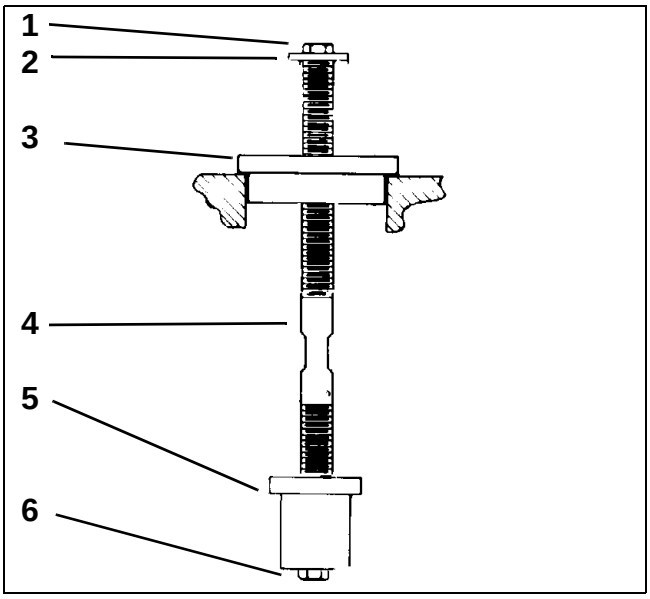

1. 1/4 - 20 x 1/2 in. Hex head screw 824163
2. 1 in. O.D. Flat Washer
3. Centering Guide from tool kit 5000009
4. Rod, P/N 326582
5. Pinion gear bearing removal/installation tool, P/N 5034763
6. 1/4 - 20 x 1 1/4 in. Hex head screw

Driveshaft Bearing Housing Seals

Use an oil seal remover or 2-jaw puller and plate assembly, P/N 432131, to draw two (2) oil seals out of the driveshaft bearing housing. Be careful not to damage driveshaft bearing race.

Remove the O-ring from the housing.

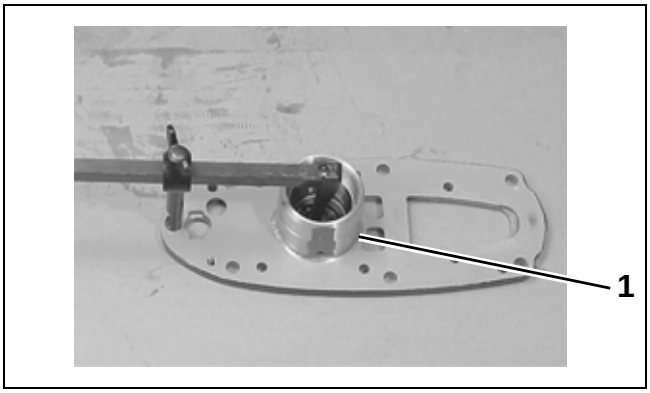

1. O-ring 001863

Driveshaft Bearing

If the driveshaft bearing is pitted, noisy or rough, press the bearing from the driveshaft and replace it. Seat new bearing to shaft carefully using press.

To remove driveshaft bearing race in driveshaft bearing housing, use 2-jaw puller and plate assembly, P/N 432131.

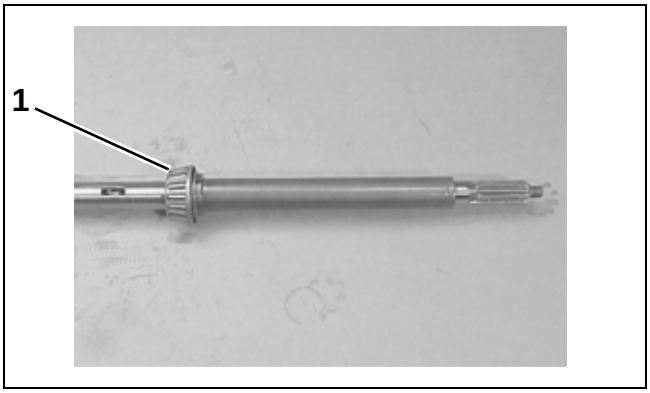

1. Driveshaft bearing 001865

BEARING AND SEAL INSTALLATION

Propeller Shaft Bearing

Apply *HPF XR* gearcase lubricant to the bearing. Using bearing installation tool, P/N 5034774, with lettered side of bearing facing tool, carefully press bearing into housing. Bearing is properly installed when tool flange seats against housing.

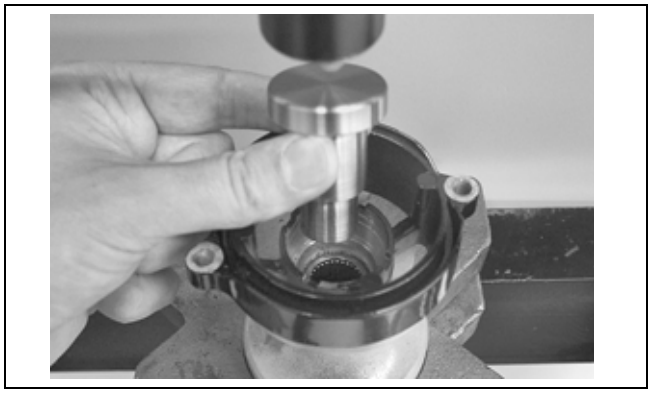

002513

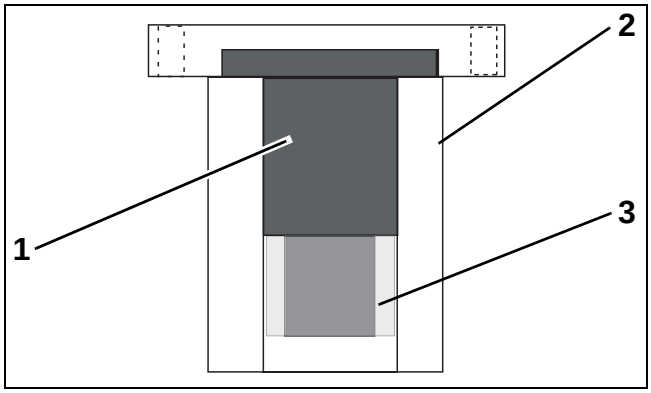

1. Bearing installation tool, P/N 5034774 002512
2. Propeller shaft bearing housing
3. Propeller shaft bearing

Propeller Shaft Bearing Housing Seals

Apply *Triple-Guard* grease to the inner circumference of the housing.

Place the **new** seals in position (one at a time) with the lips facing toward the propeller. Use oil seal installation tool, P/N 326545, to seat seals into bearing housing. Apply *Triple-Guard* grease to the seal lips after installation.

Install a **new** O-ring on the housing.

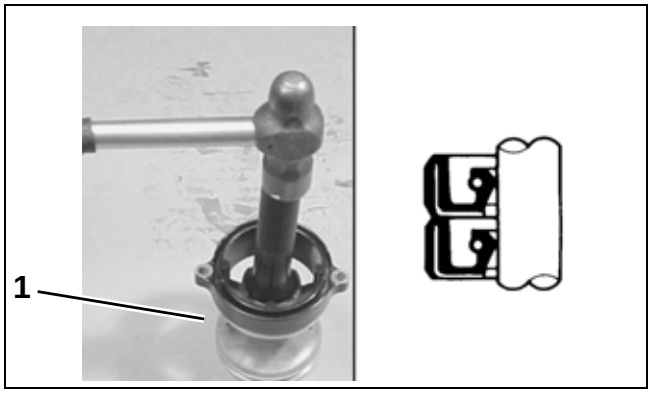

1. O-ring 001859

Reverse Gear Bearing

Apply *HPF XR* gearcase lubricant to the bearings.

Using suitable bearing installation tool obtained locally, press the bearing against outer race until fully seated in the housing.

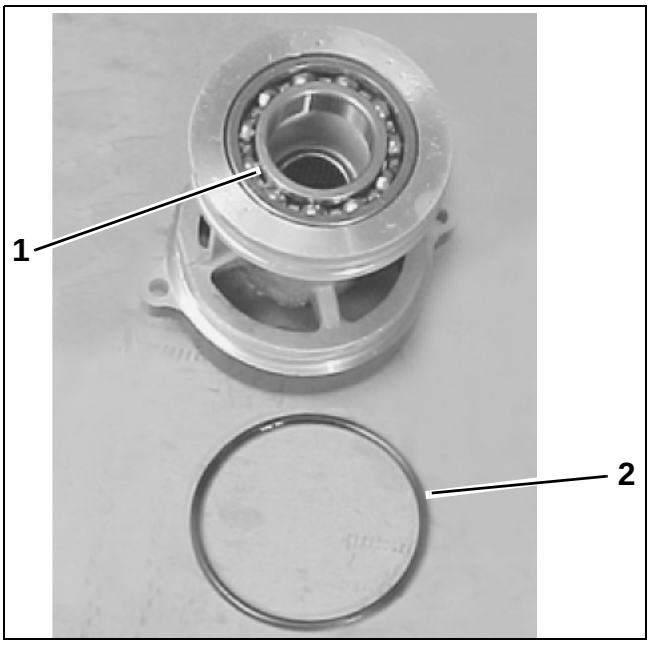

1. Reverse Gear bearing 001857
2. Propeller shaft bearing housing o-ring

Pinion Gear Bearing

To install pinion bearing, assemble tools from Universal Pinion Bearing Removal and Installation Kit, P/N 391257, bearing removal/installation kit, P/N 5000009, bearing removal/installation tool, P/N 5034763, and spacer, P/N 350932, as shown.

Place bearing installation tool with lettered side of bearing facing tool. Use *Needle Bearing* grease to hold bearing on tool.

Insert tool and bearing into gearcase. Using rawhide mallet, drive bearing into place until washer contacts spacer, P/N 350932.

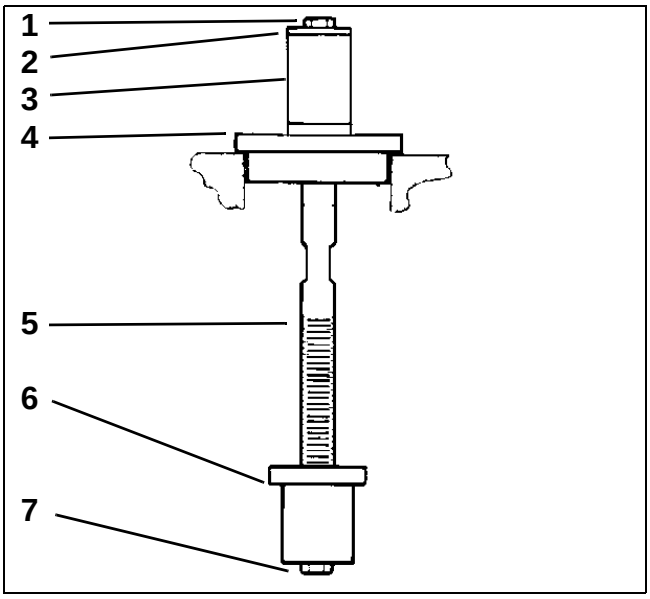

1. *1/4 - 20 x 1/2 in. Hex head screw* 824182
2. *1 in. O.D. Flat Washer*
3. *Spacer 350932*
4. *Centering Guide from tool kit 5000009*
5. *Rod, P/N 326582*
6. *Pinion gear bearing removal/installation tool, P/N 5034763*
7. *1/4 - 20 x 1 1/4 in. Hex head screw*

Driveshaft Bearing Housing Bearing Race and Seals

To install driveshaft bearing race, use bearing tool installation, P/N 342685, to press race until seated in housing

Apply *Triple-Guard* grease to the inner circumference of the housing and the lips of the **new** seals.

Place the seals in the housing (one at a time) with the lips facing away from the driveshaft bearing. Use oil seal installation obtained locally to seat seals into the bearing housing.

Install a **new** O-ring on the housing. Apply *Triple-Guard* grease to the O-ring after installation.

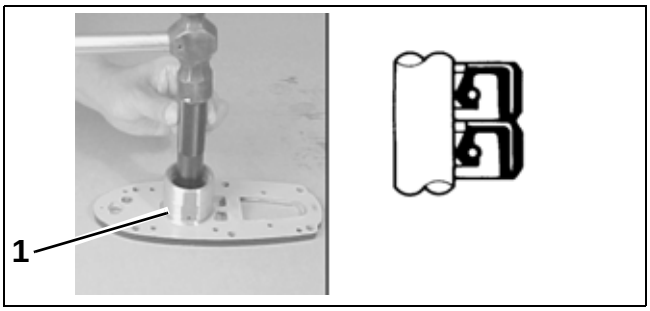

1. *O-ring* 001864

Forward Gear Bearing Race

Use bearing installation tool obtained locally to seat new bearing race fully into gearcase housing.

ASSEMBLY

Pre-Assembly Inspection

WARNING

To avoid personal injury, wear eye protection and set compressed air pressure to less than 25 psi (172 kPa).

Clean all gearcase components in solvent and dry them with compressed air.

Visually inspect all internal components for signs of wear, distortion, chipping, metal transfer, pitting, galling, and discoloration due to improper lubrication. Replace any damaged components.

Before installation, coat all internal components with *HPF XR* gearcase lubricant to prevent rusting.

Shift Rod Assembly

Install **new** O-rings on the shift rod guide. Apply *Triple-Guard* grease to the shift rod guide O-ring and the inside of the dust boot.

Slide the dust boot and the shift rod guide onto the shift rod, then install the shift rod pin.

Install the magnet and the spacer on the shift rod.

Install the shift rod cam on the shift rod, then insert the cam pin.

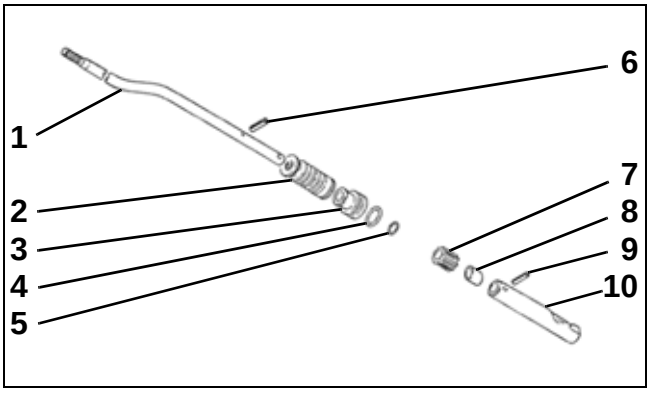

1. *Shift rod* 001872
2. *Boot*
3. *Shift rod guide*
4. *Guide O-ring (larger)*
5. *Shift rod O-ring (smaller)*
6. *Shift rod pin*
7. *Magnet*
8. *Spacer*
9. *Cam pin*
10. *Shift rod cam*

Install the stop on the shift rod guide.

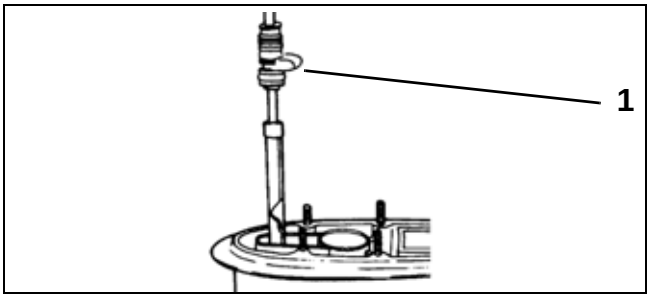

1. *Shift rod guide stop* 001860

Install the shift rod assembly in the gearcase.

IMPORTANT: Make sure that the stepped section of the shift rod cam faces toward the propeller shaft. Also make sure that the rear side of the shift

rod cam (with detent notch) is positioned over the detent ball in the gearcase.

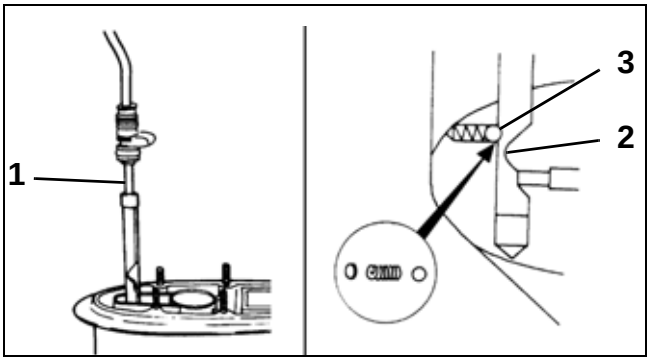

1. Shift rod 001873
2. Shift rod cam - stepped section
3. Detent ball

Secure the stop to the gearcase with two (2) screws.

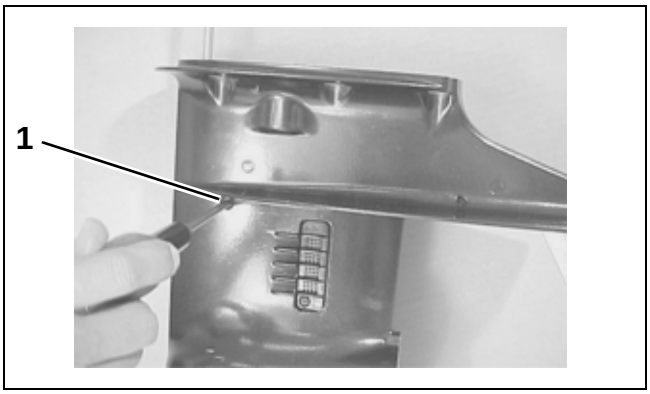

1. Screws (2) 001838

Driveshaft Assembly

Install the thrust washer and the preload spring on the driveshaft. Make sure that the end of the spring fits into the notch on the thrust washer.

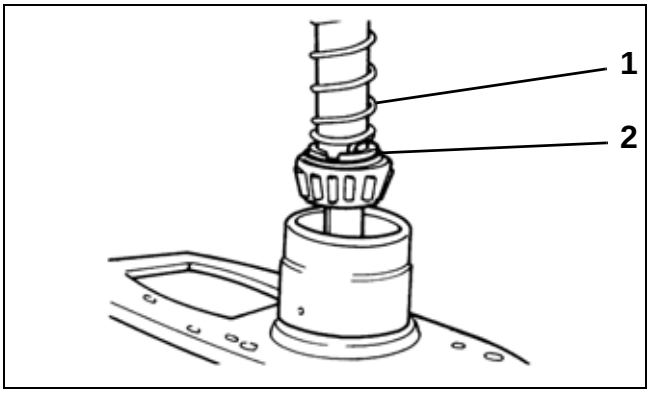

1. Preload spring 001874
2. Thrust washer

Place the tab lock washer and the other thrust washer in the preload spring collar. Make sure that the tab of the lock washer fits into the slot at the pinion gear end of the spring collar.

Slide the preload spring collar onto the driveshaft.

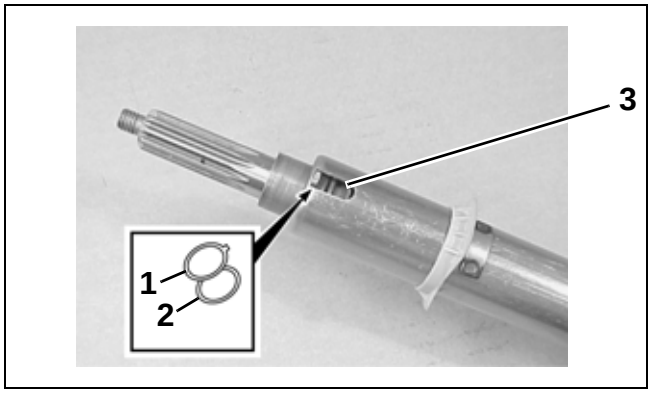

1. Tab lock washer 001878
2. Thrust washer
3. Slot

⚠ WARNING ⚠

When removing or installing any type of retaining rings, wear eye protection to avoid personal injury.

Install the driveshaft and the preload spring collar in the bearing housing. Firmly push down the collar and secure the collar to the housing with the retaining ring.

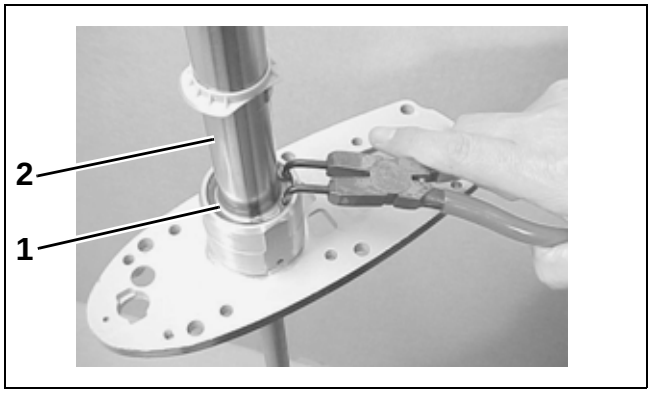

1. Retaining ring 001879
2. Preload spring collar

Pinion Gear and Driveshaft Installation

Install the pinion shim from the gearcase.

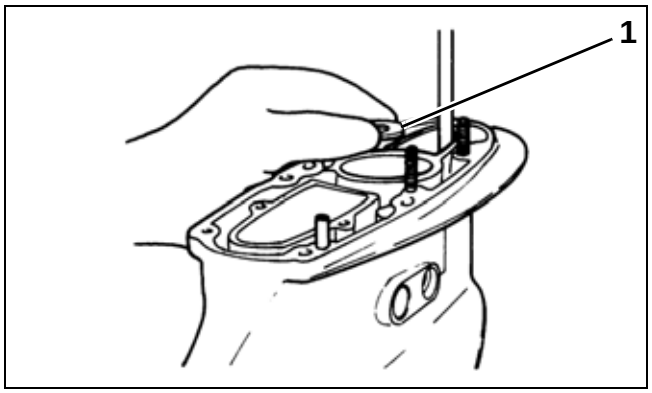

1. Pinion shim 001838

Install the pinion gear in the gearcase.

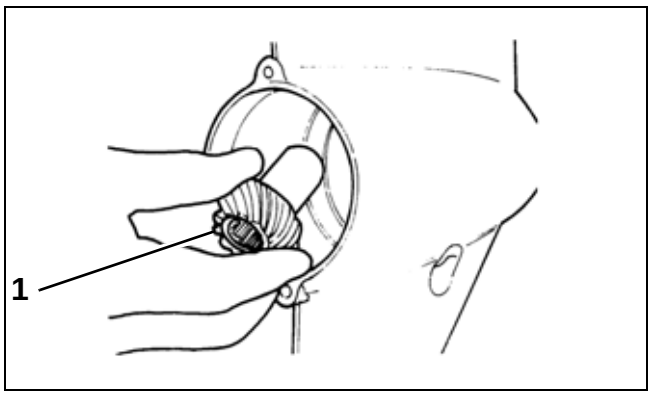

1. Pinion gear 001870

Install the forward gear bearing and the shim in the gearcase, then install the forward gear.

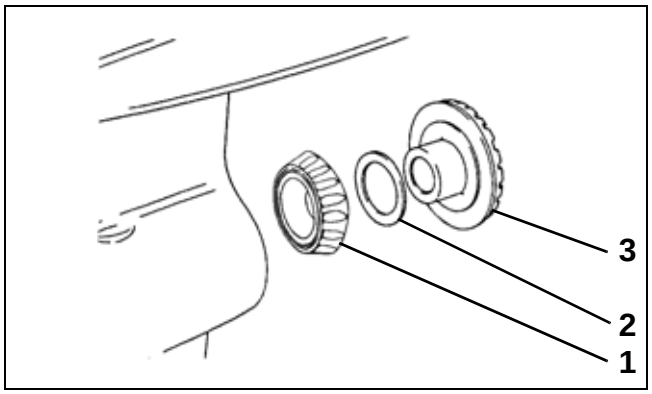

1. Forward gear bearing 001871
2. Shim
3. Forward gear

IMPORTANT: Before completing this installation procedure, check the forward gear to pinion gear backlash, the tooth contact pattern, and the initial driveshaft thrust play. Refer to “SHIMMING AND GEAR BACKLASH CHECKS” on page 220 for these procedures.

Apply *Gasket Sealing Compound* to the mating surfaces of the gearcase and the driveshaft bearing housing. Then install the complete driveshaft and bearing housing assembly to the gearcase.

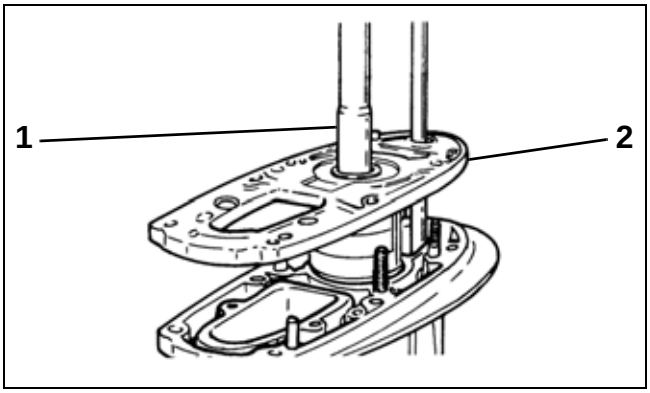

1. Driveshaft 001836
2. Bearing housing

Install two (2) bolts that secure the driveshaft bearing housing to the gearcase.

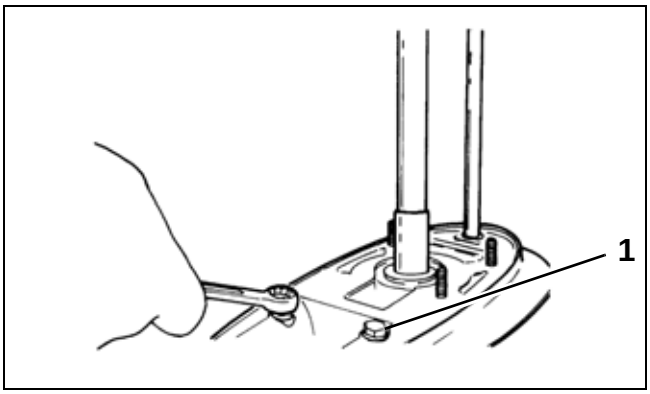

1. Bolts (2) 001834

Apply *Nut Lock* to the threads of the pinion nut. Fit a driveshaft holder to the top end of the driveshaft,

then install the pinion nut on the other end. Tighten the nut to a torque of 13 ft. lbs. (18 N·m).

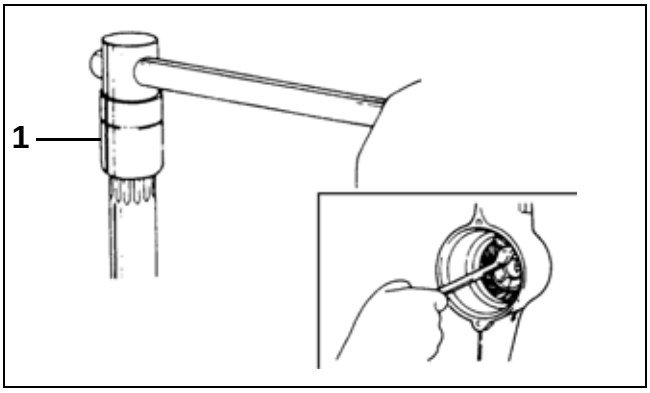

1. Driveshaft holder, P/N 345834 001833

Propeller Shaft Assembly

Check the return spring by measuring its free length. If free length is not within specifications, replace the return spring.

Return Spring Free Length	
Standard	2.30 in. (58.5 mm)
Service limit	2.22 in. (56.5 mm)

Slide the clutch dog shifter onto the propeller shaft. Make sure that the side that is marked with an “F” will face toward the forward gear.

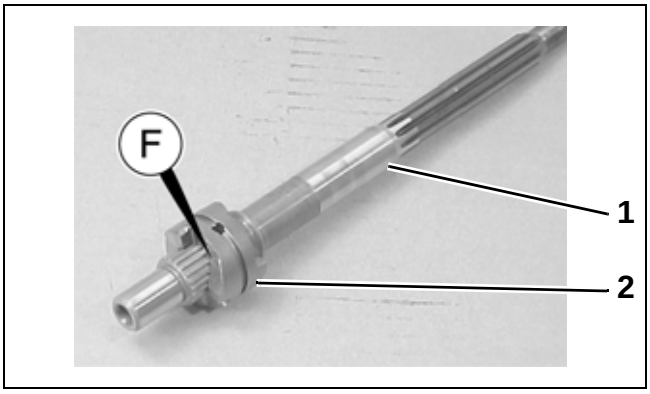

1. Propeller shaft 001881
2. Clutch dog shifter

Insert the return spring, the push pin, and the push rod into the propeller shaft.

Align the holes in the clutch dog shifter and the push pin. Depress the push rod and slide the clutch dog shifter pin through the clutch dog shifter and the push pin.

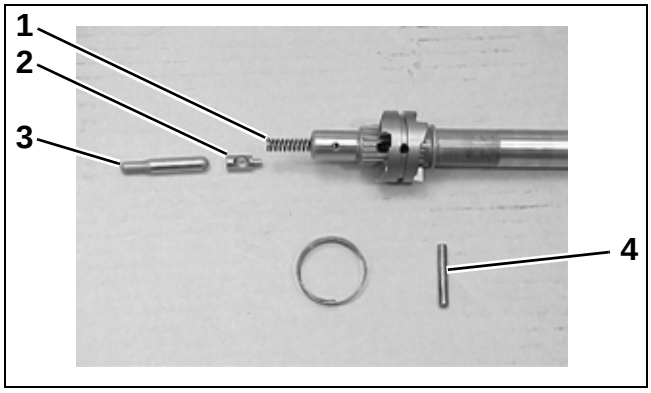

1. Return spring 001882
2. Push pin
3. Push rod
4. Dog pin

Install a **new** clutch dog shifter pin spring. Make sure that the spring fits snugly into the groove on the clutch dog shifter.

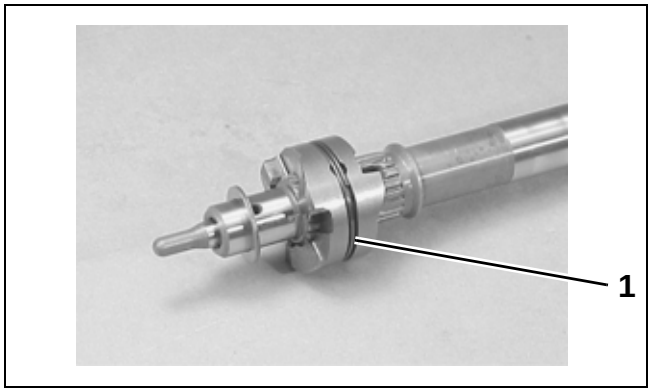

1. Clutch dog pin spring 001843

Install the forward gear thrust washer, the reverse gear thrust washer, the reverse gear, the shim, and the propeller shaft bearing housing.

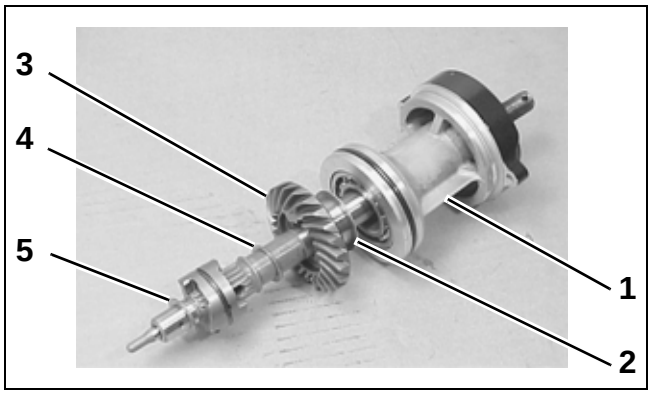

1. *Propeller shaft bearing housing* 001883
2. *Shim*
3. *Reverse gear*
4. *Reverse gear thrust washer*
5. *Forward gear thrust washer*

Propeller Shaft Bearing Housing Installation

IMPORTANT: Before installing the propeller shaft and bearing housing assembly, move the shift cam to the forward position by moving the shift rod up or down.

Apply *Triple-Guard* grease to the O-ring and the push rod.

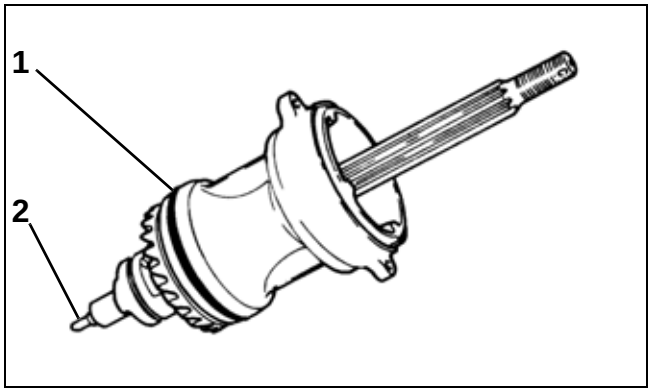

1. *O-ring* 001884
2. *Push rod*

Install propeller shaft bearing housing.

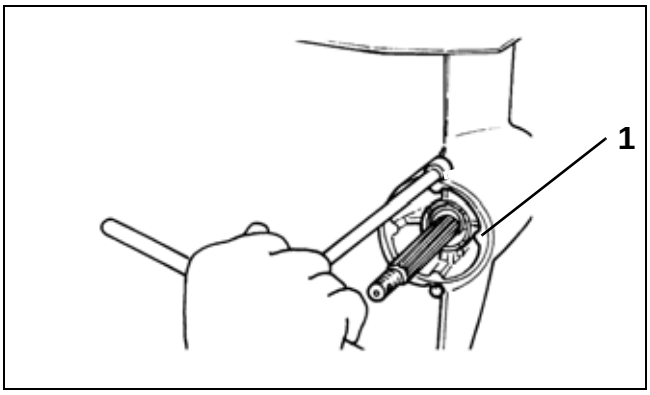

1. *Propeller shaft bearing housing* 001829

When the bearing housing is fully seated, install and tighten two (2) bolts to a torque of 71 in. lbs. (8 N·m).

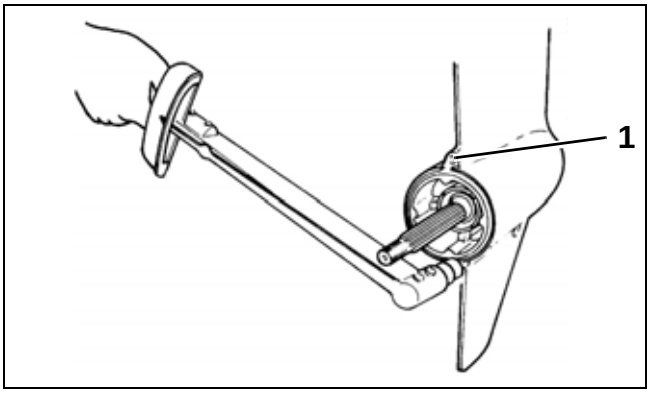

1. *Bolts (2)* 001886

Check the driveshaft thrust play again. Refer to “Checking the Driveshaft Thrust Play” on page 222.

Check the propeller shaft thrust play. Refer to “Checking the Propeller Shaft Thrust Play” on page 223.

SHIMMING AND GEAR BACKLASH CHECKS

If the gearcase has been rebuilt or any internal components have been replaced, the gears must be properly shimmed and adjusted to ensure smooth, reliable operation of the gears.

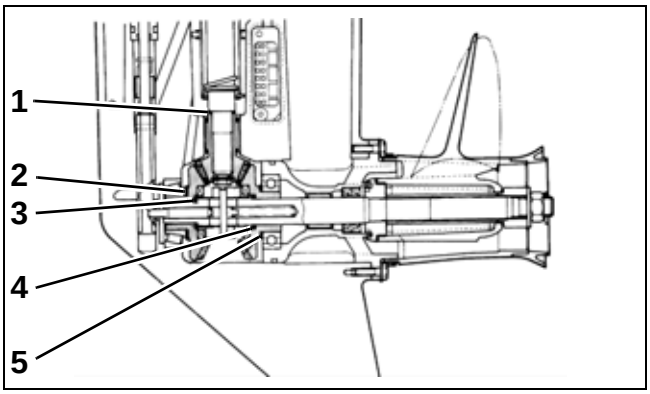

1. Pinion gear shim 001901
2. Forward gear shim
3. Forward gear thrust washer
4. Reverse gear thrust washer
5. Reverse gear shim

Item	Available thickness (mm)	Design spec thickness (mm)
Pinion gear shim	1.7, 1.8, 1.9, 2.0, 2.1, 2.2	2.0
Forward gear shim	0.8, 0.9, 1.0, 1.1, 1.2, 1.3, 1.4, 1.5	1.2
Forward gear thrust washer	2.0	2.0
Reverse gear thrust washer	1.6, 1.8, 2.0, 2.2, 2.4, 2.6	2.0
Reverse gear shim	0.2, 0.5, 0.8, 1.0	1.5

Checking the Forward Gear-to-Pinion Gear Backlash

Install the driveshaft and bearing housing assembly **without** *Gasket Sealing Compound*.

Install and tighten the pinion nut **without** *Nut Lock* to a torque of 13 ft. lbs. (18 N·m).

Temporarily fasten the driveshaft bearing housing to the gearcase using two (2) bolts and nuts placed through the two diagonally opposite gearcase mounting holes.

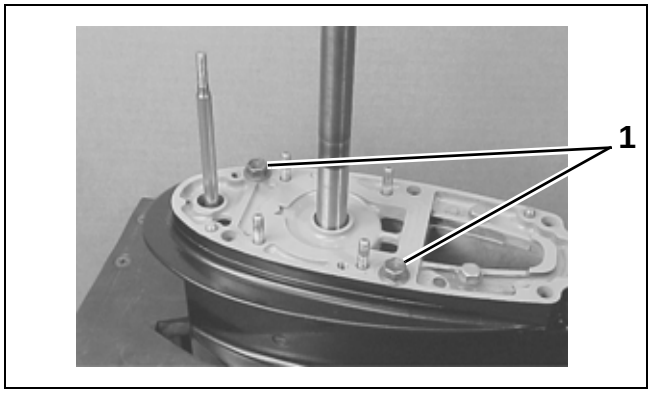

1. Bolts (2) 001888

Hold the pinion gear by hand, then gently rock the forward gear back and forth by hand.

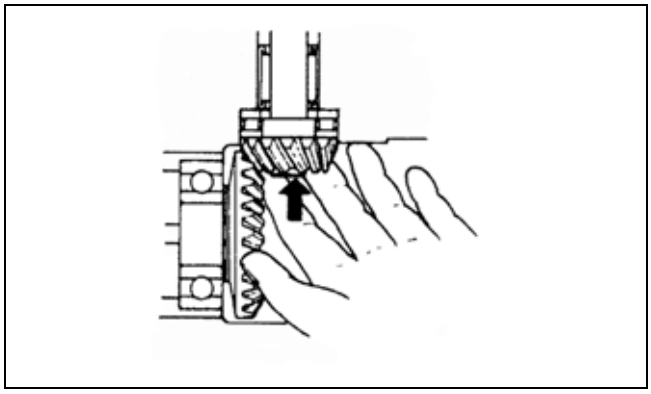

001902

Forward Gear to Pinion Gear Backlash
0.004 – 0.008 in. (0.10 – 0.20 mm)

- If the backlash is greater than the specification, the thickness of the forward gear shim must be increased.
- If the backlash is less than the specification, the thickness of the forward gear shim must be decreased.

Checking the Tooth Contact Pattern

Apply a light coat of Gear Mark Compound, P/N 772666, on the convex surface of the forward gear.

Install the propeller shaft and bearing housing assembly **without** the reverse gear and internal components.

Push the propeller shaft inward and hold it in position.

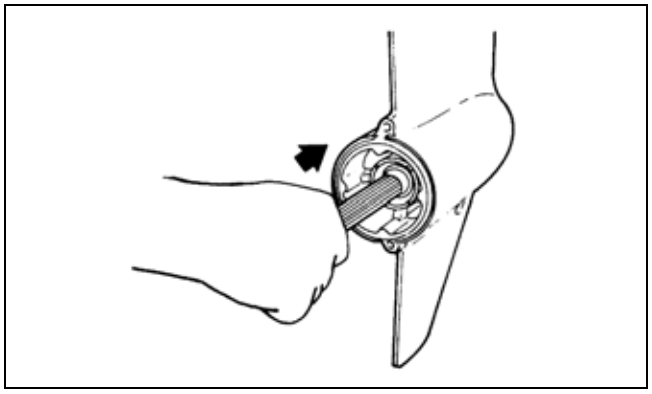

001905

Use a driveshaft holder to rotate the driveshaft five or six times.

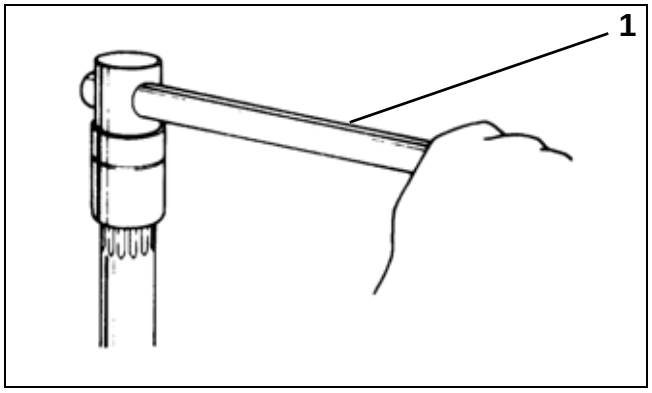

1. Driveshaft holder, P/N 345834 001904

Carefully pull out the propeller shaft and bearing housing to check the tooth contact pattern.

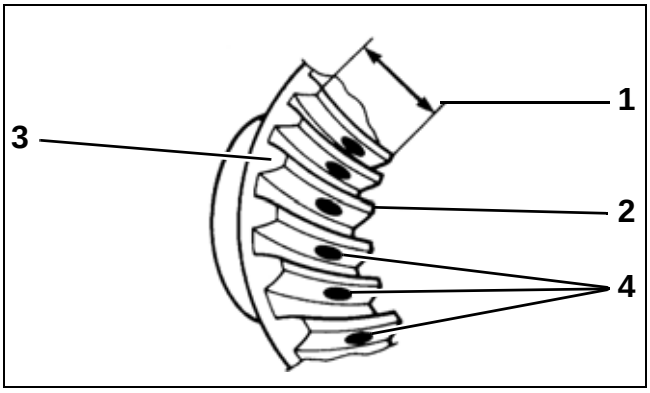

1. Tooth width 001906
2. Toe
3. Heel
4. Tooth contact pattern

Optimum Tooth Contact

A shim adjustment may be necessary to obtain this contact pattern. After adjusting the shim thickness, check the tooth contact pattern again.

Width of contact area	1/3 of total tooth width
Top of tooth to contact area	0.04 in. (1 mm)

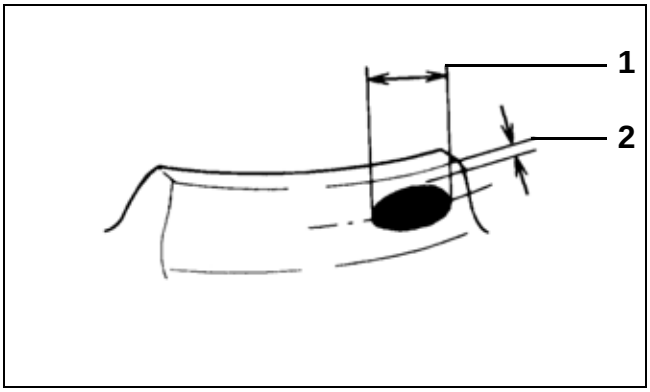

1. Width of contact area 001907
2. Top of tooth to contact area

Incorrect Top Side Toe Contact

CAUTION

Do not set the tooth contact to this pattern. Damage to the gears may result.

To correct this tooth contact pattern, either decrease the thickness of the forward gear shim or slightly increase the thickness of the pinion gear shim.

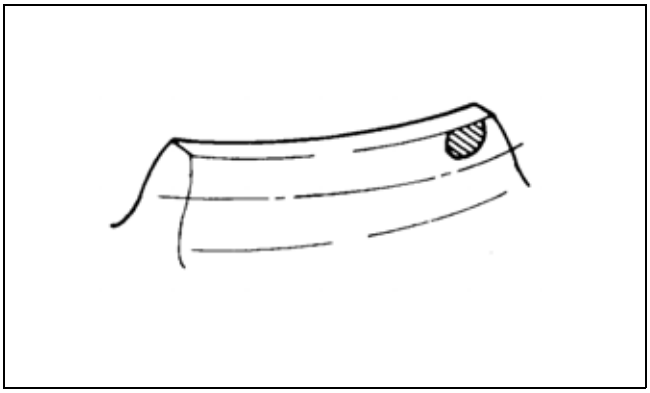

001908

Incorrect Bottom Side Toe Contact

CAUTION

Do not set the tooth contact to this pattern. Damage to the gears may result.

To correct this tooth contact pattern, either increase the thickness of the forward gear shim or slightly decrease the thickness of the pinion gear shim.

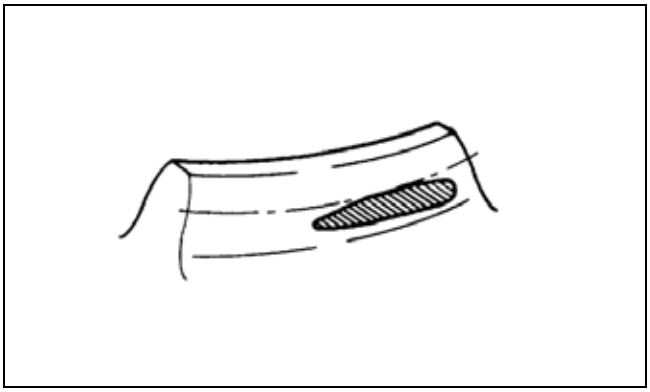

001909

Checking the Driveshaft Thrust Play

Initial Check

After obtaining the optimum tooth contact, measure the driveshaft thrust play.

Install a gear adjusting gauge to the driveshaft.

Slowly push the driveshaft downward. Record the maximum gauge reading. Designate this measurement as **A**.

The actual driveshaft thrust play should be 0.008 – 0.016 in. (0.20 – 0.40 mm).

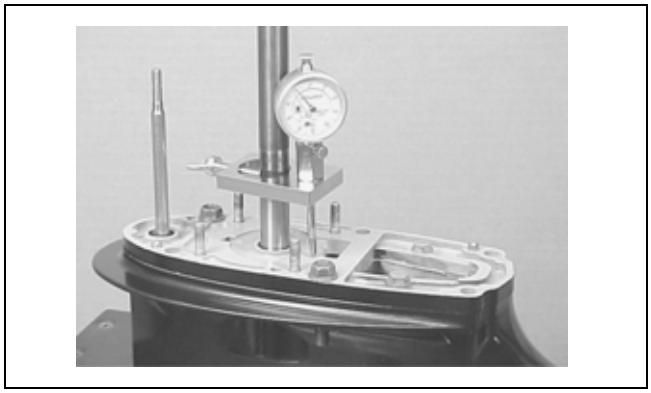

001880

Final Check

IMPORTANT: Measurement **A** from the initial check must be known to adjust the shim thickness for the reverse gear.

After adjusting the forward gear tooth contact pattern, assemble and install the propeller shaft and bearing housing assembly with the reverse gear and any related components.

Thread the sliding hammer onto the propeller shaft and strike a few gentle outward taps.

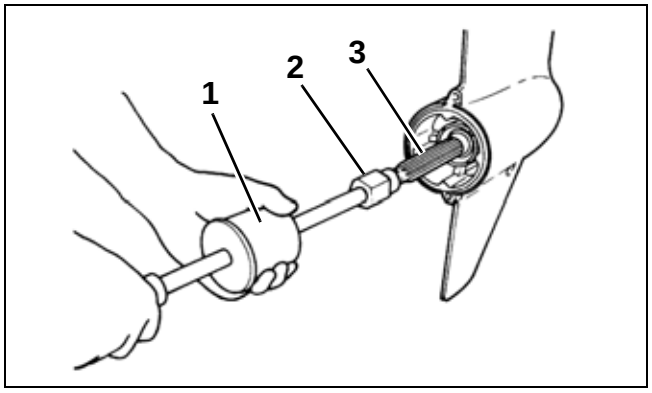

1. Sliding hammer, P/N 391008
2. Propeller shaft removal, P/N 5034762
3. Propeller shaft

001830

Install a gear adjusting gauge to the driveshaft.

Slowly push the driveshaft downward. Record the maximum gauge reading. Designate this measurement as **B**.

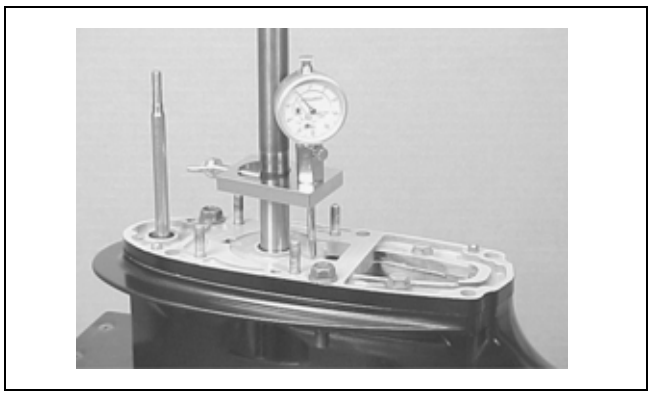

001880

Compare measurements **A** an **B**.

- If the measurements are equal, the shim thickness for the reverse gear is correct.
- If **B** is less than **A**, decrease the shim thickness for the reverse gear.

Checking the Propeller Shaft Thrust Play

After adjusting all gear positions, measure the propeller shaft thrust play.

IMPORTANT: Maintain the forward gear thrust washer at the standard thickness. Adjust only the reverse gear thrust washer.

Install a gear adjusting gauge to the propeller shaft.

Push the propeller shaft inward. Hold the shaft in and set the dial gauge to zero.

Slowly pull the propeller shaft outward. Record the maximum gauge reading.

The actual propeller shaft thrust play should be 0.008 to 0.016 in. (0.20 to 0.40 mm).

- If the measurement is greater than the specification, increase the thickness of the reverse gear thrust washer.
- If the measurement is less than the specification, decrease the thickness of the reverse gear thrust washer.

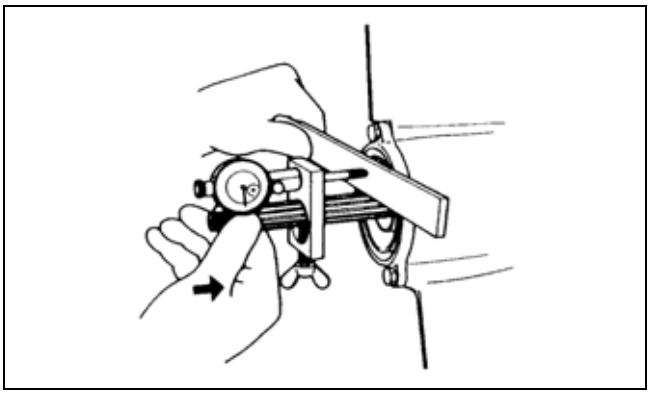

001887

NOTES

Technician's Notes

Related Documents

Bulletins	
Instruction Sheets	
Other	

POWER TRIM AND TILT

TABLE OF CONTENTS

SYSTEM WIRING 226
WIRING DIAGRAM 226
TESTING THE PTT MOTOR RELAY 227
SERVICE PROCEDURES 228
CHECKING THE OIL LEVEL 228
BLEEDING THE AIR 228
POWER TRIM AND TILT (PTT) UNIT 229
REMOVAL 229
INSTALLATION 230
PTT MOTOR 232
REMOVAL 232
DISASSEMBLY 233
INSPECTION 233
ASSEMBLY 235
INSTALLATION 235
OPERATION 237
TRIM TILT “UP” CIRCUIT 238
TRIM/TILT “DOWN” CIRCUIT 239
SHOCK ABSORBER CIRCUIT 240
MANUAL RELEASE CIRCUIT (MANUAL VALVE) 241
THERMAL VALVE 242

SYSTEM WIRING

Wiring Diagram

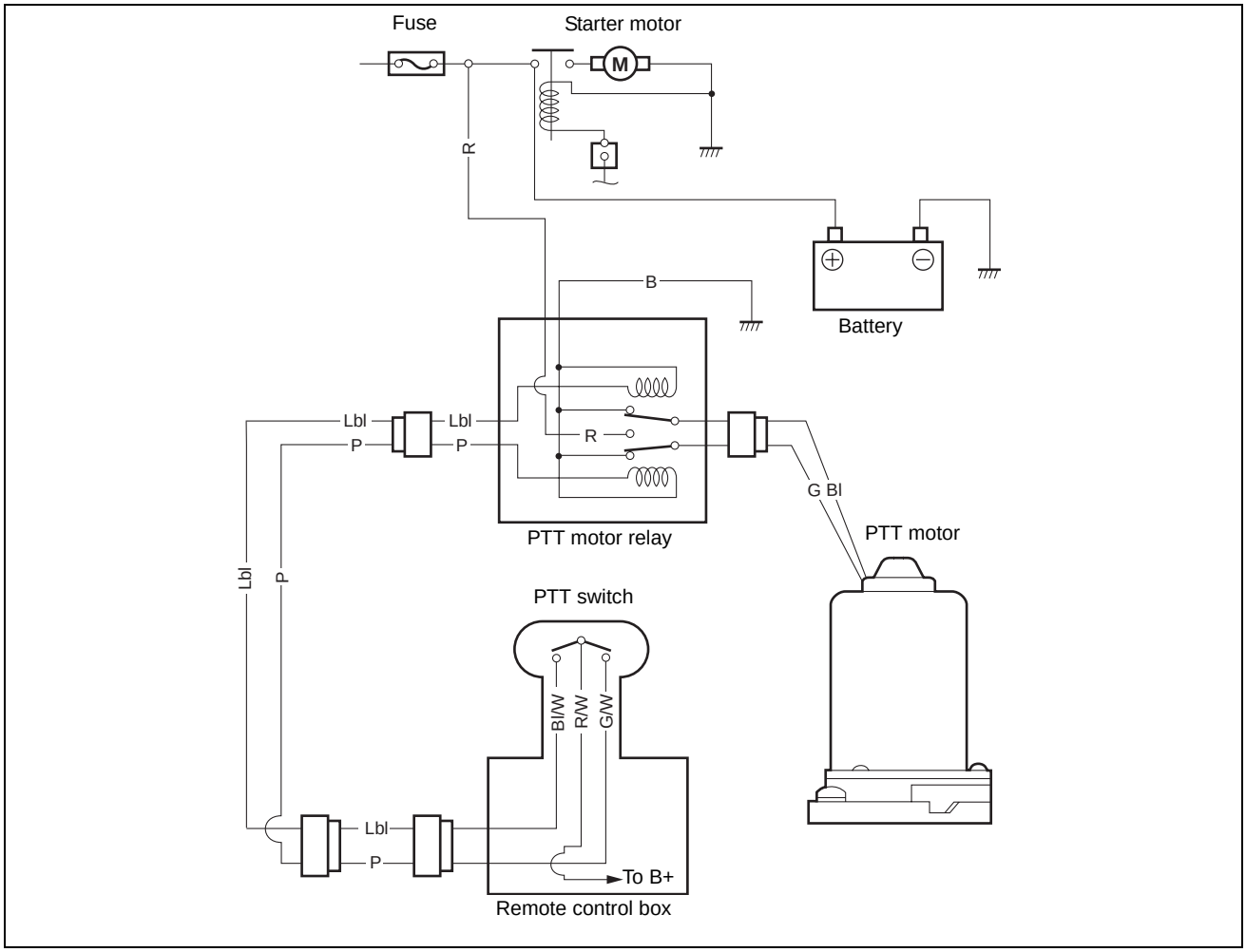

004353

Testing the PTT Motor Relay

Disconnect the battery cables at the battery.

Disconnect all cables/lead wires from PTT relay.

Use a digital tester to measure the resistance between each two leads of the relay.

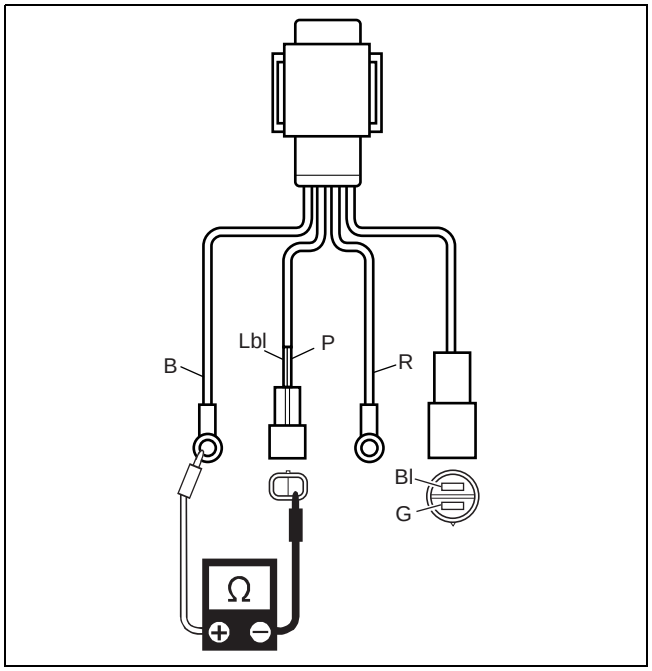

00I00920

Tester probe connections
Between “P” wire and “B” wire: 25 – 37 Ω
Between “Lbl” wire and “B” wire: 25 – 37 Ω

Connect “R” wire of the relay to the positive (+) terminal of a 12V battery, and “B” wire to negative (–) terminal.

IMPORTANT: Each of the following operations must be performed within 3 – 5 seconds to avoid overheat damage to the relay coil.

Temporarily connect a jumper wire from the “P” lead wire to the battery positive (+) terminal, then check the voltage between “G” wire and “B” wire.

Between “G” wire and “B” wire: 12 V (Battery voltage)

Temporarily connect a jumper wire from the “Lbl” lead wire to the battery positive (+) terminal, then check the voltage between “Bl” wire and “B” wire.

Between “Bl” wire and “B” wire: 12 V (Battery voltage)

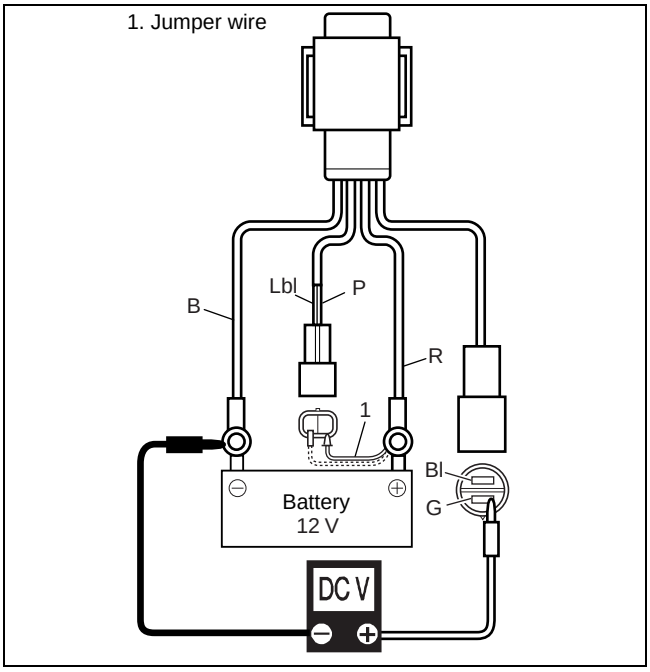

00I00930

SERVICE PROCEDURES

Checking the Oil Level

Raise the engine to the full tilt position.

Lower the manual tilt lock levers.

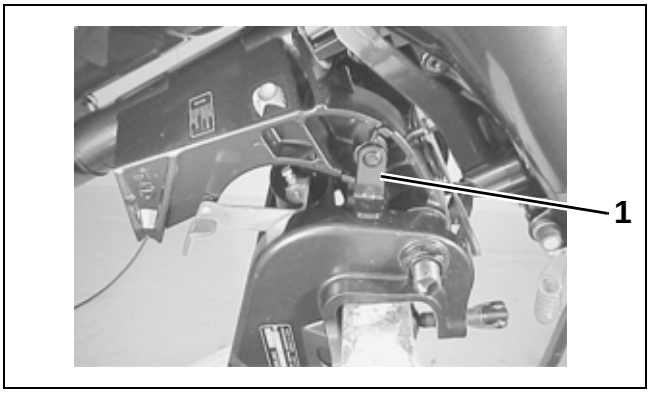

1. Manual tilt lock lever (2) 001749

Remove the reservoir plug and the oil level plug.

If oil can be seen at level plug hole, the reservoir is full. If the oil level is low, fill the reservoir with Dexron III automatic transmission fluid or an equivalent.

IMPORTANT: To ensure consistent pump operation, DO NOT mix different types of oil.

Install oil level plug and reservoir plug.

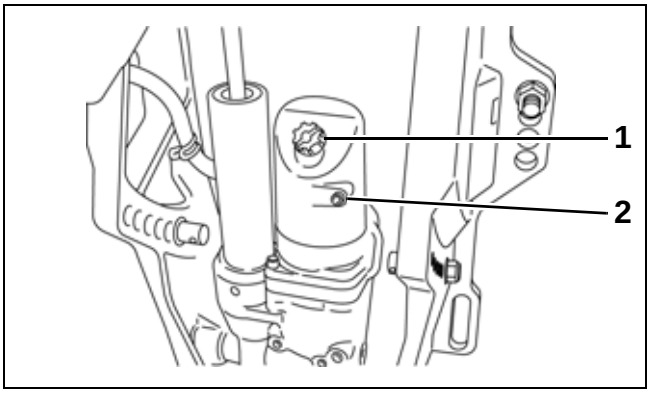

1. Reservoir plug 001911
2. Oil level plug

Bleeding the Air

Check that the manual release valve is tightened to a torque of 16 in. lbs. (1.8 N·m). Turn the valve clockwise to close the valve. DO NOT overtighten the valve.

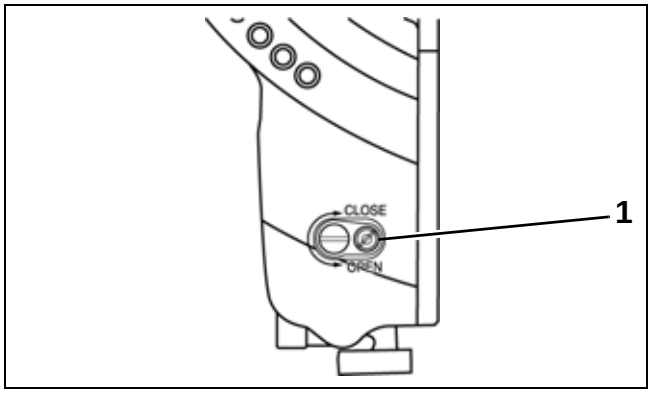

1. Manual release valve 001912

Raise the manual tilt lock levers. Operate the PTT switch to raise and lower the motor four or five times from the full tilt position to the full trim down position.

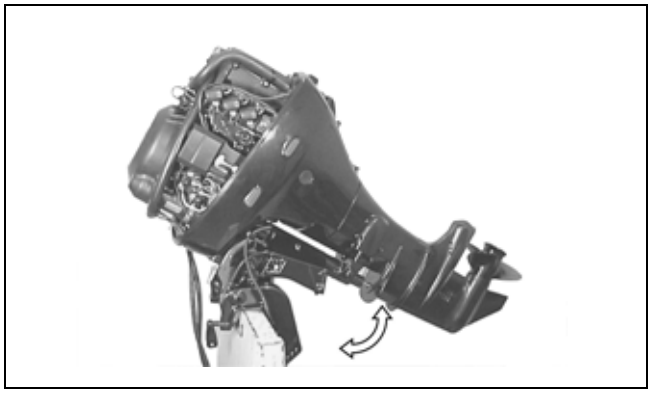

001913

Check the oil level. Top off the oil in the reservoir, if necessary. Refer to “Checking the Oil Level” on page 228.

POWER TRIM AND TILT (PTT) UNIT

Removal

Raise the engine to the full tilt position and lower the manual tilt lock levers.

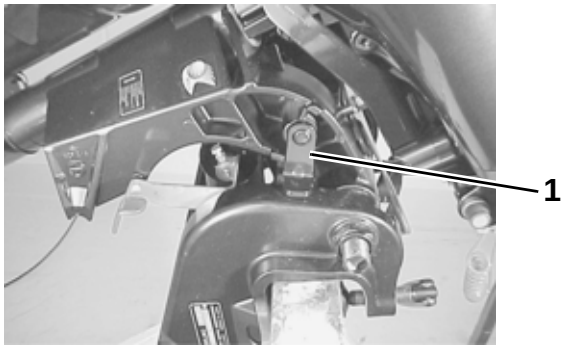

1. Manual tilt lock lever (2) 001749

WARNING

During service, the outboard may drop unexpectedly. To avoid personal injury, always support the outboard's weight with a suitable hoist.

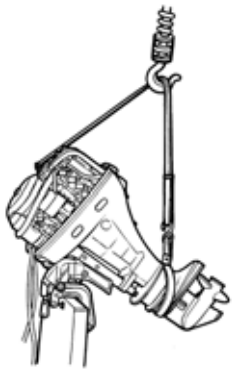

001731

WARNING

When removing or installing any type of retaining rings, wear eye protection to avoid personal injury.

Remove the E-ring, then push out the tilt rod upper shaft.

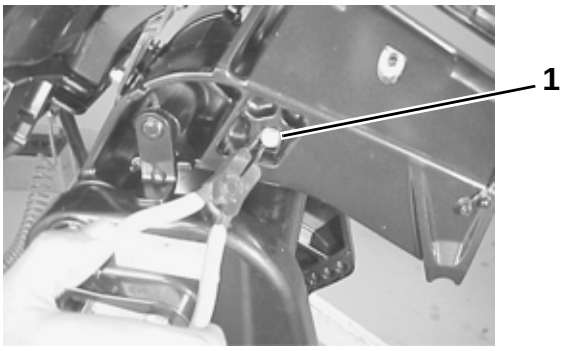

1. Tilt rod upper shaft 001750

Remove two (2) bushings from the end of the tilt cylinder rod.

Lower the tilt cylinder rod to the full down position, then disconnect the battery cable.

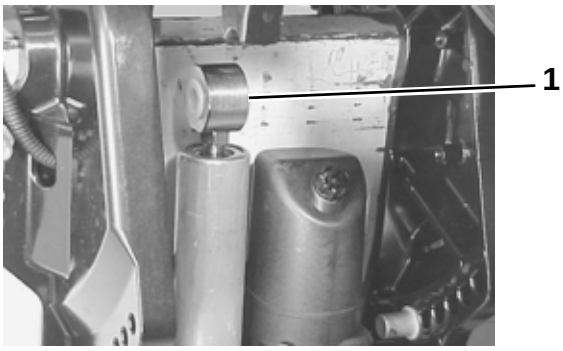

1. Tilt cylinder rod 001914

Disconnect the PTT motor cable wire leads (green and blue) from the PTT relay.

Remove the PTT motor cable from the engine lower cover.

Remove the two (2) starboard stern bracket nuts and bolts.

Loosen the starboard clamp screw and the tilt tube nut.

IMPORTANT: Complete removal of the tilt tube nut is not required. The nut should only be loosened as far as the end of the shaft threads to facilitate removal of the PTT unit.

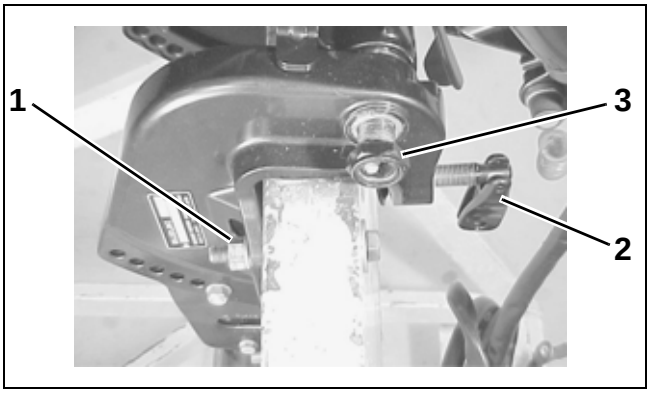

1. *Stern bracket nut (2)* 001751
2. *Clamp screw*
3. *Tilt tube nut*

Remove the tilt cylinder shaft bolts.

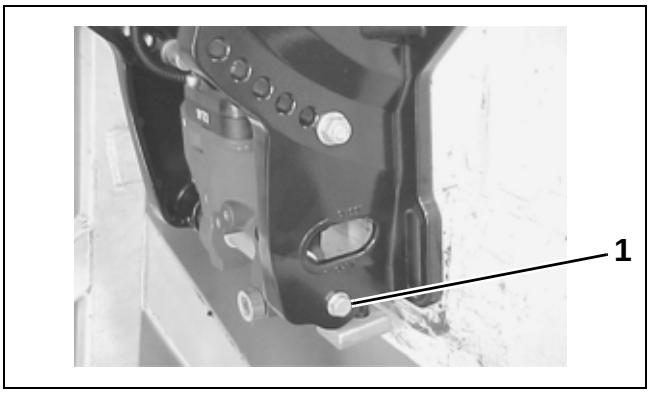

1. *Tilt cylinder shaft bolts (2)* 001916

Slide the starboard stern bracket fully outward to the right side. Remove the PTT unit from between the stern brackets.

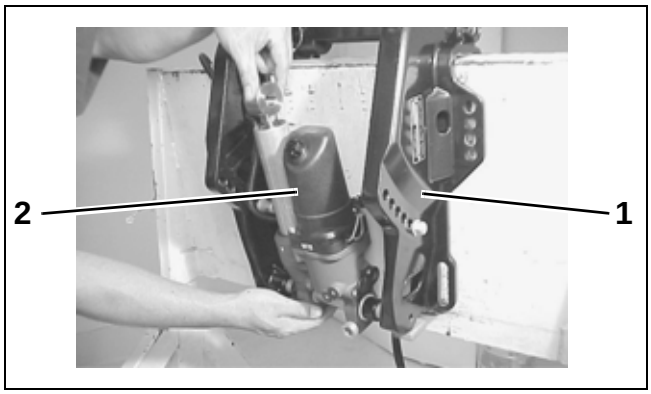

1. *Stern bracket* 001917
2. *PTT unit*

Installation

Lower the tilt rod to the full down position.

Apply *Triple-Guard* grease to the tilt cylinder lower shaft and the tilt cylinder shaft bushings. Install the bushings, shaft, and spacers on the PTT unit.

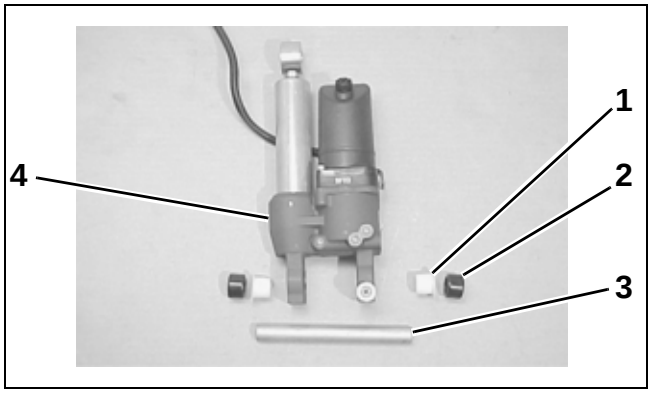

1. *Bushings (2)* 001934
2. *Spacers (2)*
3. *Tilt cylinder lower shaft*
4. *PTT unit*

Position the PTT unit between the stern brackets. Install and tighten the tilt tube nut to a torque of 31 ft. lbs. (43 N·m).

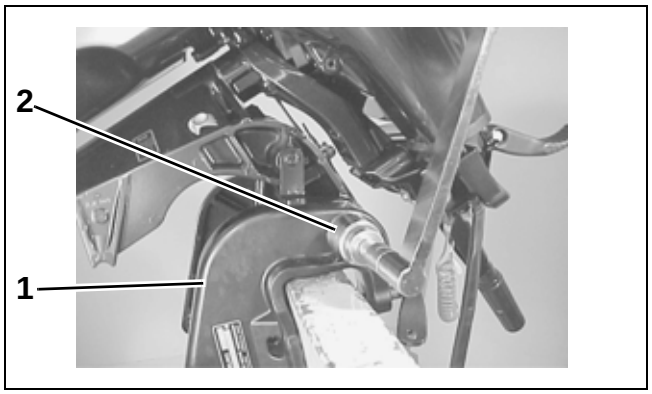

1. Stern bracket 001759
2. Tilt tube nut

Apply *Nut Lock* to the threads of the tilt cylinder shaft bolts. Install and tighten the bolts to a torque of 16.5 ft. lbs. (23 N·m).

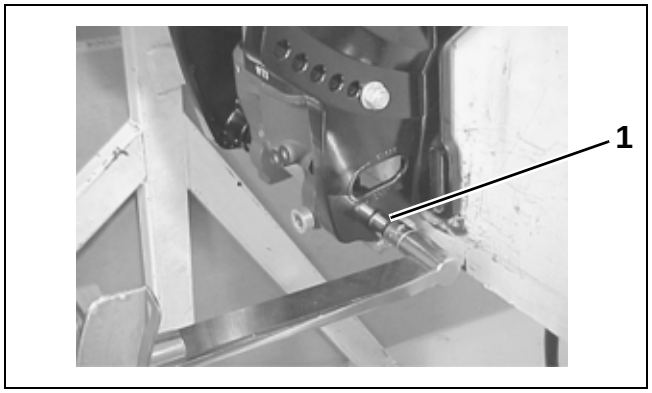

1. Tilt cylinder shaft bolts (2) 001935

Apply *Triple-Guard* grease to the tilt rod upper bushings, then install the bushings in the end of the tilt cylinder rod.

Operate the PTT motor to extend the tilt cylinder rod. Align the tilt cylinder rod with the hole in the swivel bracket as the tilt rod extends.

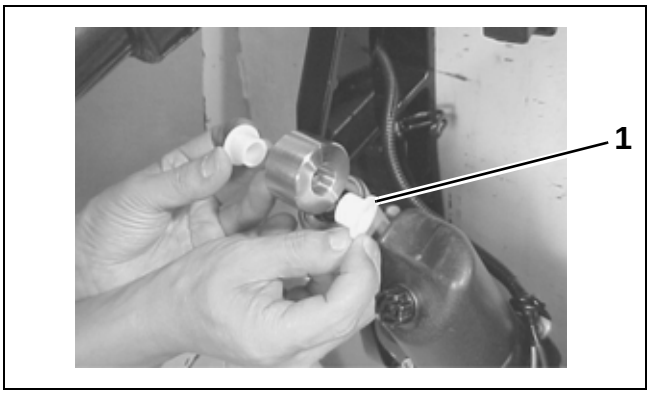

1. Bushings (2) 001936

WARNING

When removing or installing any type of retaining rings, wear eye protection to avoid personal injury.

Apply *Triple-Guard* grease to the tilt rod upper shaft, then insert the shaft through the swivel bracket and the tilt cylinder rod.

Secure the tilt rod upper shaft with the E-ring.

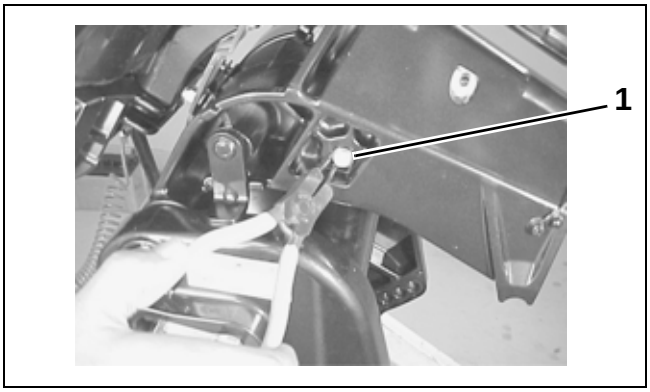

1. Tilt cylinder upper shaft 001750

Route the PTT motor cable through the lower cover. Refer to the **WIRE AND HOSE ROUTING** section. Connect the lead wires to the PTT relay.

PTT MOTOR

Removal

WARNING

To avoid personal injury, wear eye protection and set compressed air pressure to less than 25 psi (172 kPa).

IMPORTANT: Before removing the motor from the PTT unit, wash the outside of the unit with a stiff bristle brush and hot, soapy water to remove sand or dirt. Dry the unit with compressed air.

First, remove the PTT unit from the engine. Refer to “POWER TRIM AND TILT (PTT) UNIT” on page 229.

Unscrew the reservoir plug and drain the PTT motor oil into a suitable container.

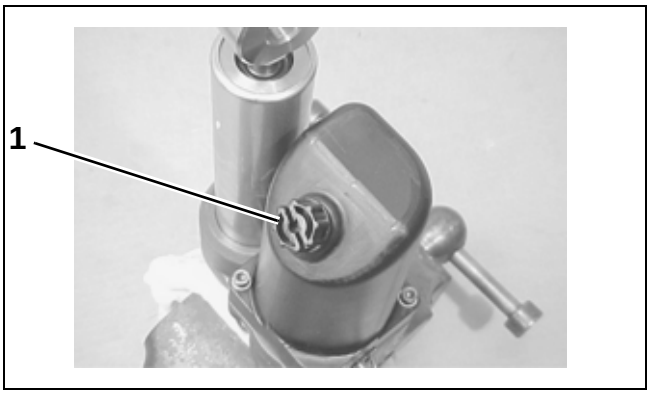

1. Reservoir plug 001918

CAUTION

To prevent damage to the PTT unit, use wood blocks or vise jaw protectors between the vise jaws and PTT unit before tightening the vise.

Place the lower mounting eye of the PTT unit in a vise. Tighten the vise only enough to secure the PTT unit. DO NOT overtighten the vise.

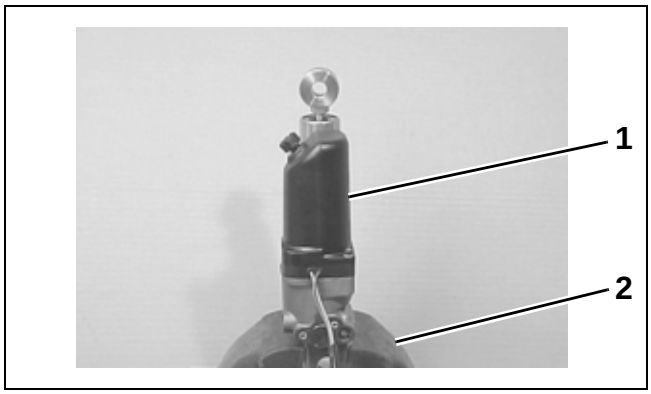

1. PTT unit 001919
2. Vise

Remove two (2) screws and the reservoir.

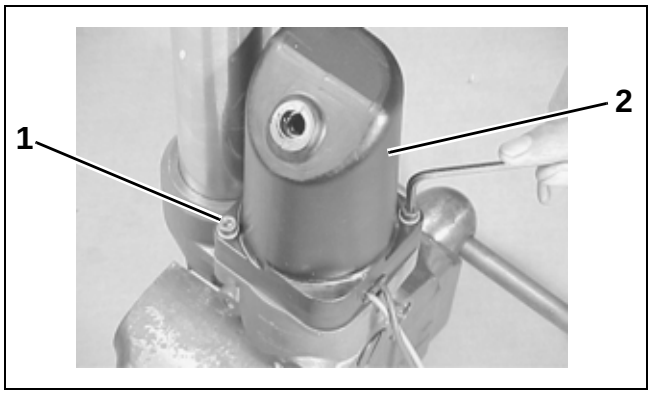

1. Screws (2) 001920
2. Reservoir

Remove the PTT motor from the pump.

Note the positions of the drive joint and the O-ring, then remove the components.

IMPORTANT: DO NOT lay out the PTT components on a rag. Dirt or lint may be transferred to

these components, which may cause system operating problems.

1. PTT motor
2. Drive joint
3. O-ring

001921

Disassembly

IMPORTANT: For correct assembly, scribe an alignment mark across the motor case and brush holder.

Remove two (2) screws that secure the motor case to the brush holder.

Use a soft face hammer to gently tap the motor case from side to side to unseat it from the brush holder. Slide the motor case upward and away from the brush holder.

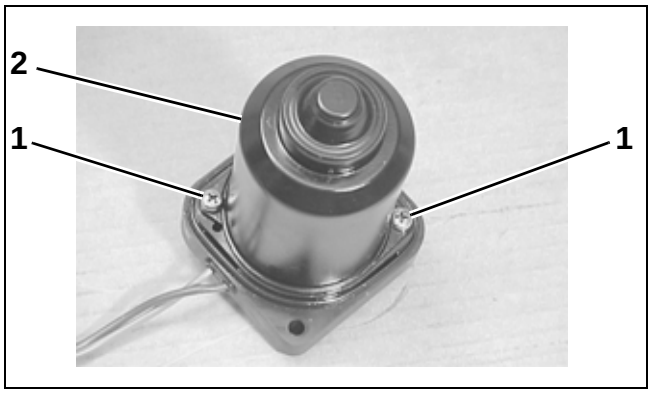

1. Screws (2)
2. Motor case

001922

Slide the armature free of the brushes.

Note the position of the O-ring on the brush holder. Remove the O-ring.

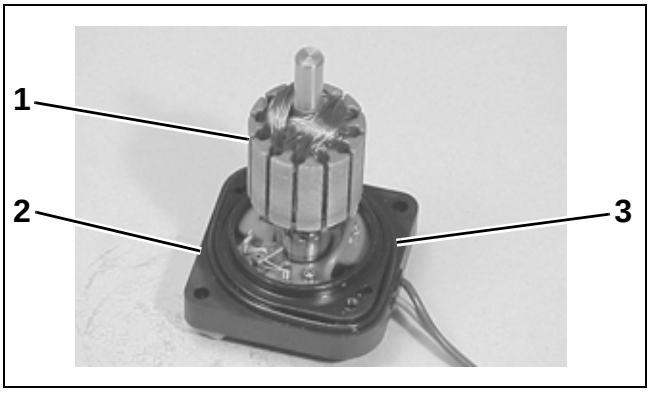

1. Armature
2. Brush holder
3. O-ring

001929

Inspection

Armature and Commutator

Use a digital tester to check for continuity between the commutator and the armature core/shaft. Replace the armature if continuity is indicated.

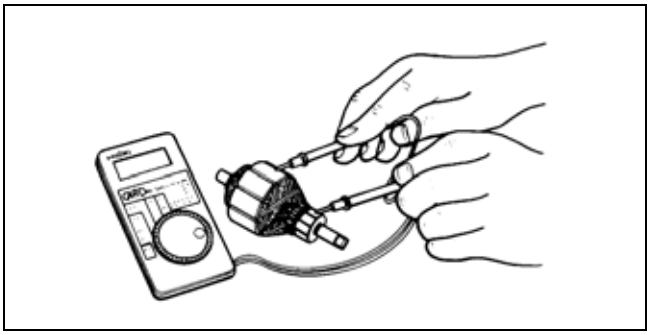

001924

Check for continuity between the adjacent commutator segments. Replace the armature if no continuity is indicated.

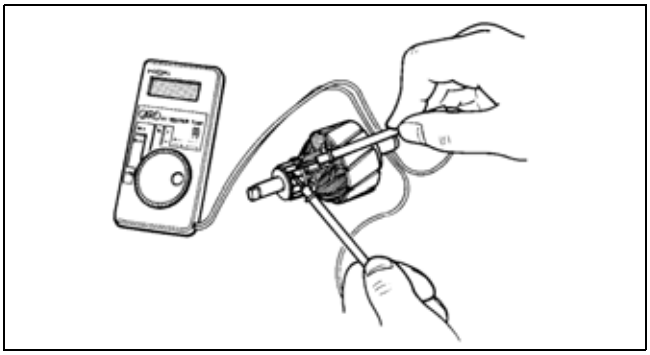

001925

Inspect the surface of the commutator. If the surface is gummy or dirty, clean the surface with 400 grit emery paper.

Use vernier calipers to measure the outside diameter of the commutator.

Commutator Outside Diameter	
Standard	0.77 in. (19.5 mm)
Service limit	0.73 in. (18.5 mm)

If the measurement exceeds the service limit, replace the armature.

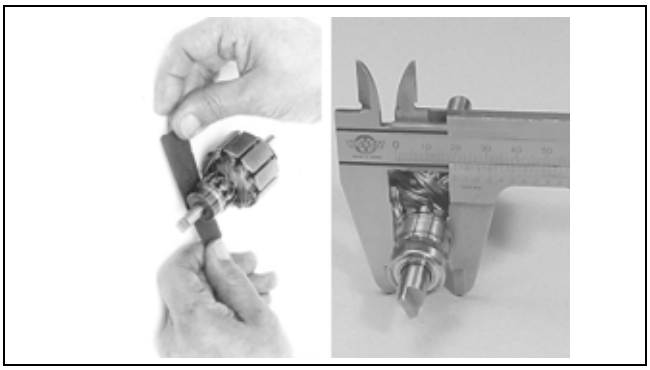

001926

Make sure that the mica (insulator) between the segments is undercut to the correct depth.

Commutator Undercut	
Standard	0.05 to 0.06 in. (1.3 to 1.6 mm)
Service limit	0.02 in. (0.5 mm)

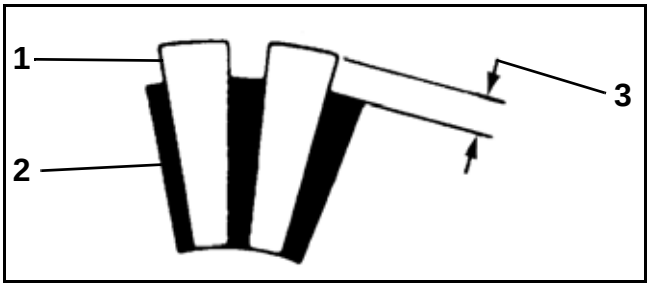

001714

1. *Segment*
2. *Mica*
3. *Undercut*

⚠ WARNING ⚠

To avoid personal injury, wear eye protection and set compressed air pressure to less than 25 psi (172 kPa).

If the undercut is less than the service limit, cut the mica to the specified depth. Use compressed air to remove all particles of mica and metal.

Brushes

Use vernier calipers to check the length of each brush.

Brush Length	
Standard	0.39 in. (9.8 mm)
Service limit	0.19 in. (4.8 mm)

If the brushes are worn down to the service limit, replace the brushes.

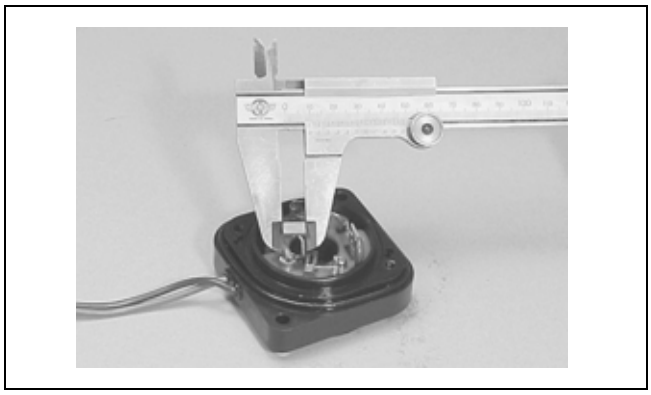

001927

O-ring

Inspect the O-ring between the PTT motor and the pump. If there are any cuts, nicks, or tears, replace the O-ring.

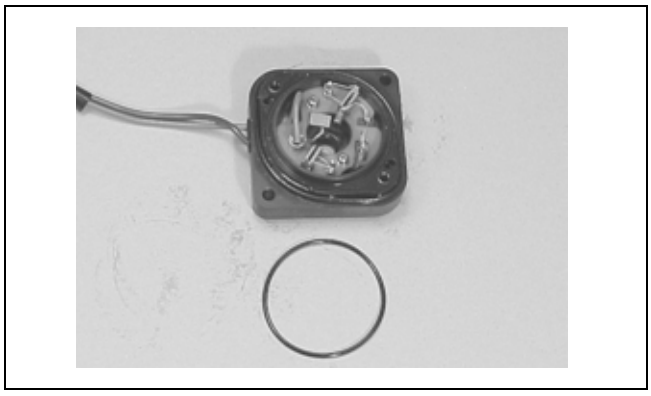

001928

Assembly

Install the O-ring on the brush holder. Make sure that the O-ring is positioned correctly

Carefully slide the armature onto the brush holder to avoid breaking any of the brushes.

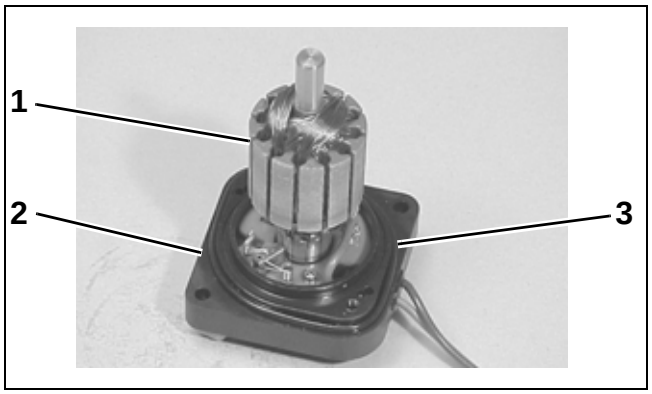

1. Armature 001929
2. Brush holder
3. O-ring

Install the motor case over the brush holder. Make sure that the alignment marks on the case and the holder are aligned.

Install and tighten two (2) screws that secure the motor case to the brush holder.

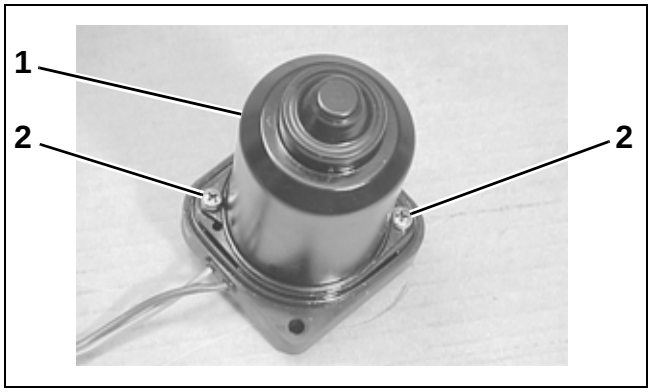

1. Motor case 001922
2. Screws (2)

Installation

Make sure that the drive joint is aligned and firmly inserted into the gear pump assembly.

Check the level of PTT oil in the pump. If the level is low, add the recommended PTT oil until the oil is level with the mating surface of the PTT motor.

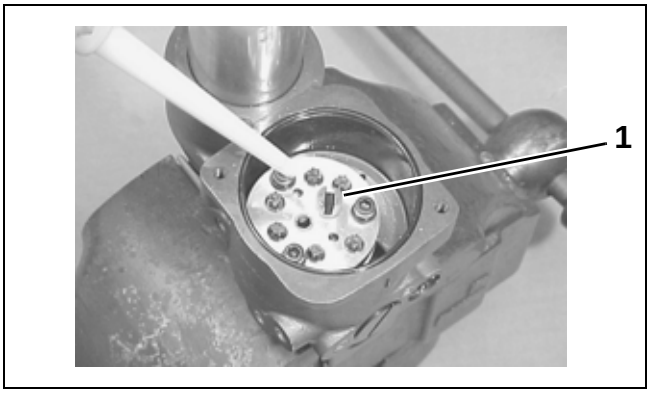

1. Drive joint 001931

Make sure the mating surfaces of the PTT motor and the reservoir are free of dirt or debris.

Install the O-ring on the bottom of the PTT motor.

Install the PTT motor on the pump. Make sure that the tip of armature shaft fits firmly into the drive joint.

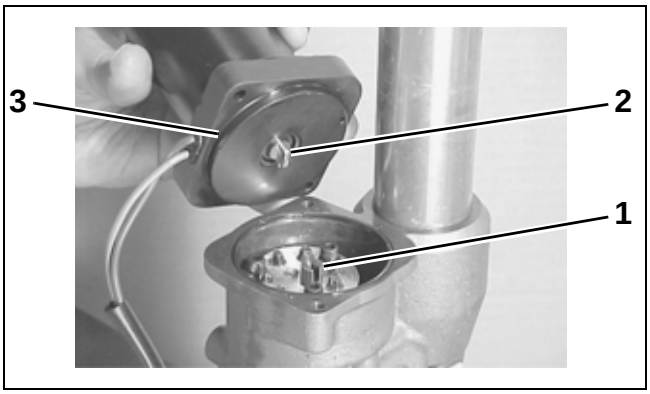

1. Drive joint 001932
2. Armature shaft
3. O-ring

Install the reservoir. Install and tighten two (2) screws to a torque of 40 in. lbs. (4.5 N·m).

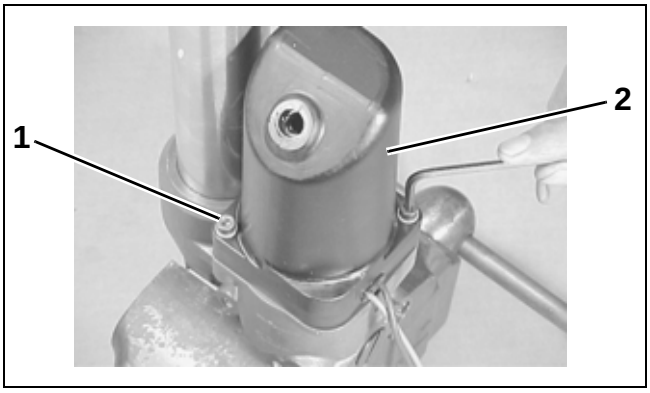

1. Screws (2)
2. Reservoir

001920

Pour the recommended PTT oil into the reservoir to the specified level. Install the reservoir plug.

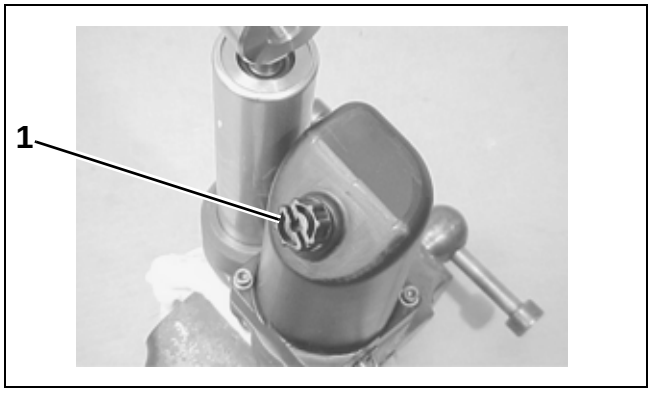

1. Reservoir plug

001918

Bleed the air from the reservoir. Refer to “Bleeding the Air” on page 228.

OPERATION

The power trim and tilt (PTT) system is operated by a “rocker” type switch (protected by a rubber thumb pad) on top of the remote control box handle.

When the switch is depressed, power is delivered to the electric motor via the relay. The relay with the blue wire connected to the pump is for trim/tilt “up”. The relay with the green wire is for trim/tilt “down”.

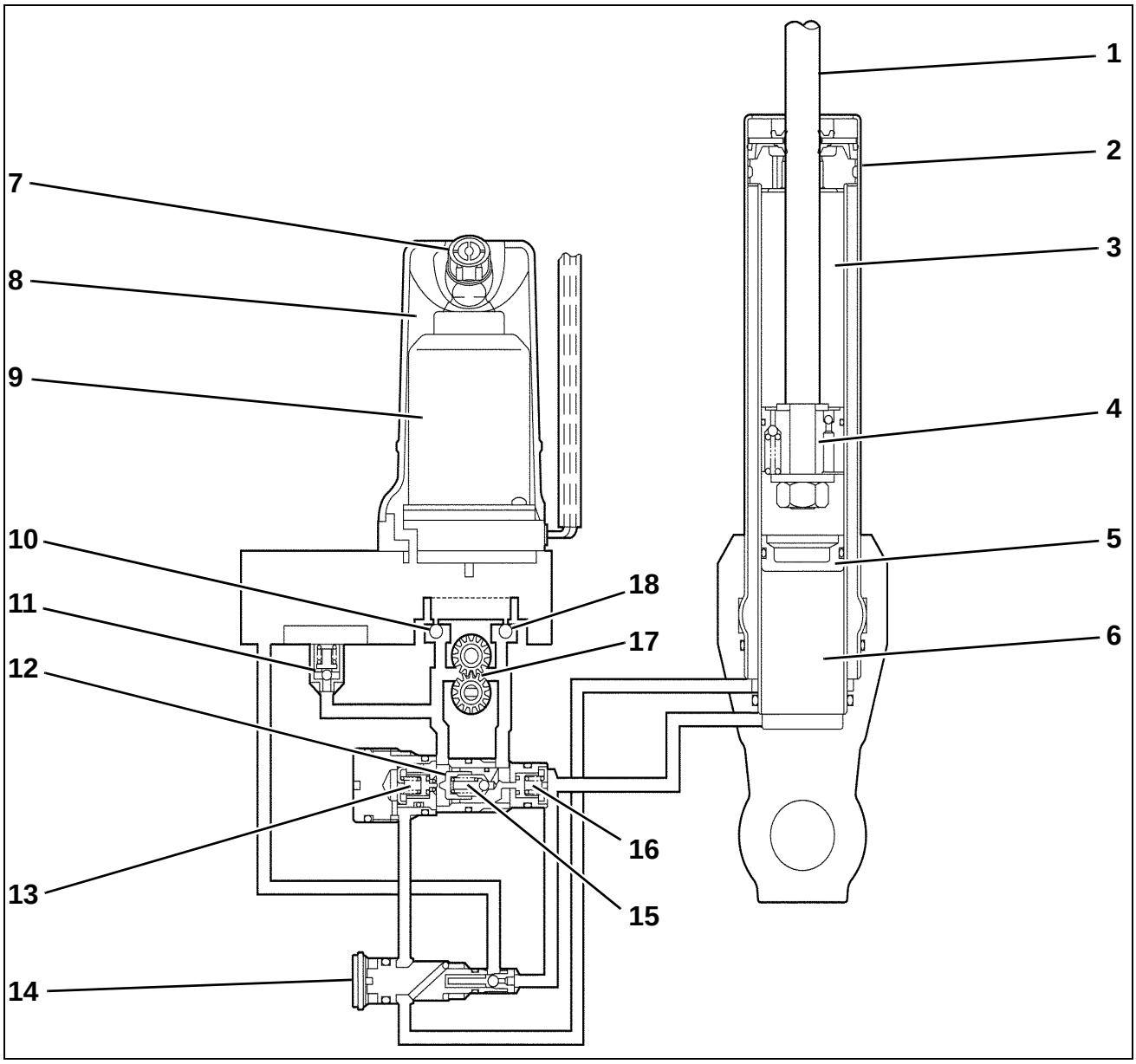

001941

1. *Tilt rod*
2. *PTT cylinder*
3. *Upper cylinder chamber*
4. *Piston*
5. *Free piston*
6. *Lower cylinder chamber*
7. *Oil filler cap*
8. *Oil reservoir*
9. *PTT motor*
10. *Check valve “A”*
11. *DOWN relief valve*
12. *Spool valve*
13. *DOWN pressure main check valve*
14. *Manual release valve*
15. *UP relief valve*
16. *UP pressure main check valve*
17. *Gear pump*
18. *Check valve “B”*

Trim Tilt “UP” Circuit

The electric motor is operating in a clockwise direction. Check valve “A” will open, allowing oil to flow from the reservoir to the pump. Oil flow from the pump enters the spool valve and moves it to the left, opening the “down” pressure main check valve and returning oil from the upper cylinder chamber (and oil from the reservoir) to the pump. Pressure built up by the pump will then open the “up” pressure main check valve and oil will enter the lower cylinder chamber.

When the trim motor stops, both the “down” pressure main check valve and the “up” pressure main check valve will close to retain tilt/trim position.

When full trim/tilt “up” position is attained, sustained operation of the “up” relay will have no effect, as pump oil flow will be returned to the reservoir through the “up” relief valve.

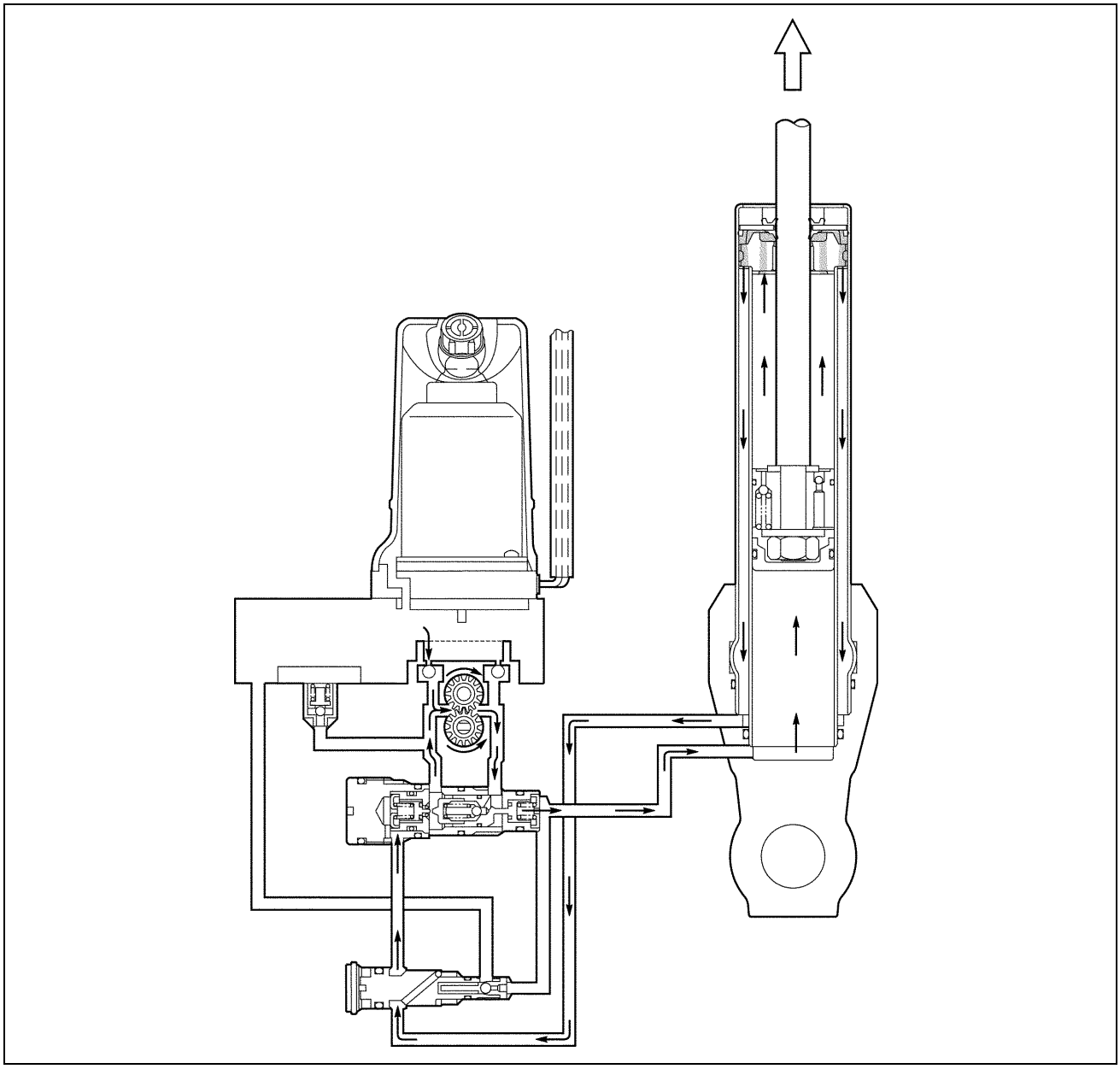

001942

Trim/Tilt “DOWN” Circuit

The electric motor is operating in a counterclockwise direction. Check valve “A” will open, allowing oil to flow from the reservoir to the pump. Oil flow from the pump enters the spool valve and moves it to the right, opening the “up” pressure main check valve. Oil from the lower cylinder chamber will go through the “up” pressure main check valve to the pump.

Pressure built up by the pump will open the “down” pressure main check valve and oil will enter the upper cylinder chamber. The piston will retract (move inward), which will tilt the outboard down. Oil in the lower cylinder chamber is returned to the pump through the “up” pressure main check valve.

When full “down” position is reached, continued operation of the “down” relay will have no effect, as pump oil flow will be returned to the reservoir through the “down” relief valve.

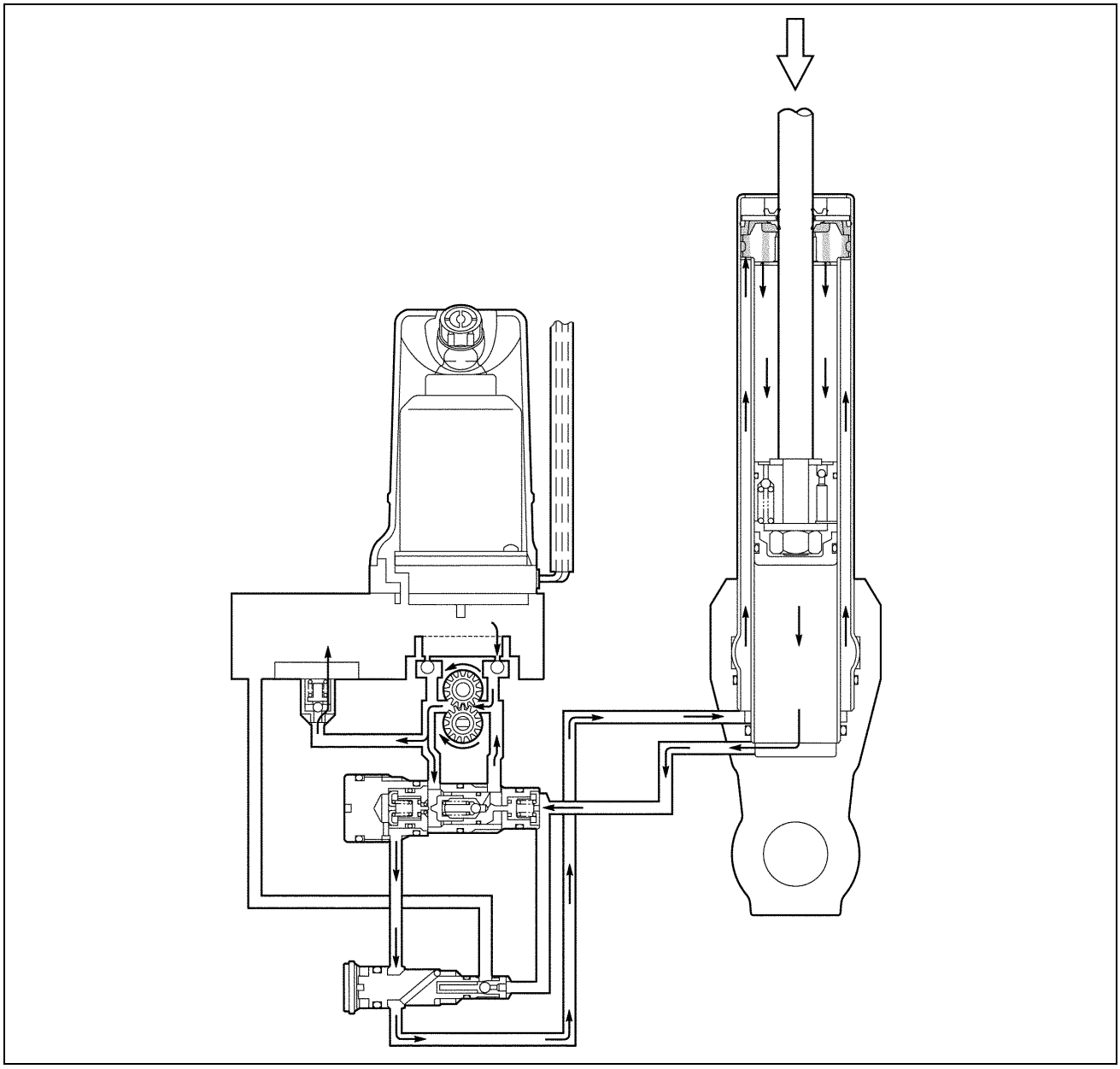

001943

Shock Absorber Circuit

Shock valve

Should the lower unit strike an underwater object while in motion, the piston will rise abruptly, creating a sudden high impact pressure in the upper cylinder chamber. The shock valve will then open, allowing oil to flow into the area between the tilt ram piston and the free piston, thereby dampening (absorbing) the impact.

Return valve

When the point of impact has passed, propeller thrust and motor weight will force the tilt ram piston back downwards. The oil from between the ram piston and the free piston is then expelled through the return valve before flowing into the upper cylinder chamber.

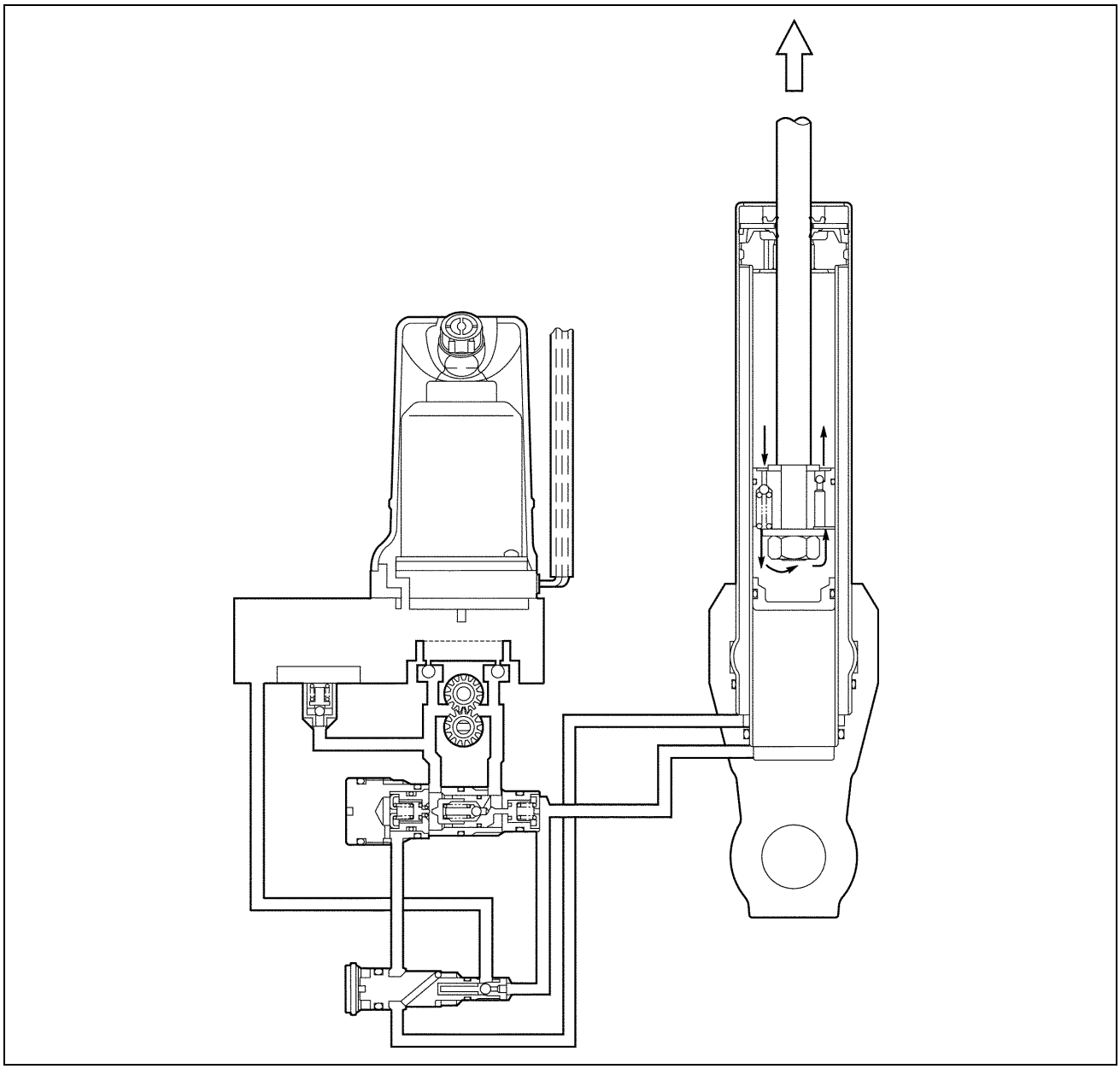

001944

Manual Release Circuit (Manual Valve)

Turn the manual valve a maximum of three full counterclockwise turns.

When the manual valve is loosened, oil will flow unimpeded (without resistance) through the internal pump tubes, thereby facilitating manual tilting or lowering of the outboard. To hold the engine in a selected position, the manual valve must be closed again.

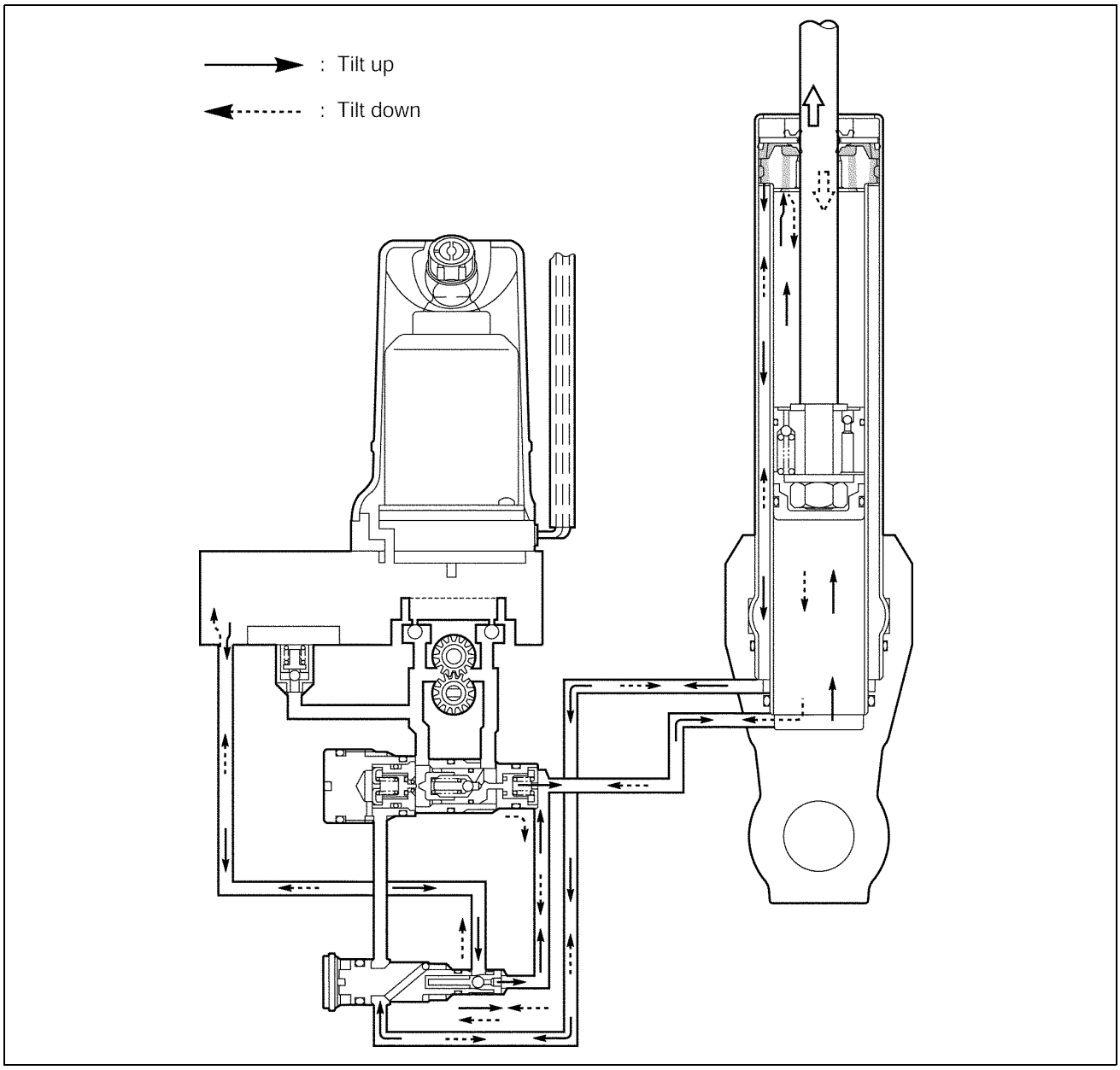

001945

Thermal Valve

The PTT system incorporates a thermal valve for protection of the internal components if excessive downward force is exerted on the lower unit with the motor in a tilted position or, in the case of an impact in reverse gear, the stern clamp/swivel brackets and the transom.

Should the propeller strike an underwater object while in reverse gear, a build up of pressure will be induced in the lower cylinder chamber and the brackets and/or the transom may sustain damage. To prevent this, the thermal valve will open to relieve the oil pressure, thereby softening the impact.

Internal PTT circuits are protected, as the thermal valve will open to reduce oil pressure caused by either hot climate or abnormally heavy usage.

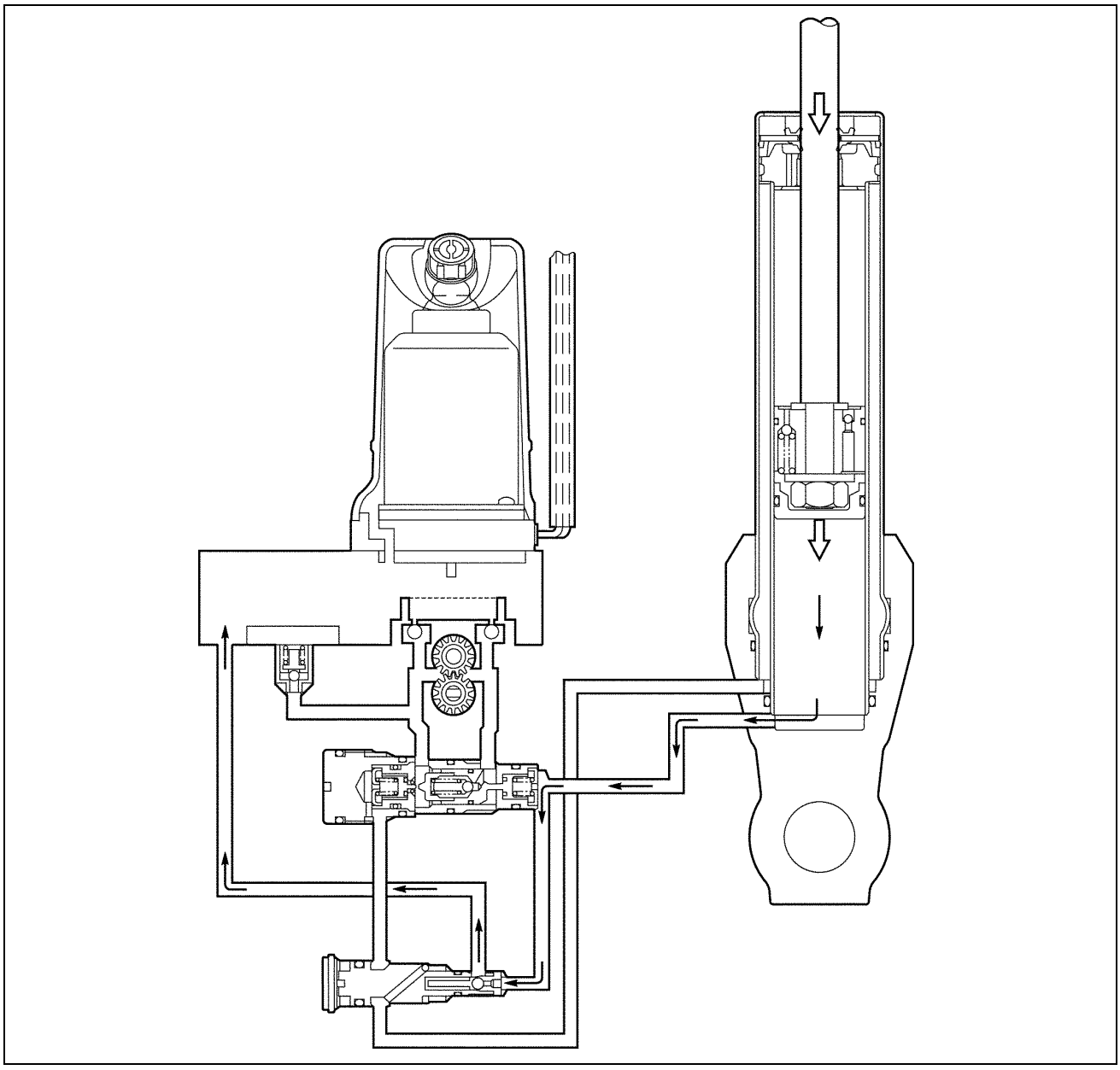

001946

WIRE AND HOSE ROUTING

TABLE OF CONTENTS

WIRE ROUTING 244
30 TEL 245
30 (PL) REMOTE 246
30 TEL 247
30 (PL) REMOTE 247
30 TEL 248
30 (PL) REMOTE 248
30 TEL 249
30 (PL) REMOTE 249
FUEL / WATER HOSE ROUTING 250
30 TEL 250
30 (PL) REMOTE 251
NOTES 254

WIRE ROUTING

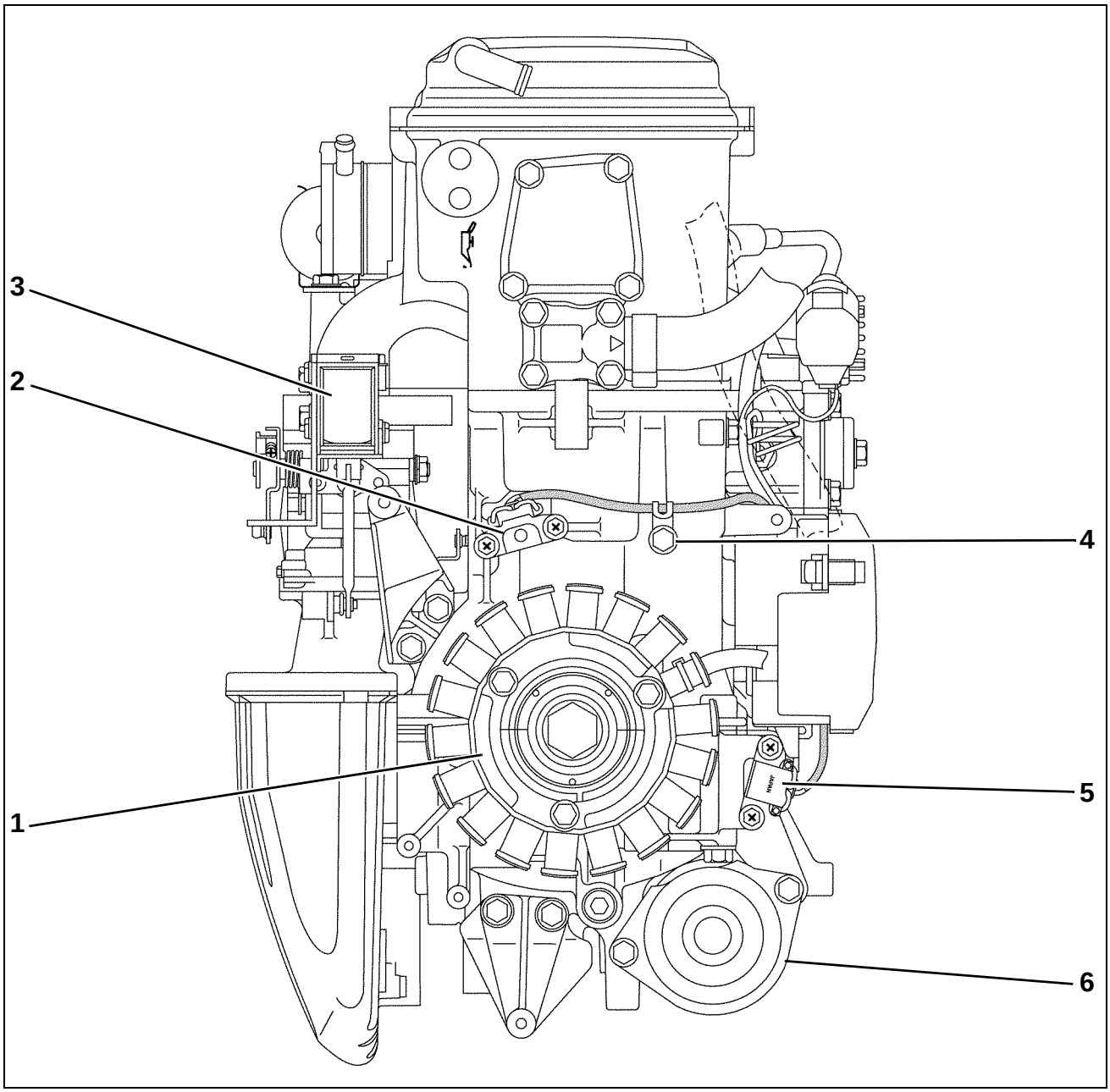

001951

1. *Battery charge and power source coil*
2. *Crankshaft position sensor No. 1*
3. *Choke solenoid*
4. *Clamp*
5. *Crankshaft position sensor No. 2*
6. *Starter motor*

30 TEL

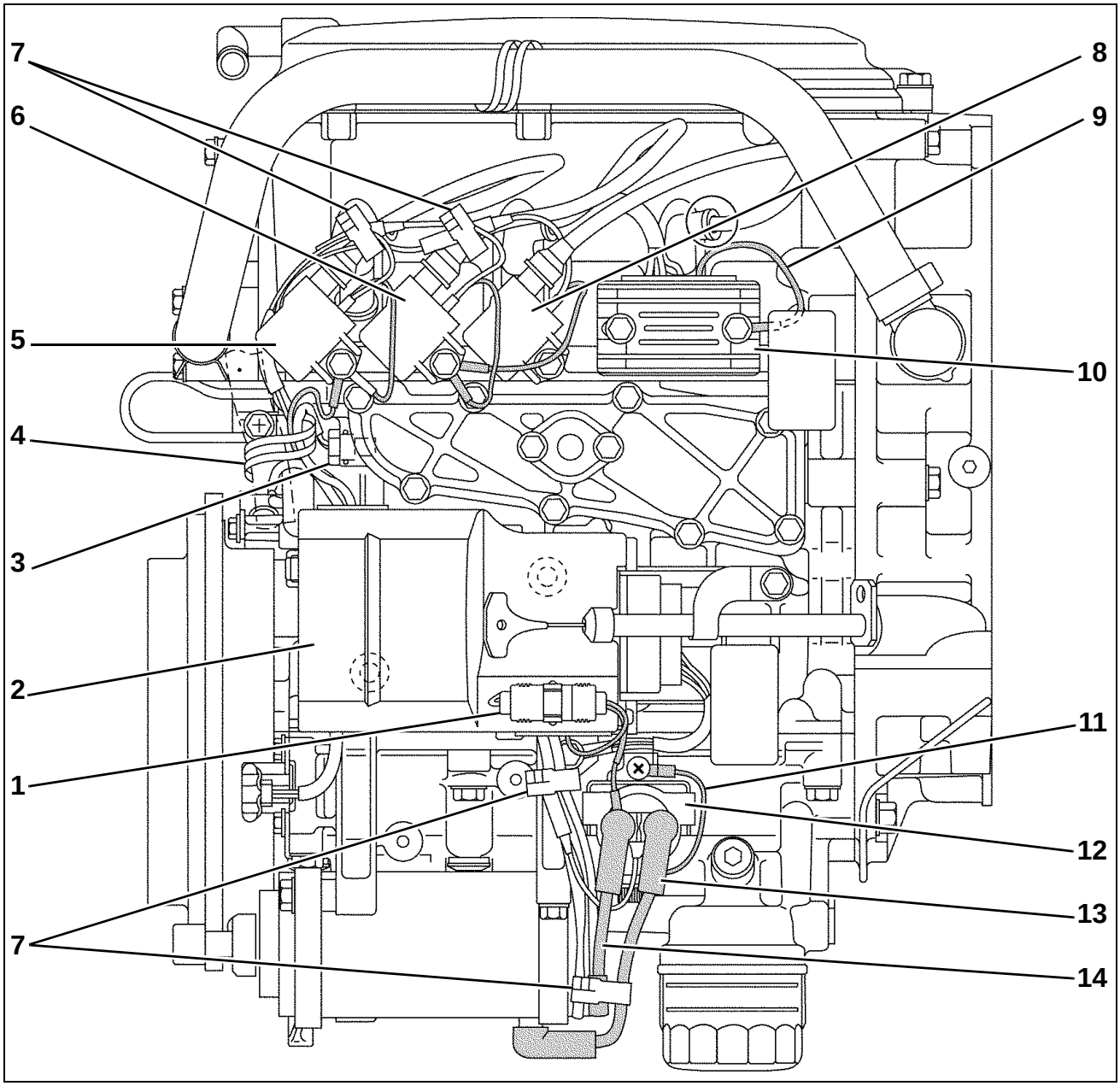

001953

1. *Fuse*
2. *Electric parts holder*
3. *Cylinder temperature sensor*
4. *Clamp*
5. *Ignition coil No. 1*
6. *Ignition coil No. 2*
7. *Clamp*
8. *Ignition coil No. 3*
9. *Rectifier ground lead wire*
10. *Rectifier and regulator*
11. *Starter motor relay ground lead wire*
12. *Starter motor relay*
13. *Starter motor sub cable*
14. *Battery cable (+)*

30 (PL) Remote

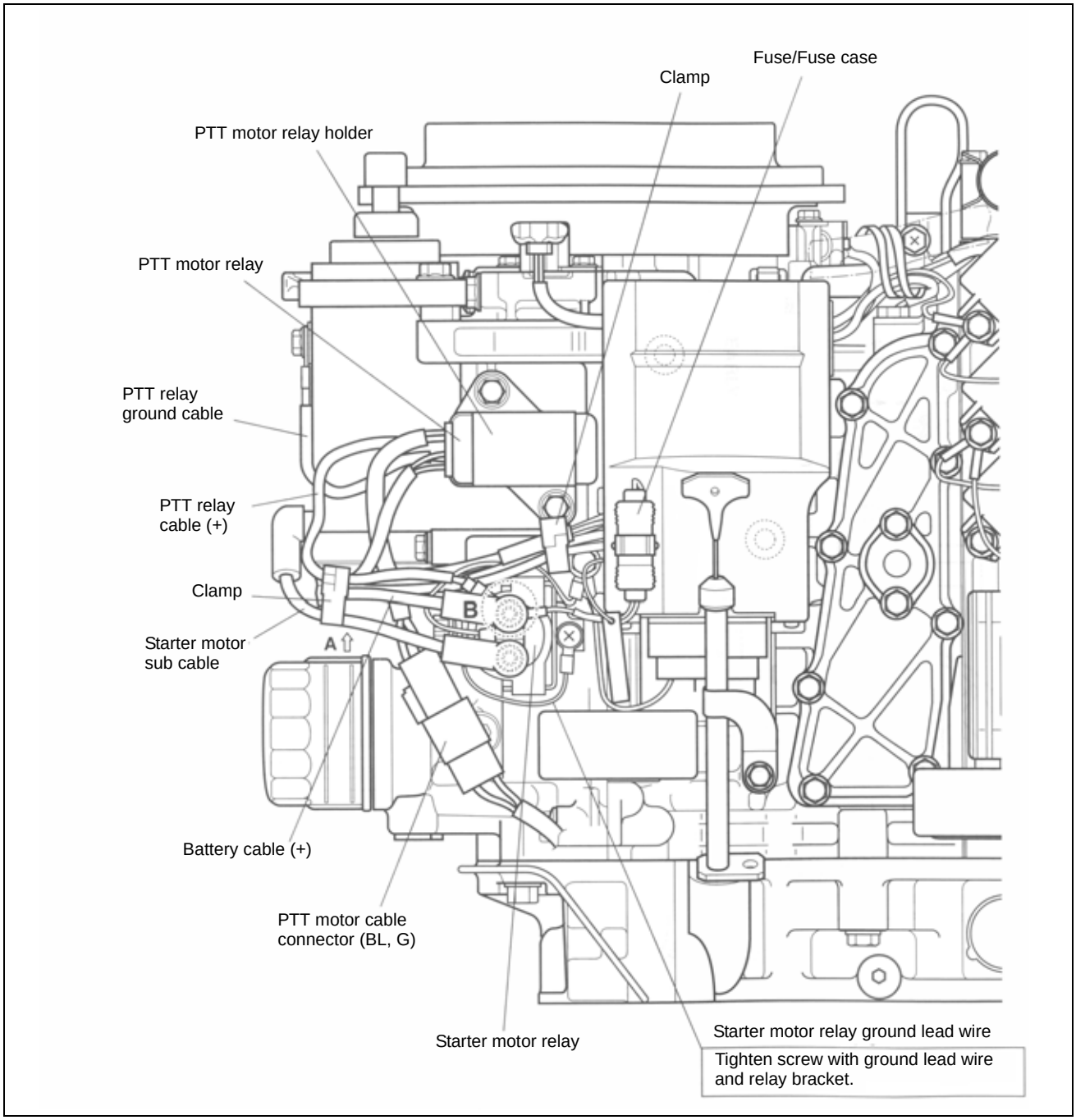

004354

30 TEL

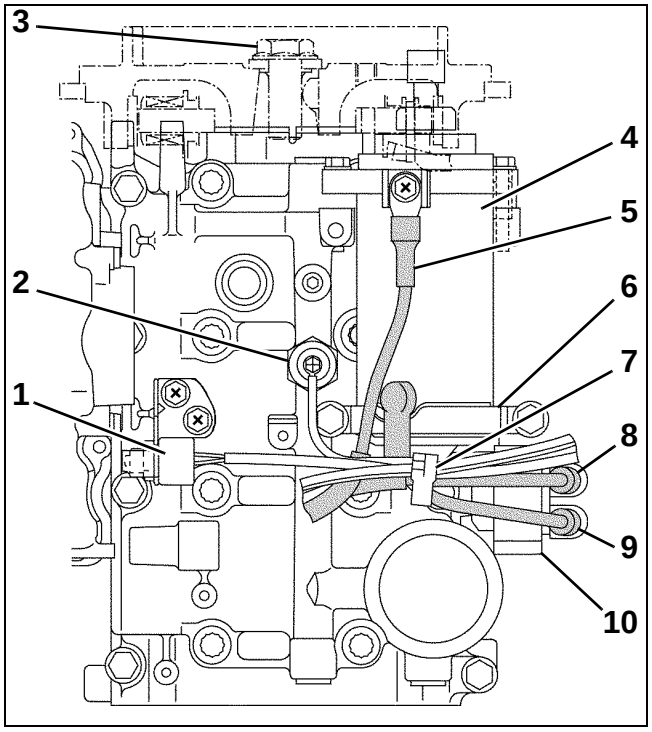

001956

1. *Neutral switch*
2. *Oil pressure switch*
3. *Flywheel bolt*
4. *Starter motor*
5. *Battery cable (–)*
6. *Starter motor band*
7. *Clamp*
8. *Battery cable (+)*
9. *Starter motor sub cable*
10. *Starter motor relay*

30 (PL) Remote

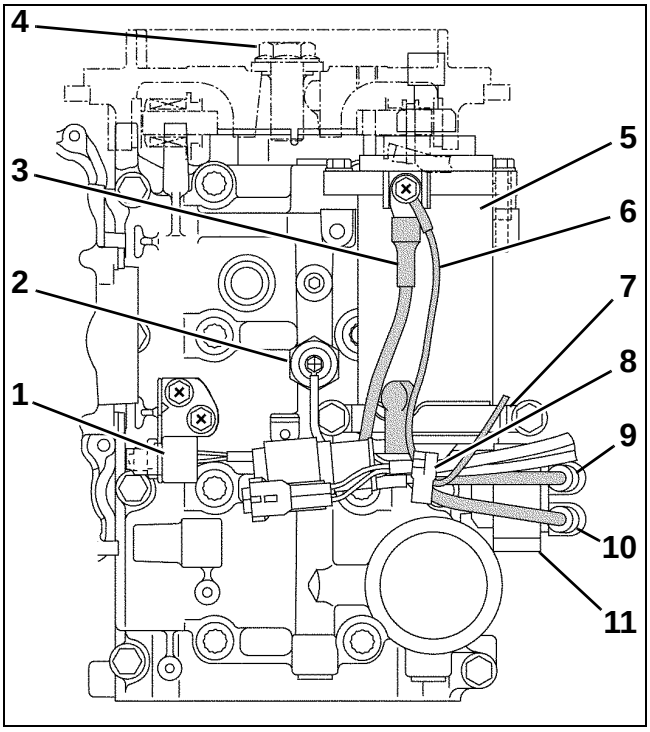

001957

1. *Neutral switch*
2. *Oil pressure switch*
3. *Battery cable (–)*
4. *Flywheel bolt*
5. *Starter motor*
6. *Battery cable (–)*
7. *Starter motor band*
8. *Clamp*
9. *Battery cable (+)*
10. *Starter motor sub cable*
11. *Starter motor relay*

30 TEL

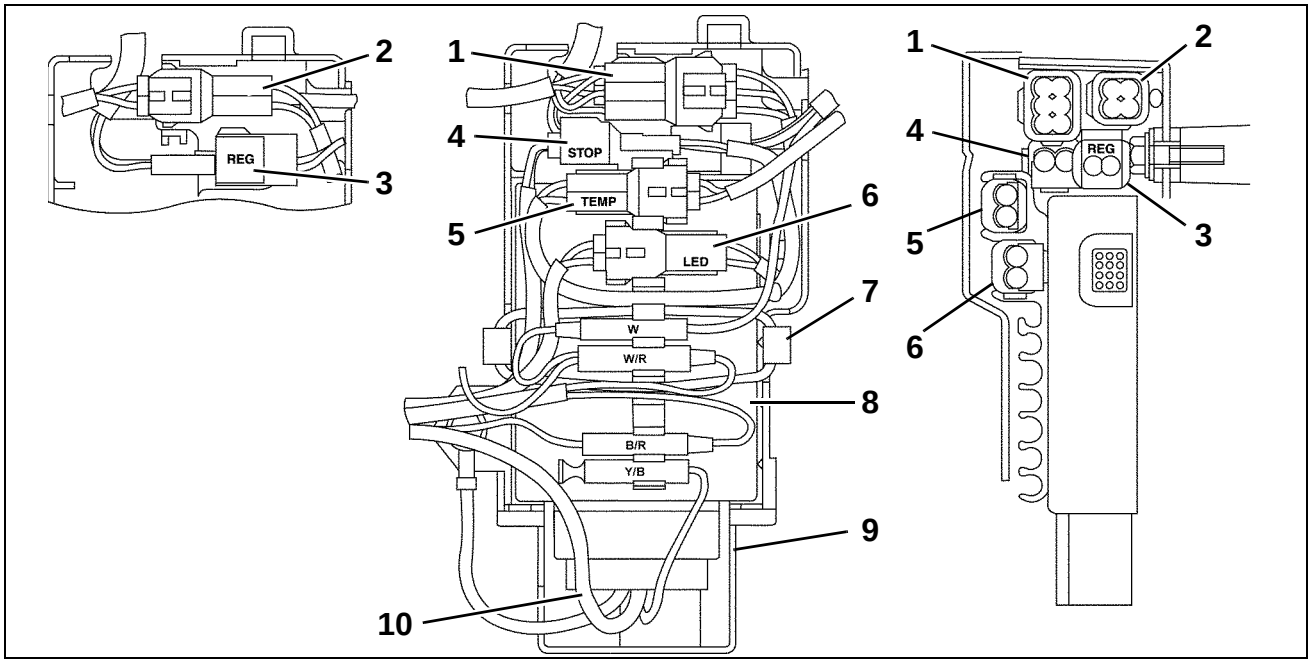

1. *Power source coil connector*
2. *Crankshaft position sensor connector*
3. *Battery charge coil connector*
4. *Stop switch connector*
5. *Cylinder temperature sensor connector*
6. *Caution lamp connector*
7. *Band*
8. *Power pack*
9. *Electric parts holder*
10. *Engine main wiring harness*

001959

30 (PL) Remote

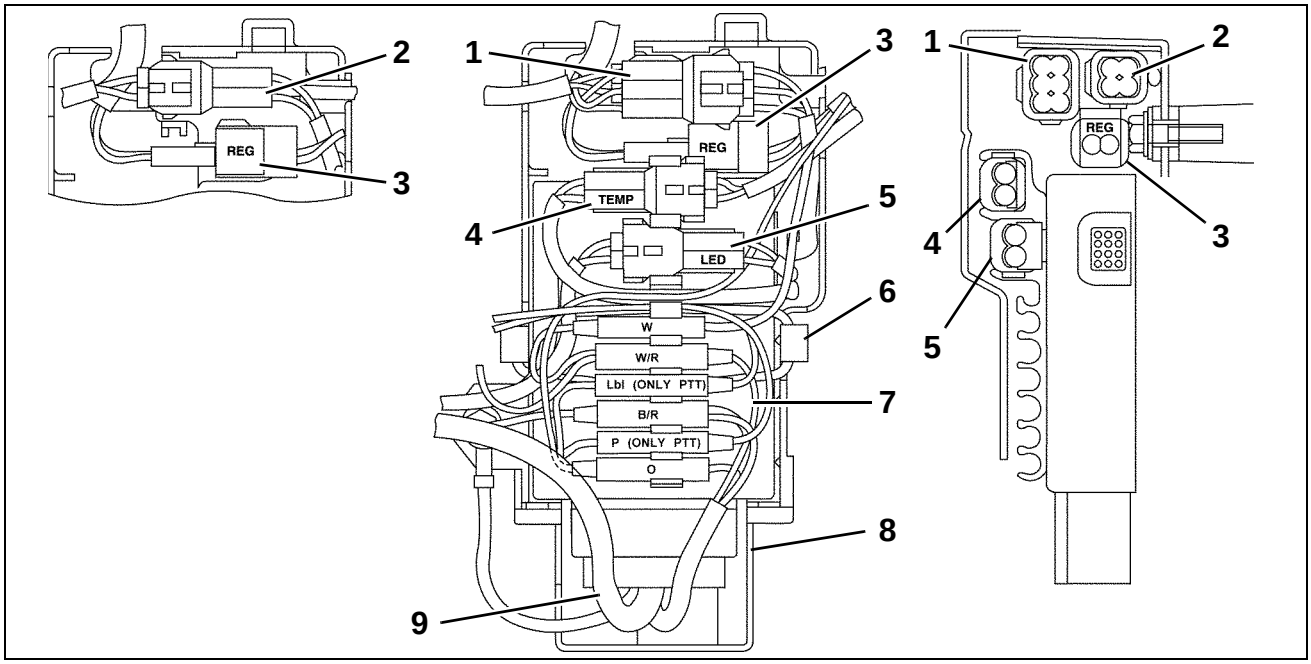

1. *Power source coil connector*
2. *Crankshaft position sensor connector*
3. *Battery charge coil connector*
4. *Cylinder temperature sensor connector*
5. *Caution lamp connector*
6. *Band*
7. *Power pack*
8. *Electric parts holder*
9. *Engine main wiring harness*

001960

30 TEL

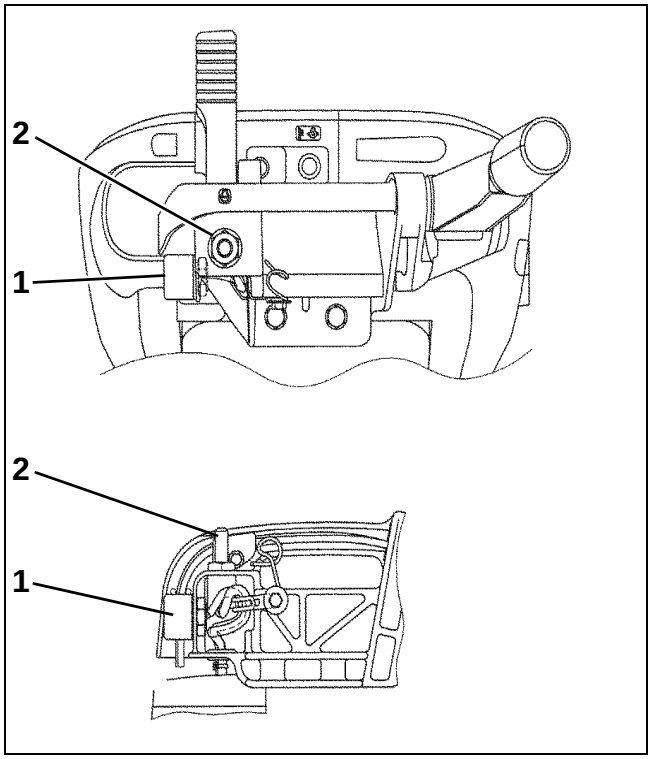

1. *Starter switch*
2. *Emergency stop switch*

001961

30 (PL) Remote

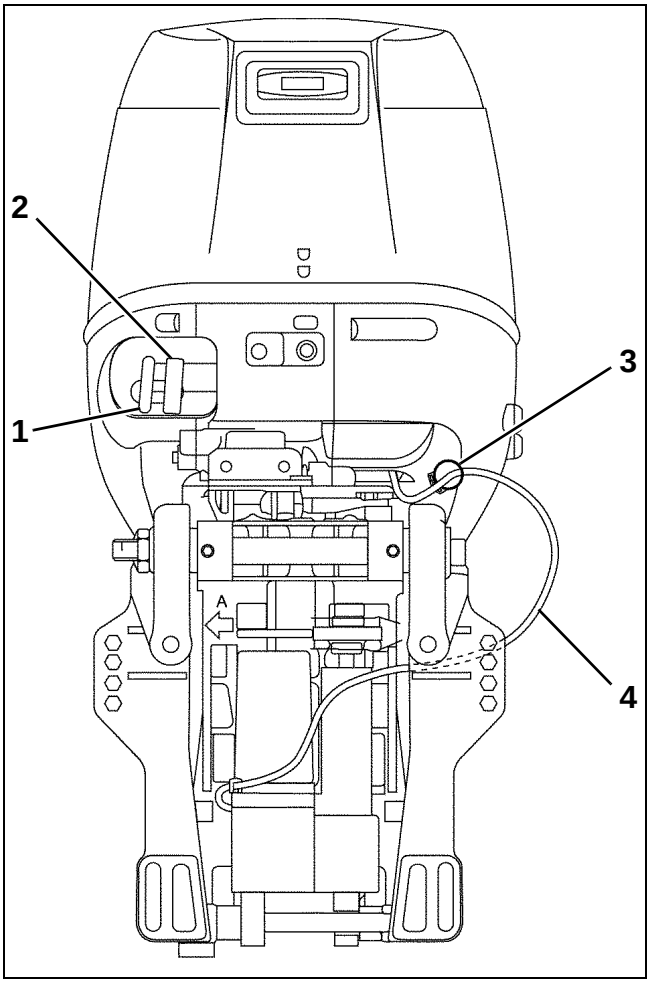

1. *Remote control harness*
2. *Battery cable*
3. *Clip*
4. *PTT motor cable wire*

001962

FUEL / WATER HOSE ROUTING

30 TEL

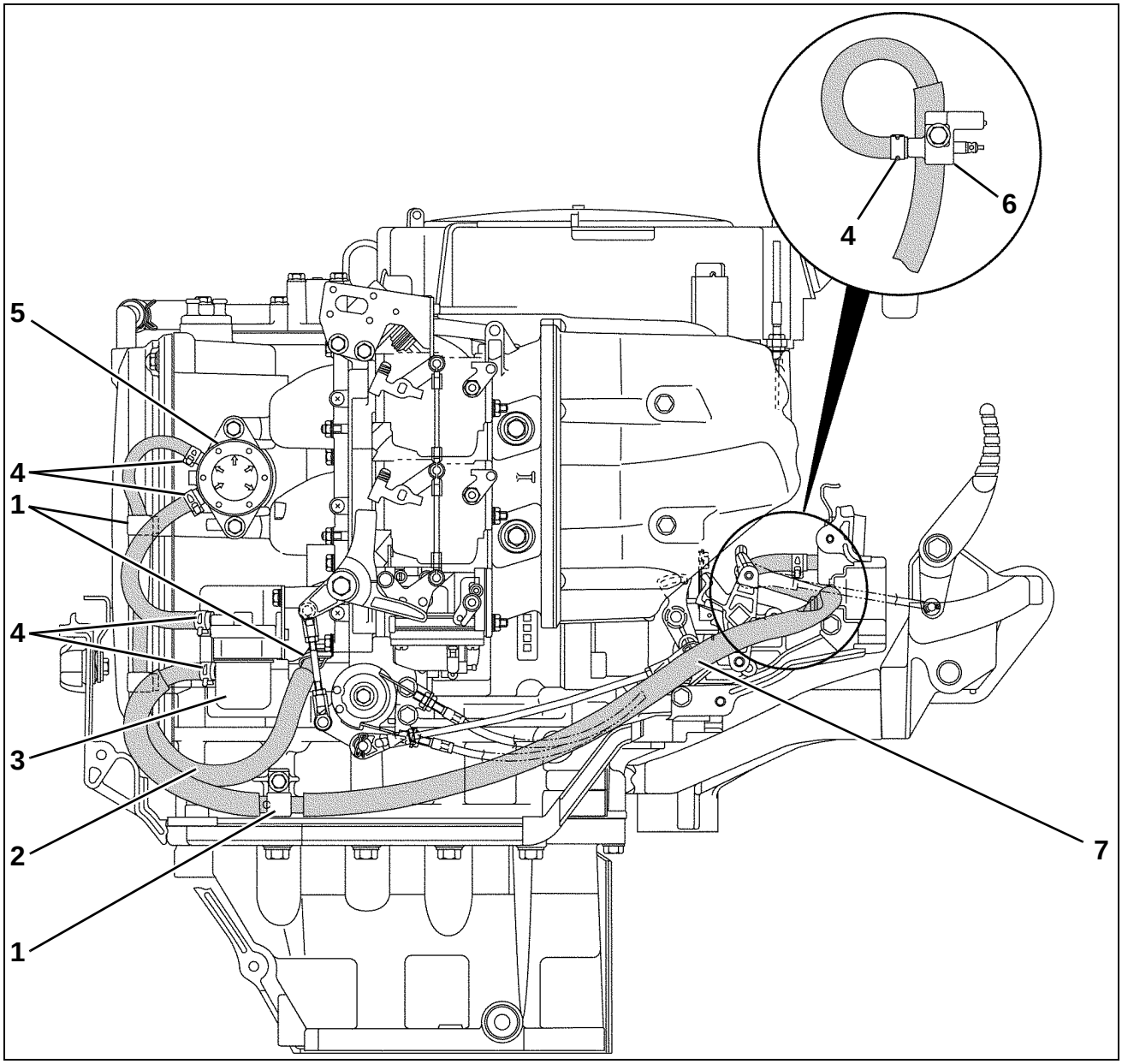

001964

1. *Hose clamp*
2. *Fuel hose (fuel pump to carburetor)*
3. *Fuel filter*
4. *Clip*
5. *Fuel pump*
6. *Fuel connector plug*
7. *Fuel hose (connector to fuel filter)*

30 (PL) Remote

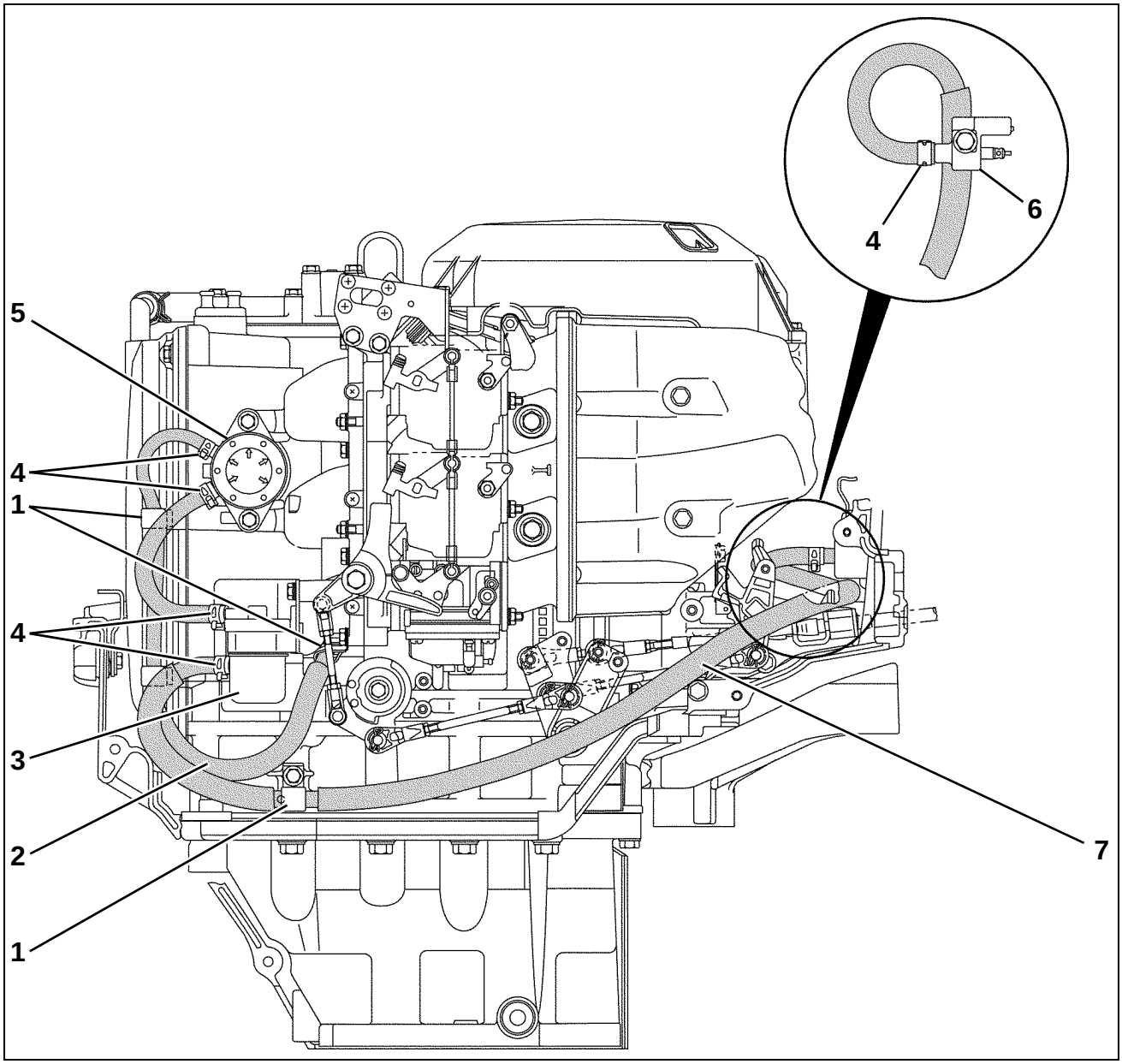

001963

1. *Hose clamp*
2. *Fuel hose (fuel pump to carburetor)*
3. *Fuel filter*
4. *Clip*
5. *Fuel pump*
6. *Fuel connector plug*
7. *Fuel hose (connector to fuel filter)*

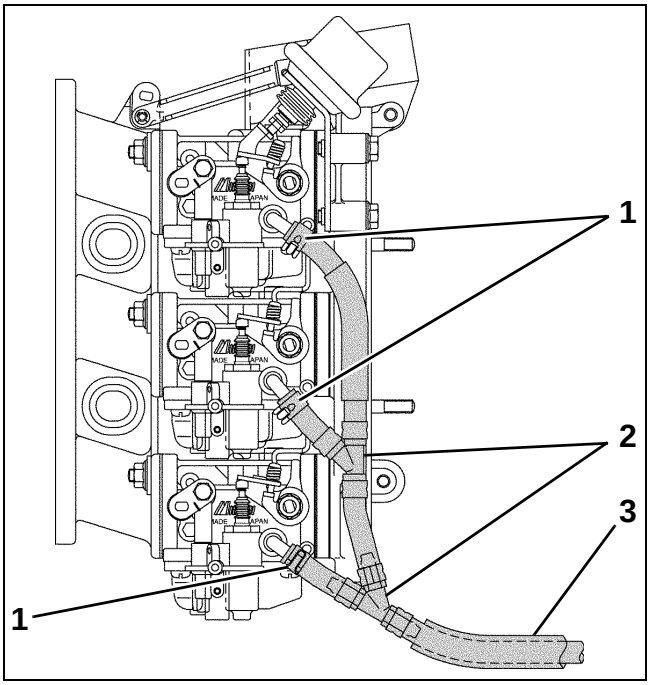

1. Clip 001965
2. 3-way joint (with clips)
3. Fuel hose (fuel pump to carburetor)

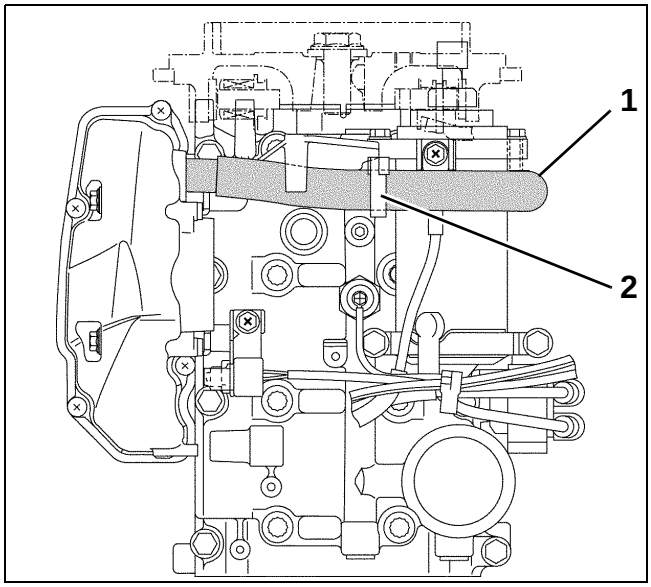

1. Breather hose / protector 001966
2. Clamp

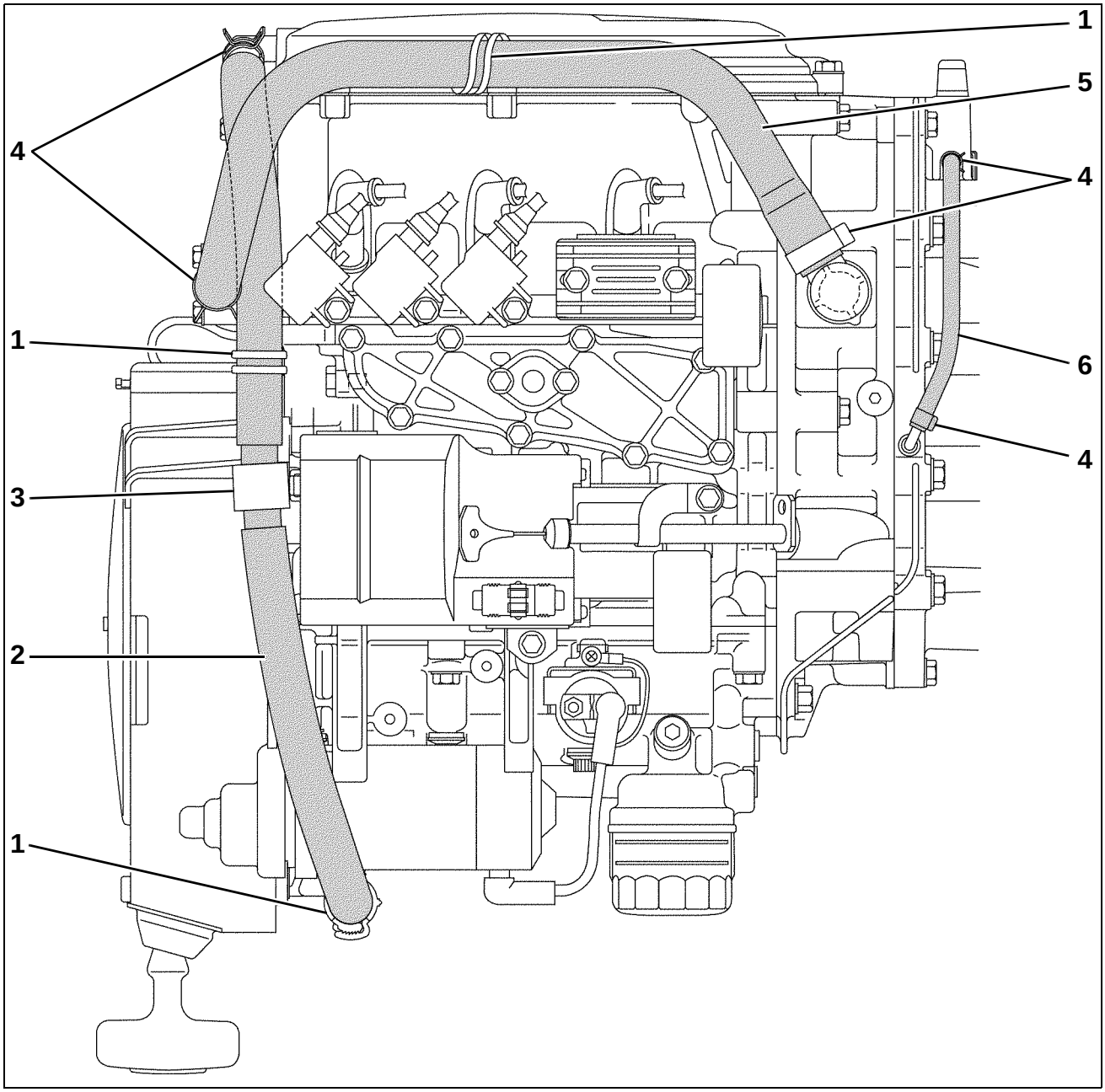
1
5
4
4
1
6
4
3
2
1

NOTES

Technician's Notes

Related Documents

Bulletins	
Instruction Sheets	
Other	

SAFETY

TABLE OF CONTENTS

MARINE PRODUCTS AND THE SAFETY OF PEOPLE WHO USE THEM S–3
OUTBOARD SHIFT SYSTEMS AND SAFETY S–4
OUTBOARD SPEED CONTROL SYSTEM AND SAFETY S–5
OUTBOARD STEERING CONTROL SYSTEM AND SAFETY S–6
OUTBOARD FUEL, ELECTRICAL SYSTEM, AND SAFETY S–8
OUTBOARD MOUNTING SYSTEM AND SAFETY S–11
OUTBOARD HYDRAULIC TILT/TRIM SHOCK ABSORPTION SYSTEM AND SAFETY S–13
OUTBOARD EMERGENCY STOP SYSTEM AND SAFETY S–14
SUMMING UP S–16
MARINE PRODUCTS AND THE SAFETY OF PEOPLE WHO FIX THEM S–17
HANDLING OUTBOARDS S–17
HANDLING LEAD/ACID BATTERIES S–21
GASOLINE – HANDLE WITH CARE S–22
HAZARDOUS PRODUCTS S–23
SAFETY AWARENESS TEST S–24

MARINE PRODUCTS AND THE SAFETY OF PEOPLE WHO USE THEM

WARNING

This Safety section contains information relevant to the safety of boaters and people that service boats. Please read this section carefully and share it with all shop technicians. Always follow common shop safety practices. If you have not had training related to common shop safety practices, you should do so not only to protect yourself, but also to protect the people around you.

It is impossible for this manual to cover every potentially hazardous situation you may encounter. However, your understanding and adherence to the recommendations contained in this manual and use of good judgment when servicing outboards will help promote safety. Always be alert and careful: a good foundation for safety.

Enjoyable boating is the goal of people who design and build marine products. To reach this goal, manufacturers are careful to make sure:

- Product user is informed; and
- Products are safe and reliable.

It is up to you, the people who...

- Rig boats;
- Fix machinery; and
- Maintain equipment

...to keep the products safe **and** reliable.

This section talks about safe boating and how you can help make it safe. Some of these safety issues you will know, others you may not.

First!

A word about parts... Plain parts; special parts; all parts!

DO NOT SUBSTITUTE PARTS

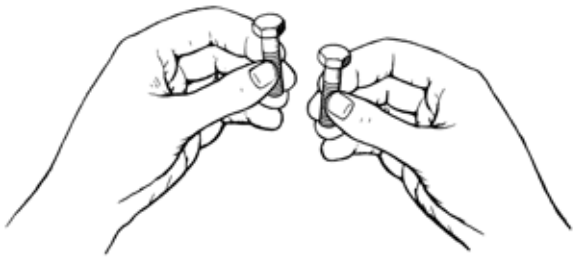

“They look the same, but are they the same?”

- Same size?
- Same strength?
- Same material?
- Same type?

Don’t substitute unless **you know** they are the **same** in **all** characteristics.

Second!

- Special locking bolts and nuts are often used to hold steering, shift, and throttle remote control cables to the outboard.
- When you take any outboard off a boat, keep track of special nuts and bolts. Do not mix with other parts. Store them on the outboard, then they are there when you need them.
- When the outboard is returned to the boat, use only the special nuts and bolts to hold remote steering, shift, and throttle cables to the outboard.

Outboard Shift Systems and Safety

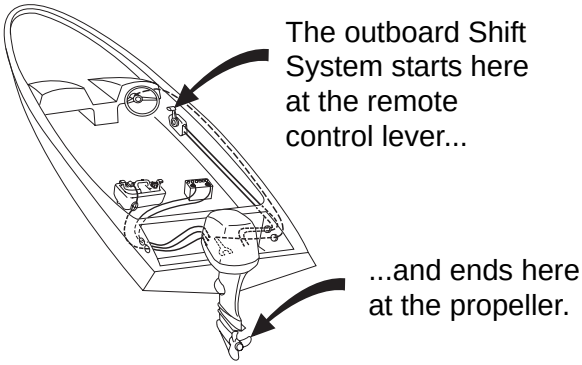

What is most important?

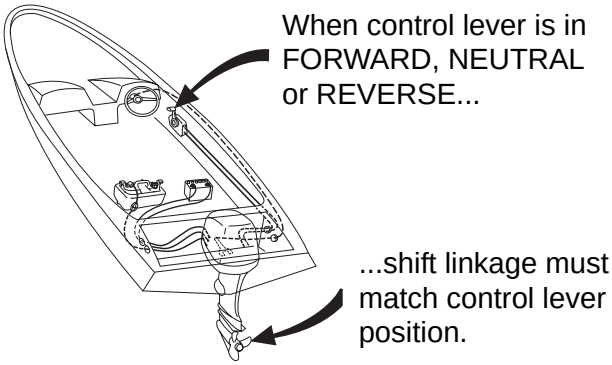

What could happen?

IF...

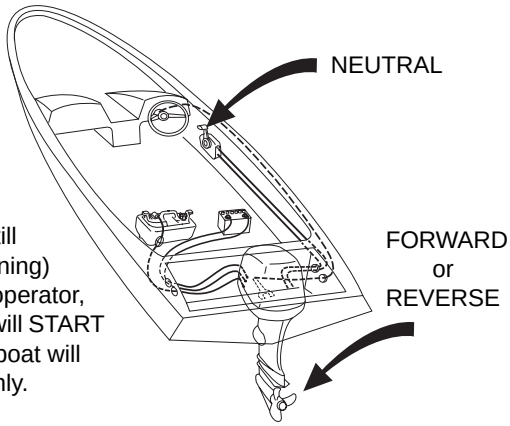

...propeller still powered (turning) unknown to operator, or outboard will START in gear, and boat will move suddenly.

IF...

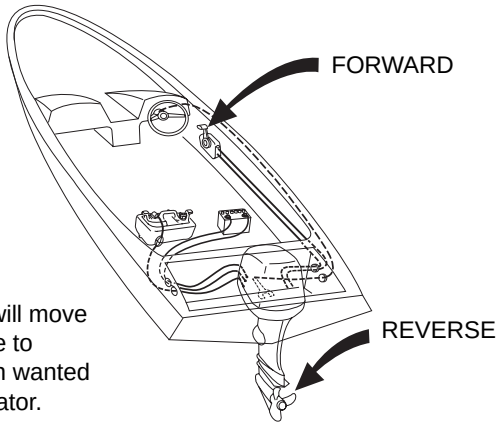

...boat will move opposite to direction wanted by operator.

How can loss of shift control be minimized?

When rigging or after servicing	**Read**, **understand**, and **follow** manufacturer's **instructions** • Follow warnings marked "⚠" closely. • Assemble parts carefully. • Make adjustments carefully. • Test your work. Do not guess. Make sure propeller does just what the operator wants and nothing else. • Do not shift gears on a stopped outboard. Adjustments can be lost and parts weakened.

Outboard Speed Control System and Safety

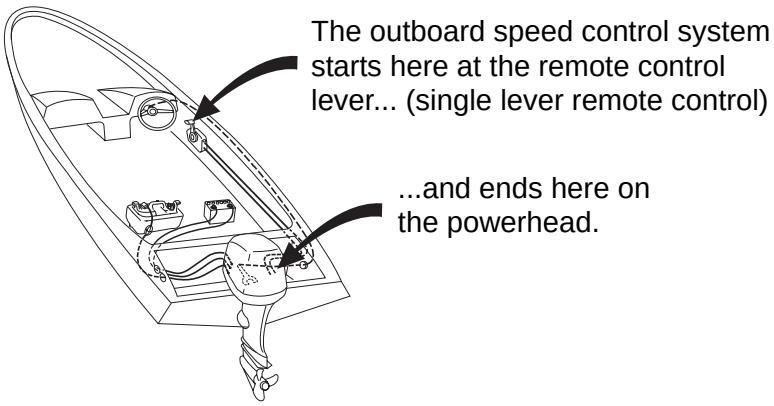

What is most important?

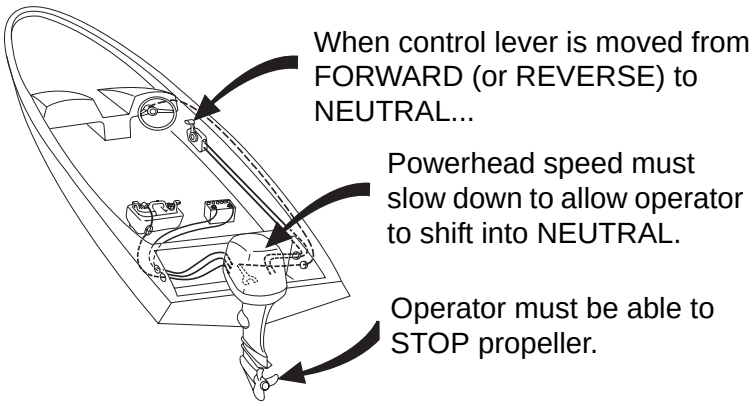

What could happen?

If Operator cannot slow down the outboard or shift into NEUTRAL gear (stop propeller), Operator could panic and lose control of boat.

How can loss of speed control be minimized?

When rigging or after servicing

Read, **understand**, and **follow** manufacturer's **instructions**

- Follow warnings marked "⚠" closely.
- Assemble parts carefully.
- Make adjustments carefully.
- Test your work. Do not guess. Make sure speed control system does just what the operator wants and nothing else.
- Make sure full throttle can be obtained so Operator will not overload parts.

Outboard Steering Control System and Safety

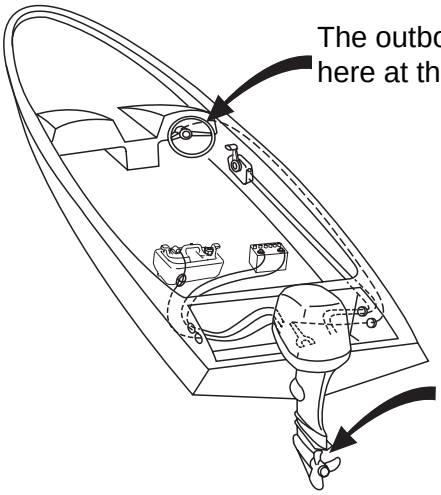

What is most important?

The steering system:
- Must not come apart;
- Must not jam; and
- Must not be sloppy or loose.

What could happen?

- If steering system comes apart, boat might turn suddenly and circle. Persons thrown into the water could be hit.

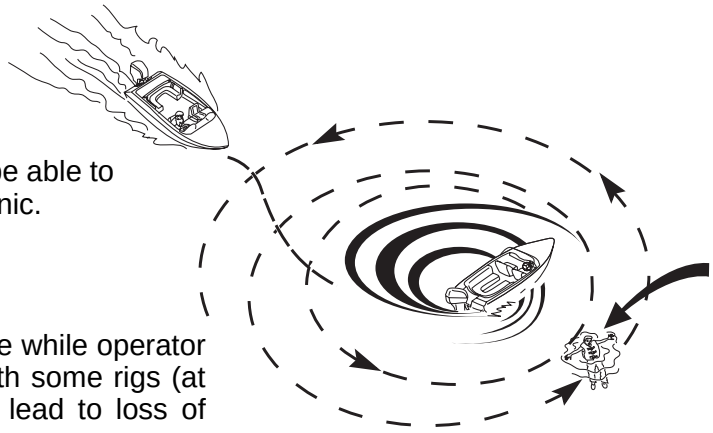

- If steering jams, operator may not be able to avoid obstacles. Operator could panic.

- If steering is loose, boat may weave while operator tries to steer a straight course. With some rigs (at high speed), loose steering could lead to loss of boat control.

How can loss of steering control be minimized?

When rigging or after servicing

- Use a steering system recommended by the outboard manufacturer which meets Marine Industry Safety Standards (ABYC).
- **Read**, **understand**, and **follow** manufacturer's **instructions**
- Follow warnings marked "⚠" closely.
- Assemble parts carefully.
- Make adjustments carefully.
- Keep parts moving freely. Lubricate parts as shown in manual.
- Use the bolts, nuts and washers supplied with steering attachment kits—they are a special locking type that will not loosen, rust, or weaken.

Transom Mounted Steering Systems – Check to Uncover Possible Trouble!

Tilt outboard into boat, then turn it.

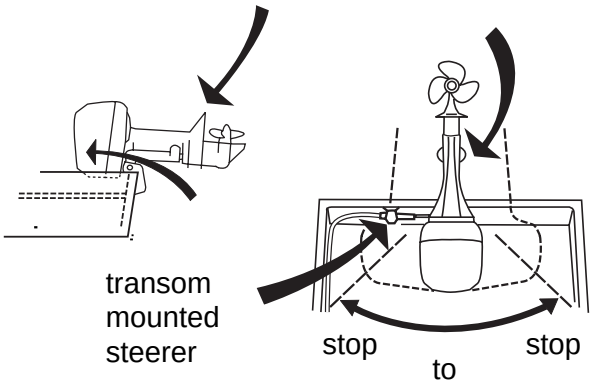

During this procedure, steering parts:

- Must not bind; and
- Must not touch other boat, outboard, or accessory parts in transom area.

Why? A hard blow to the outboard's gearcase can result in damage to steering parts.

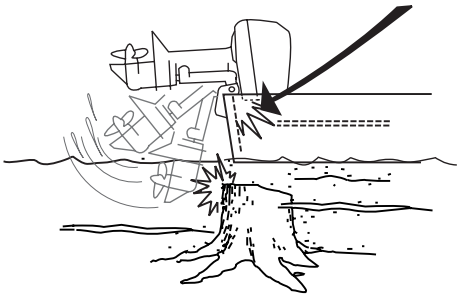

Be aware that raising or lowering outboard on transom can change a set-up which was OK earlier. If moved up or down even one-half inch, run test again to make sure steering parts are free and clear.

Check for damaged parts. Blows to the outboard like this

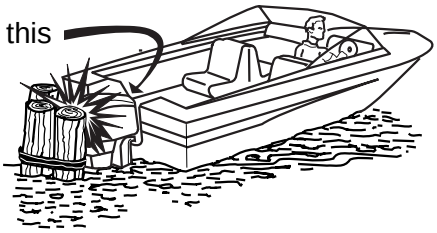

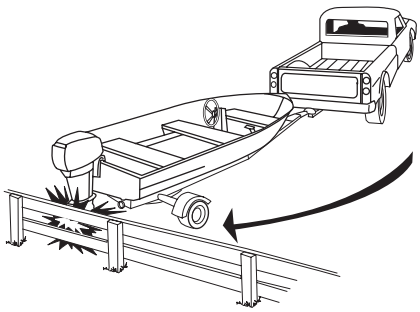

or this can put heavy loads on steering parts. Look for:

- Cracked parts, including steering parts, swivel brackets, and transom brackets;
- Bent parts; and
- Loose nuts and bolts.

Replace damaged parts. If weakened, parts could fail later on the water when least expected.

Outboard Fuel, Electrical System, and Safety

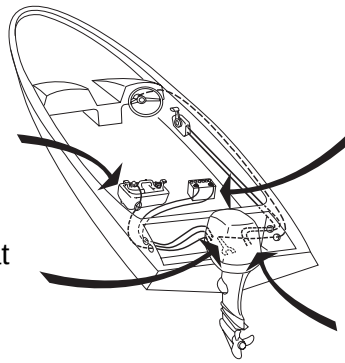

What is most important?

- Fuel leakage must be eliminated.
- Stray electric sparks must be avoided.

What could happen?

- **When not boating**, fuel leaking in car trunk or van, or place where portable tank is stored (basement or cottage), could be ignited by any open flame or spark (furnace pilot light, etc.).
- **When boating**, fuel leaking under the engine cover could be ignited by a damaged or deteriorated electrical part or loose wire connection making stray sparks.

How Can Fire and Explosion Be Minimized?

- **Read**, **understand**, and **follow** manufacturer's **instructions**
- Follow warnings marked "⚠" closely.
- **Do not** substitute fuel or electrical systems parts with other parts which may look the same. Some electrical parts, like starter motors, are of special design to prevent stray sparks outside their cases.
- Replace wires, sleeves, and boots which are cracked or torn or look in poor condition.

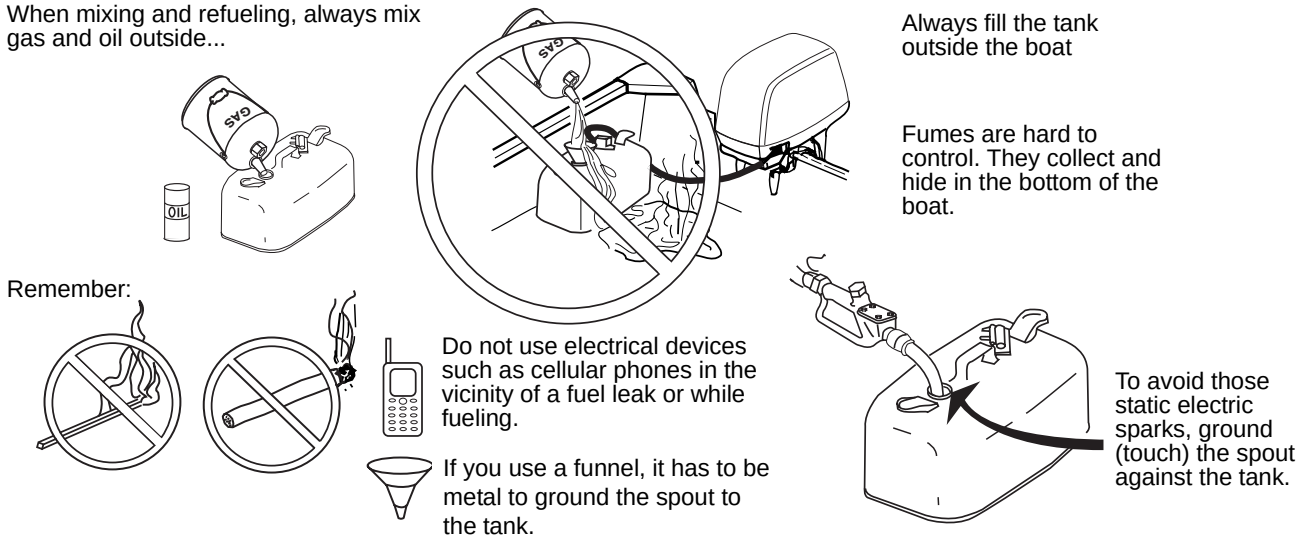

If electrical parts are replaced or even removed from the outboard, check the following:

Wire and high voltage lead routing

- As shown in service manual
- Away from moving parts which could cut wires or wire insulation
- Away from engine cover latches which can catch and cut insulation from high voltage spark plug leads

Sleeves, boots, shields

- In position (to avoid shock hazard)
- Not torn or cracked

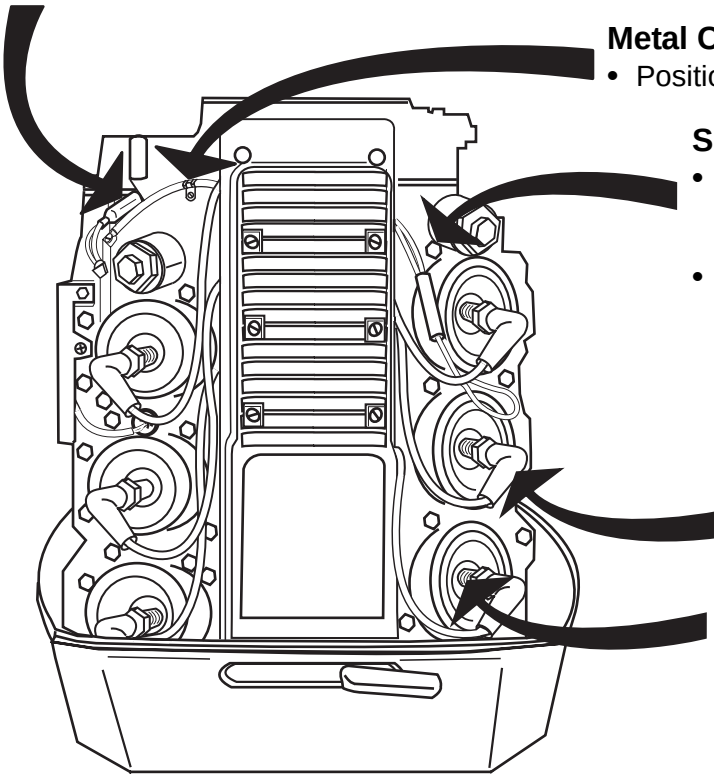

Metal Clamps – Tie Straps
- Position as shown in manual

Screws, Nuts, Washers
- Tighten firmly–these keep clamps in position and ends of wires from sparking
- Where lock washers are called for, use them

Spark Plug Boots
- Not torn or cracked
- Fully pushed onto spark plug

Spark Plugs
- Avoid rough handling that could crack ceramic part of plug. (Sparks may jump across outside of plug.)

In transom area:

All Connections
- Clean
- Tight

(Prevents sparks)

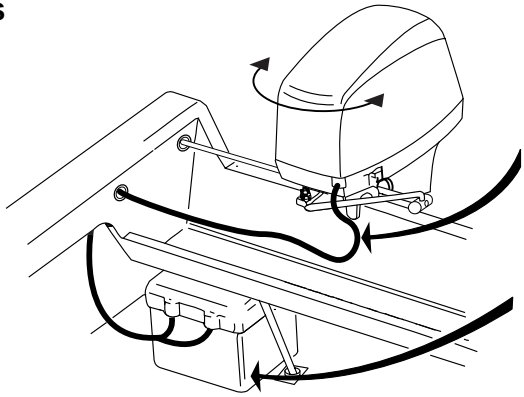

Electric Cable
- Not rubbing on sharp objects
- Enough slack to allow full turning without pull loads on cable (prevents sparks)

Batteries
- Secure in approved battery box or battery tray
- Battery terminals insulated
- No strain on cables

After repair on any part of the fuel system, pressure test engine portion of fuel system as shown:

When Storing:

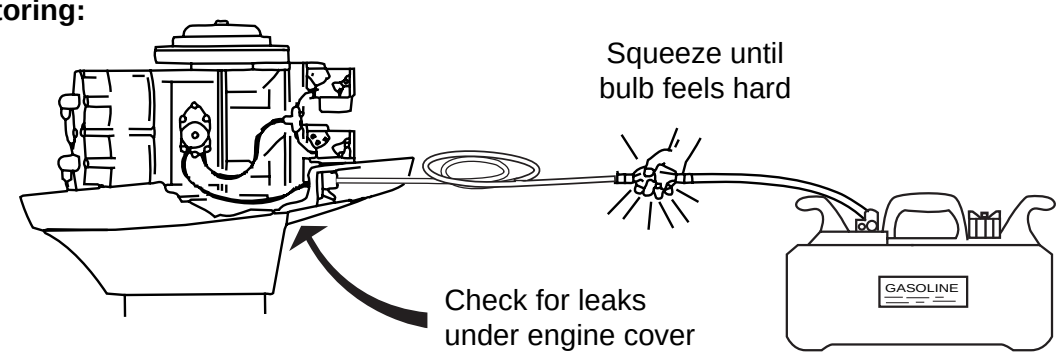

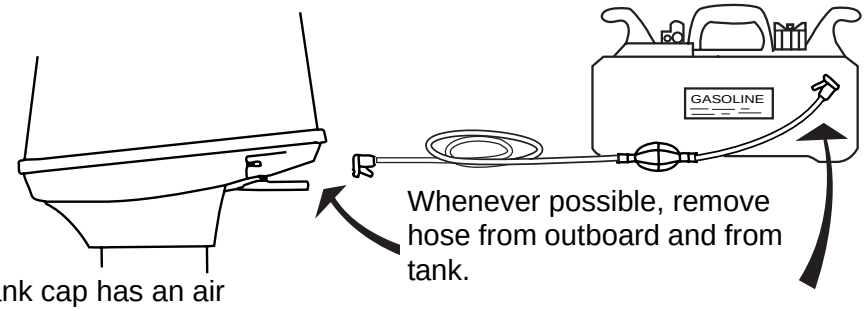

If tank cap has an air vent valve, make sure it is closed.

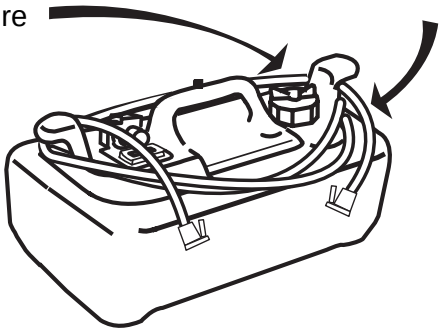

Store hose around ears of tank. This way, gasoline is trapped in tank and not in the hose, where it might leak onto the floor if the hose deteriorates.

If gasoline tank is stored indoors, do not put it in a room having an appliance with a pilot light or where electrical appliances or switches (which may spark) will be used.

When Running:

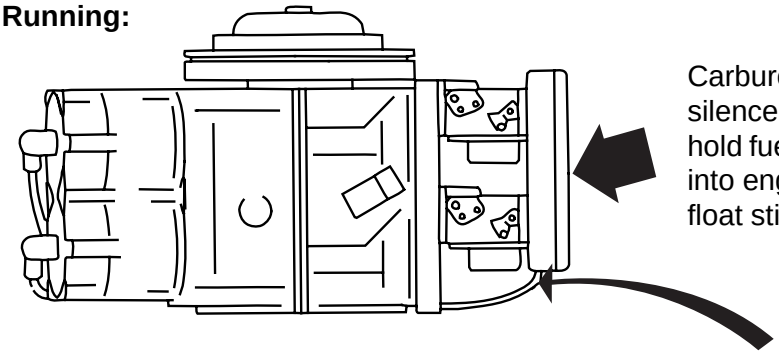

Carburetor air intake silencer will catch and hold fuel which may flood into engine if carburetor float sticks.

- **Make sure silencer and its gaskets are on engine and drain hose is in place.**
- **Air silencer mounting screws are special lock screws. Use only the special screws.**

Outboard Mounting System and Safety

The mounting system includes:

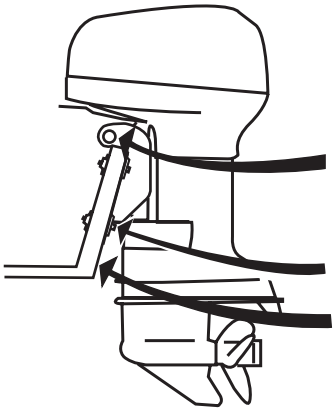

- outboard parts
- bolts, nuts, and washers
- boat's transom

What is most important?

- Outboard must **stay** in position on boat's transom.

What could happen?

Outboard may

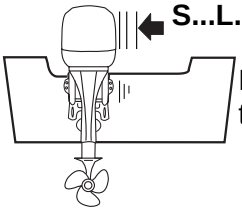

S...L...I...D...E on transom

Boat may turn and be hard to steer.

Outboard may

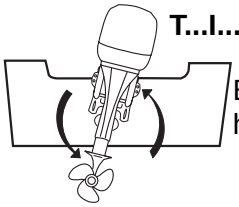

T...I...L...T on transom

Boat may turn and be hard to steer.

- If outboard hits something solid and does not stay on the transom, boat occupants may be injured from the outboard or its parts entering the boat.

Boat's transom could break away.

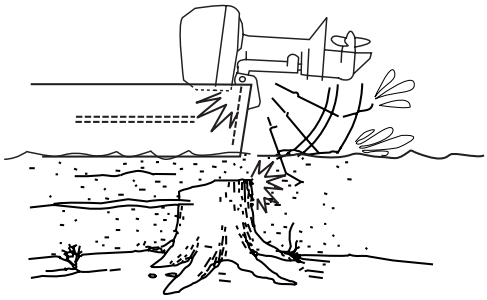

Outboard may be lost overboard. Boat may **SINK**.

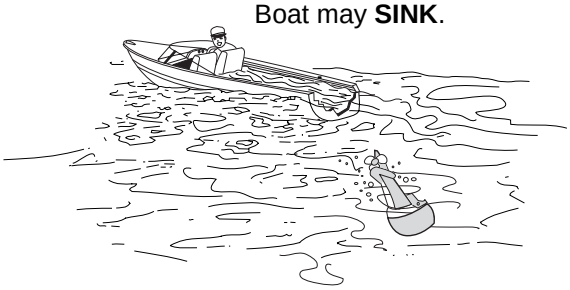

How Can Loss of Mounting Be Minimized?

- **Read**, **understand**, and **follow** manufacturer's **instructions.**
- Follow warnings marked "⚠" closely.

If weakened, parts could fail later on the water, when not expected

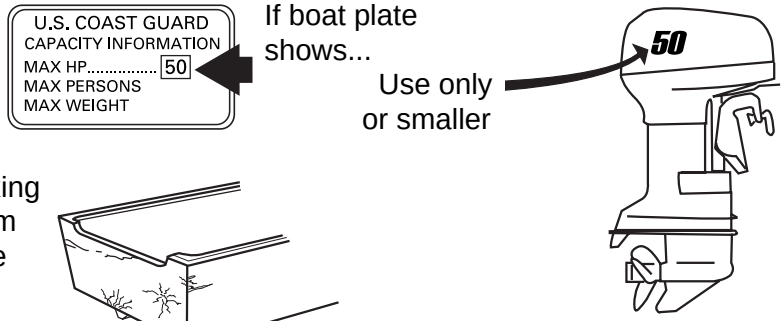

If boat plate shows...

Use only or smaller

When rigging or fixing any boat, if transom looks weak, tell the owner.

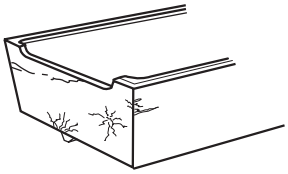

If transom is curved, outboard may come loose.

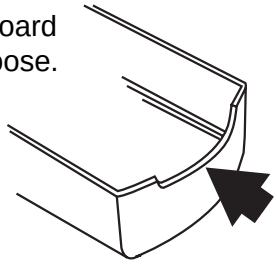

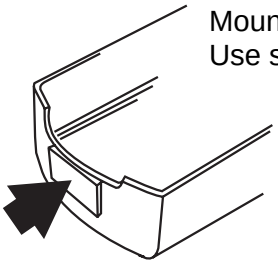

Mount on flat surface only. Use shims to make surface flat.

Use bolts, nuts, and washers supplied with outboard. They are usually special, and will not rust or weaken.

If owner tells you “I hit something really hard...”

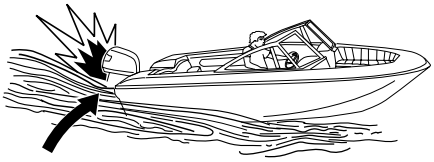

Check for a high speed blow to the lower unit.

OR...

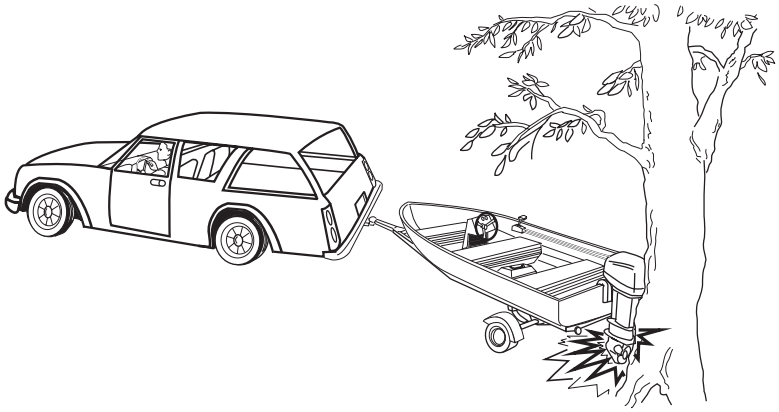

“I was backing up and I think the outboard may have hit a tree or something.”

Check for a slow, heavy squash to the outboard.

- Look for damaged parts and loosened nuts and bolts in both the steering and mounting systems. Replace damaged parts.

Outboard Hydraulic Tilt/Trim Shock Absorption System and Safety

What is most important?

- Shock absorption system must always be ready to absorb some blows to the lower parts of the outboard.
- Outboard must not trim in too far suddenly.

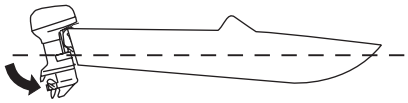

What can happen?

Without shock protection, a blow like this could cause serious damage to the outboard and injury to boat occupants from the outboard or its parts entering the boat. Transom could break away and outboard may be lost overboard.

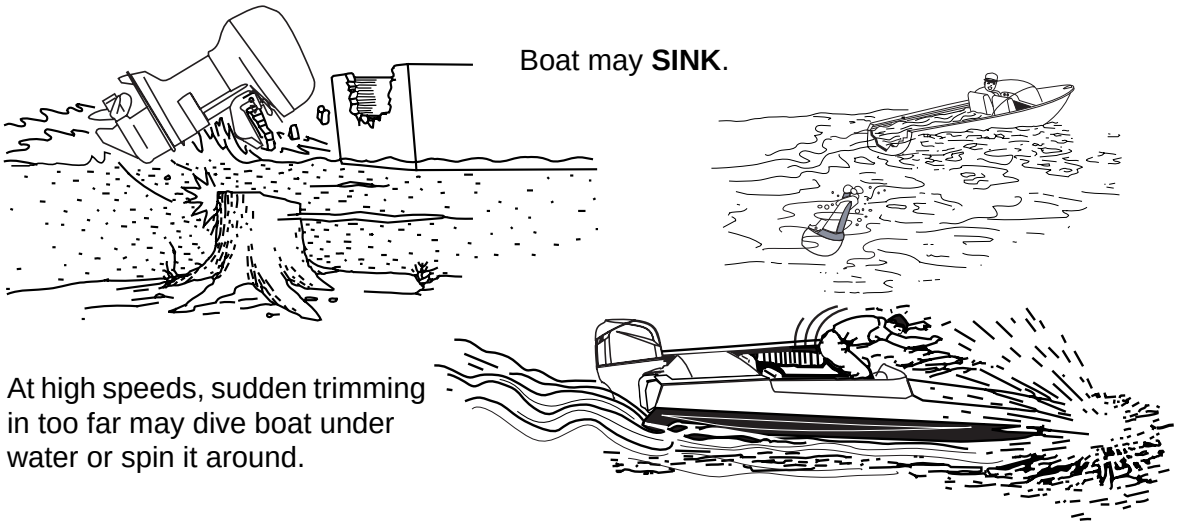

How can possible conditions be minimized?

- **Read**, **understand**, and **follow** manufacturer's **instructions.**
- Follow warnings marked "⚠" closely.
- Test your work whenever possible.
- If oil leaks are seen in service areas, determine source. Keep reservoir filled.
- If outboard is hydraulic tilt/trim model, always return rod to hole position determined by boat operator and make sure angle adjusting rod retain is in locked position.

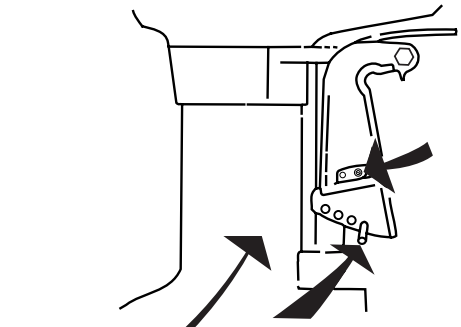

Make sure manual release valve is closed tight. Torque to 45 to 55 in. lbs. (5.1 to 6.2 N·m).

If left open, outboard has no shock protection.

Trimming "in" too far can happen when angle adjusting rod is not in the **right** hole or is not in **any hole** (lost).

Outboard Emergency Stop System and Safety

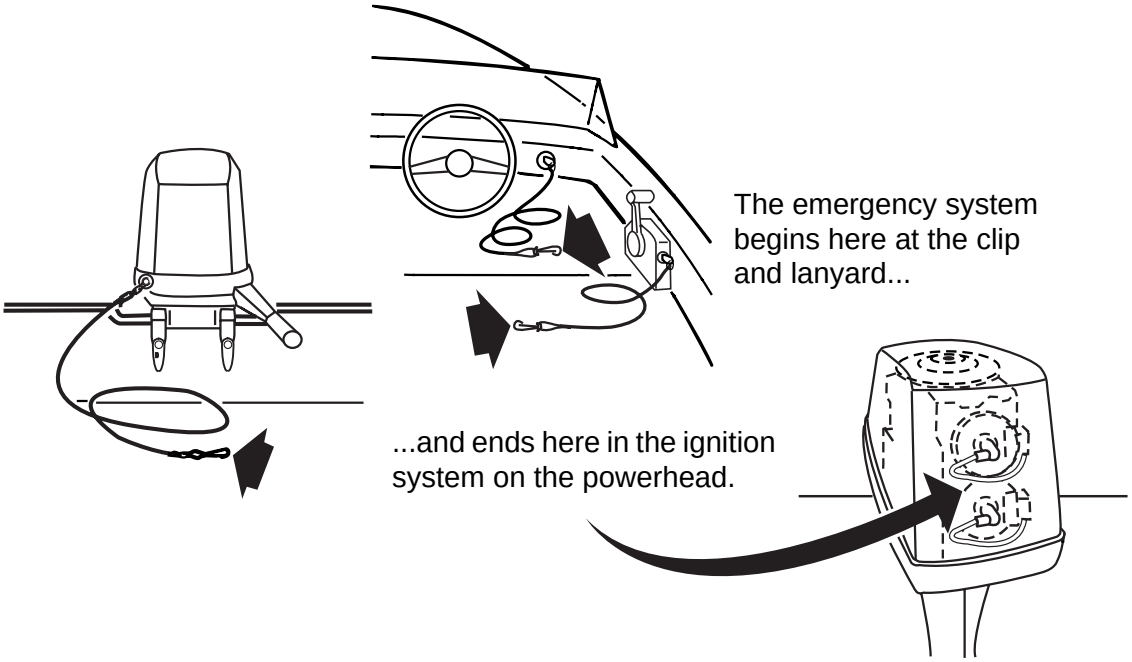

What is most important?

- The emergency stop system must **STOP** the engine when the clip is removed or the lanyard pulled from the emergency stop / key switch.

What could happen?

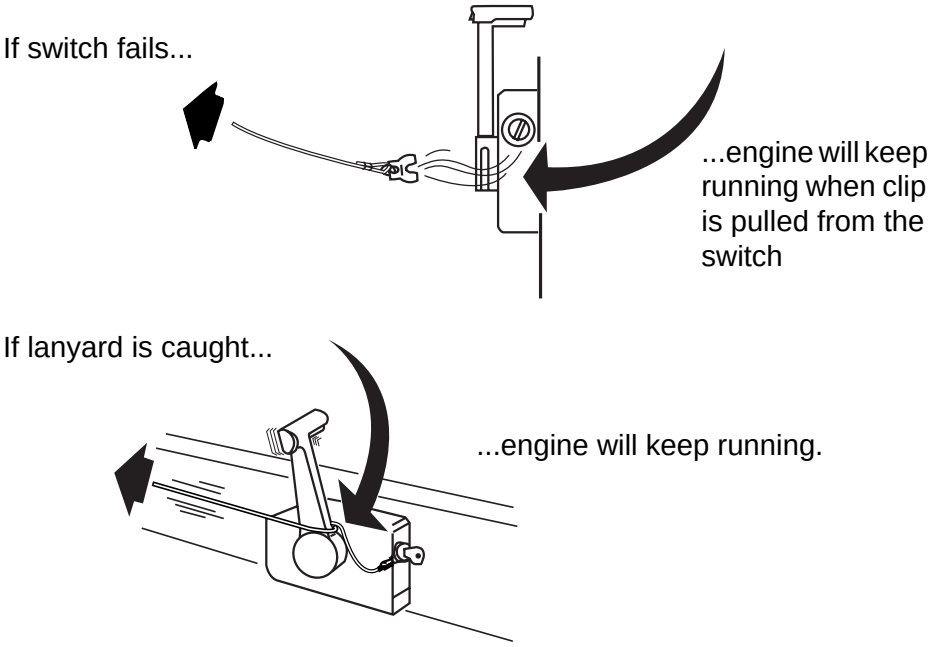

What could happen?

If lanyard is cut or frayed...

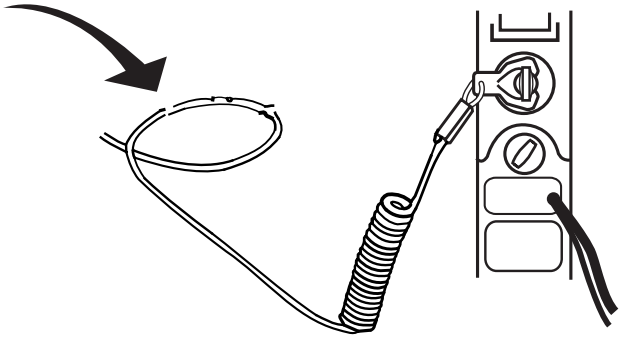

...lanyard or clip may break when pulled...

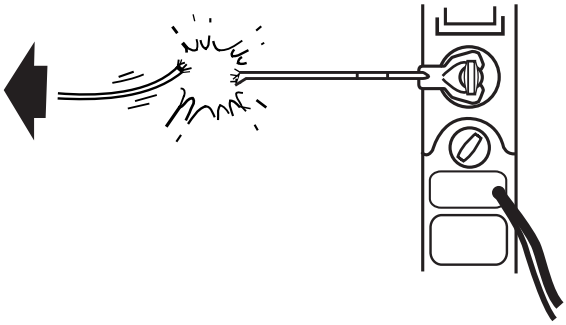

If engine does **NOT** stop when lanyard is pulled, an operator thrown from the boat could be hit as boat circles area. Or, boat may not turn but leave area as a runaway. Operator may drown and boat **WILL** run into something.

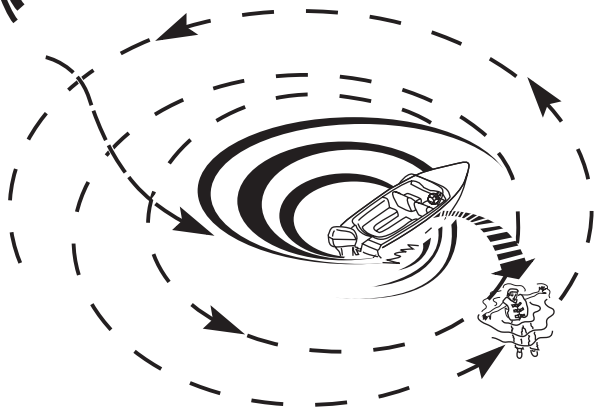

How can failure of the emergency stop system be minimized?

When rigging or after servicing

- **Read**, **understand**, and **follow** manufacturer's **instructions**
- Follow warnings marked "⚠" closely.
- Assemble parts carefully.
- Inspect lanyard for cuts or fraying; clip for wear. Replace with original parts. Do not substitute.
- Locate control box and other items in area to keep lanyard from being caught.
- **ALWAYS TEST EMERGENCY STOP SYSTEM. PULL LANYARD. ENGINE MUST STOP. IF IT DOES NOT, REPAIR BEFORE NEXT USE.**

Summing up

Now you know some things that can take the joy out of boating.

No doubt about it—proper safety takes time!

- Reading and understanding instructions
- Re-reading warnings marked "⚠"
- Putting parts together correctly
- Making correct adjustments
- Testing your work

And making sure

- Worn or damaged parts are replaced
- Replaced parts are like originals in every way
- Customer is told of things which need attention

But, do you really want the alternative?

MARINE PRODUCTS AND THE SAFETY OF PEOPLE WHO FIX THEM

The first part of this Safety section talked about safe boating and how you, the technician, can help keep it safe for the boater. But what about you? Technicians can be hurt while:

- Rigging boats
- Troubleshooting problems
- Fixing components
- Testing their work

Some of these safety issues you will know, others you may not.

Handling Outboards

When lifting outboards

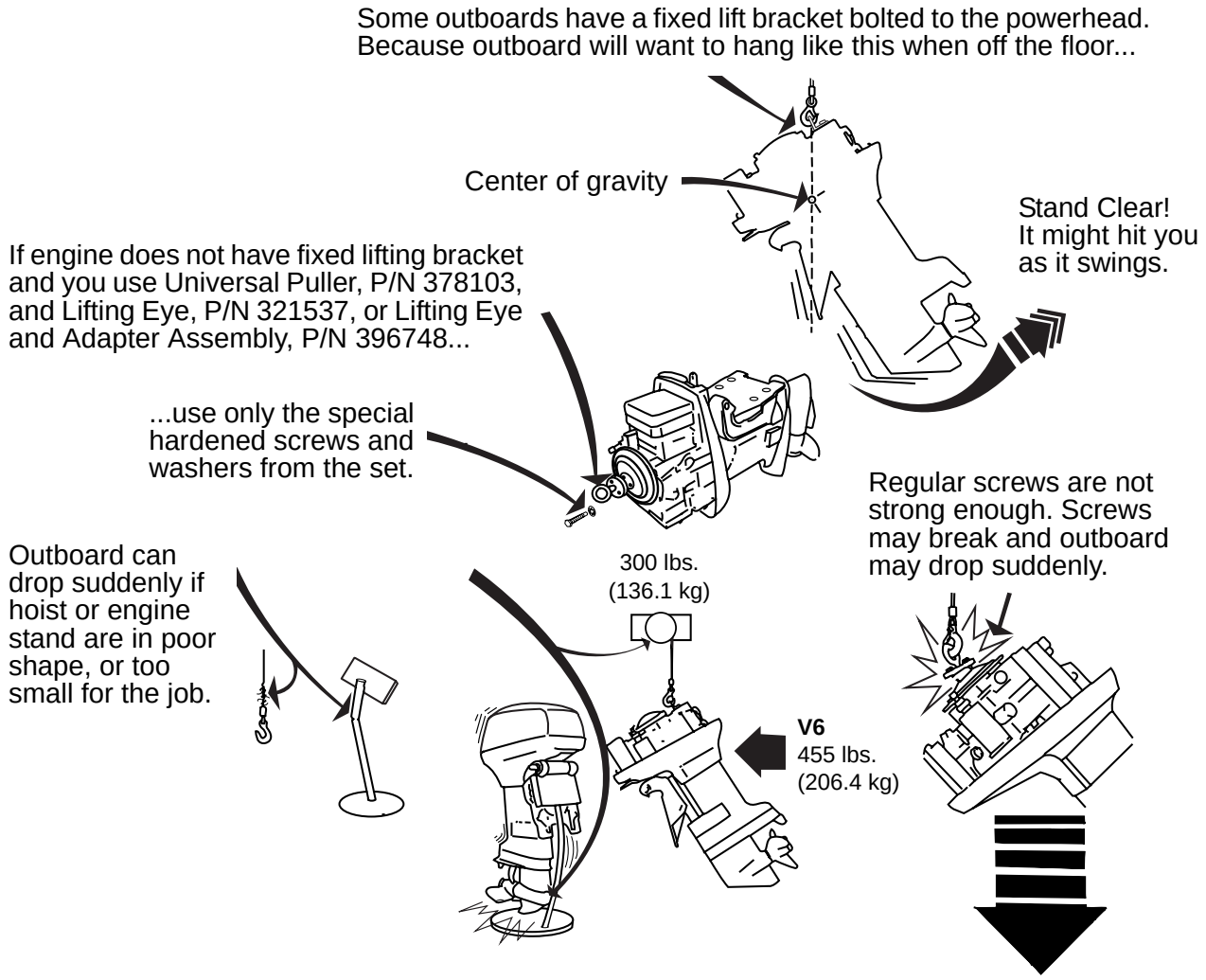

- Make sure shop aids have extra capacity, and keep them in good repair.

Running outboard with engine cover removed

Engine cover is a guard. When you remove cover/guard to work on the outboard, remember: loose clothing (open shirt sleeves, neckties), hair, jewelry (rings, watches, bracelets), hands and arms can be caught by the spinning flywheel.

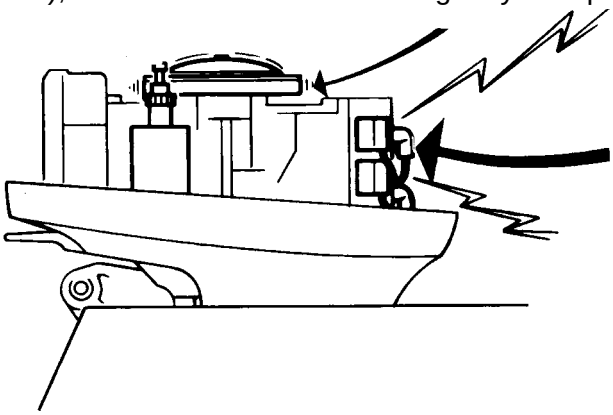

Handling high voltage parts like spark plugs and coils can shock you and may cause you to recoil into the rotating flywheel.

- Two people working together on a live outboard must look out for each other. Never, ever, use the key to start the outboard before signaling your partner. He may be leaning over the outboard with hands on the flywheel, handling a “hot” electrical part, or near the propeller.

Outboard starting at the wrong time

When you do things that turn the flywheel like:

- Off-season storage fogging (oiling) of outboard;
- Removing propeller with a powered tool;
- Electrical system checks;
- Servicing the flywheel; or
- Any other actions **ALWAYS...**

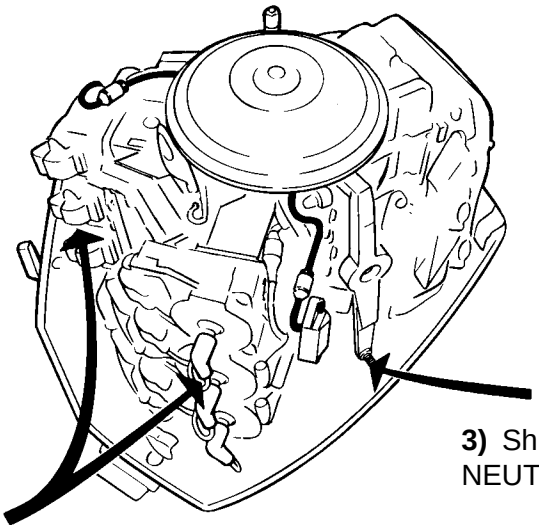

1) Turn key switch OFF

2) Twist and remove ALL spark plug leads

3) Shift to NEUTRAL

Check prop shaft. Is outboard really in NEUTRAL?

NO SPARK ➡ **NO START** ➡ **NO SURPRISES**

Running outboard too fast (Overspeeding)

- “Too fast” means running faster than outboard normally runs on boat.

Running too fast can happen when:

1) Using a flushing device...

Turn on water before starting outboard. Keep engine speed below 2000 RPM. With no load, outboard will run too fast very easily. Wear eye protectors.

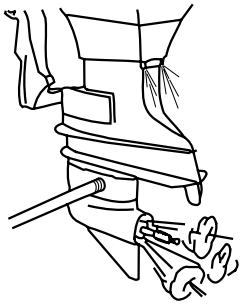

2) Running with the wrong test wheel...

This may happen if outboard runs too fast.

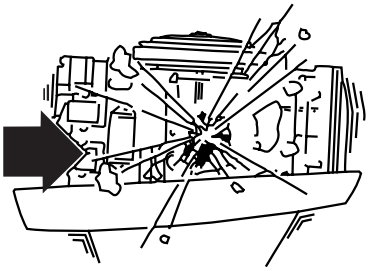

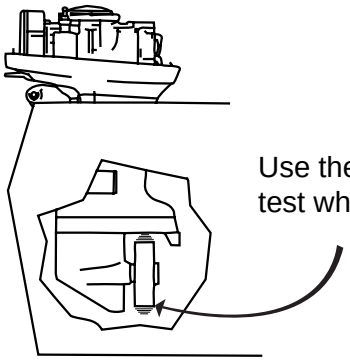

Running outboards: Exhaust fumes

DANGER

DO NOT run the engine indoors or without adequate ventilation or permit exhaust fumes to accumulate in confined areas. Engine exhaust contains carbon monoxide which, if inhaled, can cause serious brain damage or death.

- Whenever running the engine, assure there is proper ventilation to avoid the accumulation of carbon monoxide (CO), which is odorless, colorless, and tasteless, and can lead to unconsciousness, brain damage, or death if inhaled in sufficient concentrations. CO accumulation can occur while docked, anchored, or underway, and in many confined areas such as the boat cabin, cockpit, swim platform, and heads. It can be worsened or caused by weather, mooring and operating conditions, and other boats. Avoid exhaust fumes from the engine or other boats, provide proper ventilation, shut off the engine when not needed, and be aware of the risk of backdrafting and conditions that create CO accumulation. In high concentrations, CO can be fatal within minutes. Lower concentrations are just as lethal over long periods of time.

Running outboards: Propellers

DANGER

Contact with a rotating propeller is likely to result in serious injury or death. Assure the engine and prop area is clear of people and objects before starting engine or operating boat. Do not allow anyone near a propeller, even when the engine is off. Blades can be sharp and the propeller can continue to turn even after the engine is off. Always shut off the engine when near people in the water.

Eye protection

Eyes need protection when:

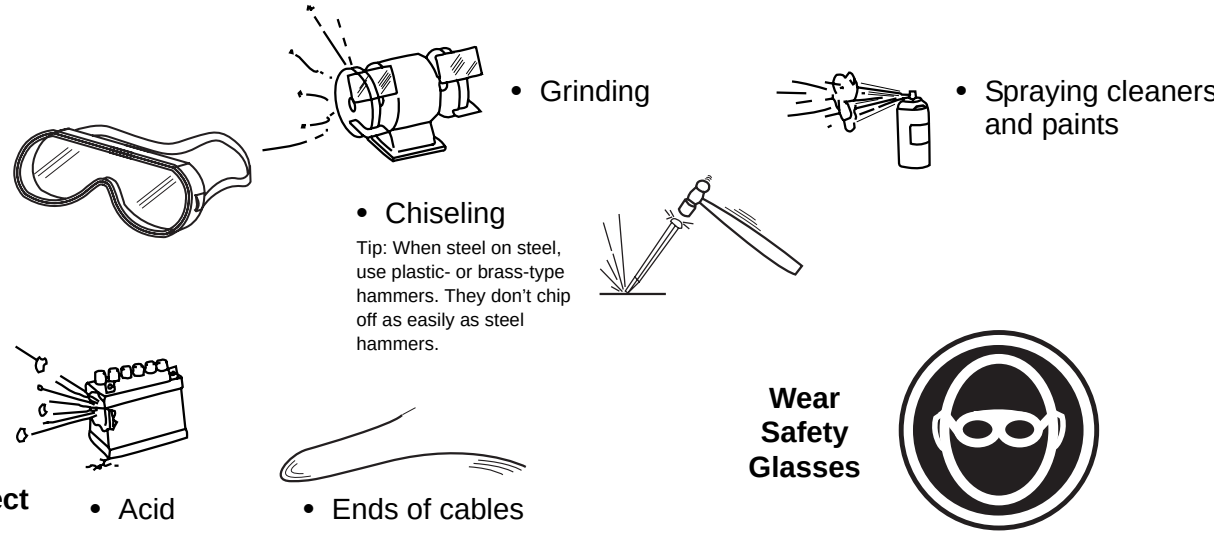

Protect eyes from:

- Acid
- Ends of cables

Handling Lead/Acid Batteries

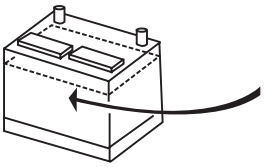

Strong acid solution (sulfuric acid)

If solution gets into eyes, wash and contact a doctor immediately.

If spilled or splashed on any part of body...

Wash with lots of water.

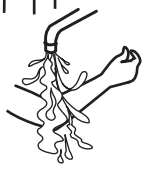

Charging lead acid batteries

1) Attach and remove these cables with charger UNPLUGGED from 110 V wall socket. (This prevents shocks if charger is defective.)

2) Observe correct polarity when connecting these larger leads.

3) Always charge in a well ventilated area. Charging causes acid solution to give off hydrogen gas through the vents in the caps. **Make sure vents are open.** If clogged, pressure inside may build. Battery may EXPLODE.

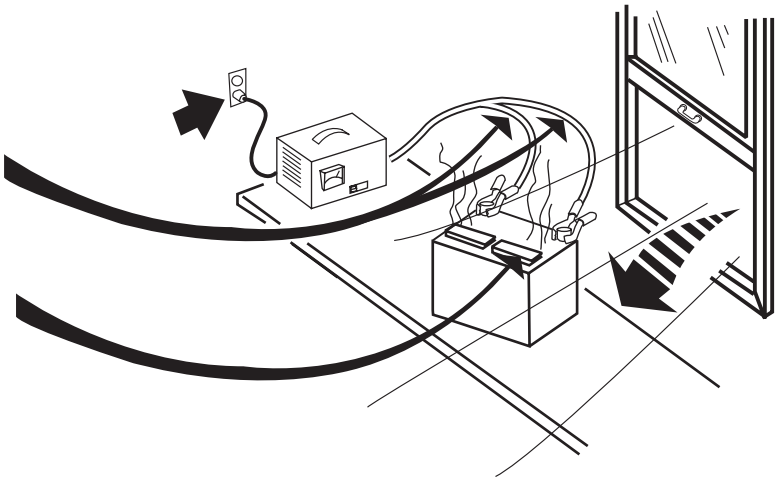

Battery gas is explosive!

While charging or discharging, remember:

- No smoking
- No flames
- No sparks

Never remove charger cables from battery posts. It is a sure way to make a lot of sparks in an area surrounded by battery gas.

DO NOT check battery charge by placing metal objects across posts. You will make sparks and serious burns are possible.

After charging:

- Shut off charger
- Pull charger plug out of 110 V outlet
- Take charger cables off battery posts

Gasoline – Handle With Care!

Gasoline vapor and air mixtures explode easily and violently when mixed as shown...

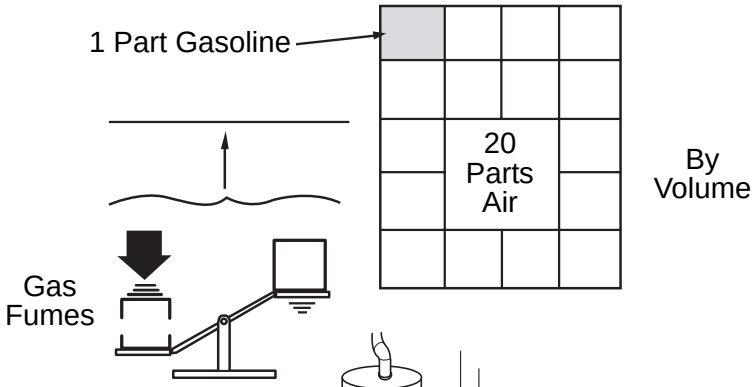

When you smell ANY odor of gasoline, explosion is possible.

Gasoline fumes are heavy and will sink to the lowest point in the boat or room and will STAY there, WAITING...

If the air around you is calm, the pilot light in the heater could **ignite** the heavy fumes before your nose ever **smells** the fumes.

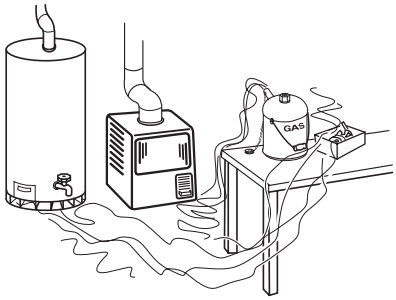

What can you do?

Store gasoline in sturdy, approved, sealed gas can and keep outside.

- Always store gasoline outside in a safe can (flame arrester and pressure relief valve in pour spout).
- Fill portable tanks outside of boat. Spillage will collect in bottom of boat.
- Use fuel as fuel ONLY, **not** for a cleaner or degreaser.
- If fumes are smelled in shop, basement, or garage, **immediately**:
  - Put out open flames, cigarettes, sparking devices;
  - Wipe up spill or leak;
  - Get towels and rags outside fast;
  - Open doors and windows; and
  - Check **lowest** area for fumes.

Be aware of items in and around repair area which can ignite fumes. Control them if fumes are smelled.

- Matches, cigarettes, blow torches, welders
- Electric motors (with unsealed cases)
- Electric generators (with unsealed cases)
- Light switches
- Appliance pilot lights or electric ignitors (furnace, dryer, water heaters)
- Loose wires on running outboards
- Other variables which may ignite fumes

How many of these are in your repair area?

Hazardous Products

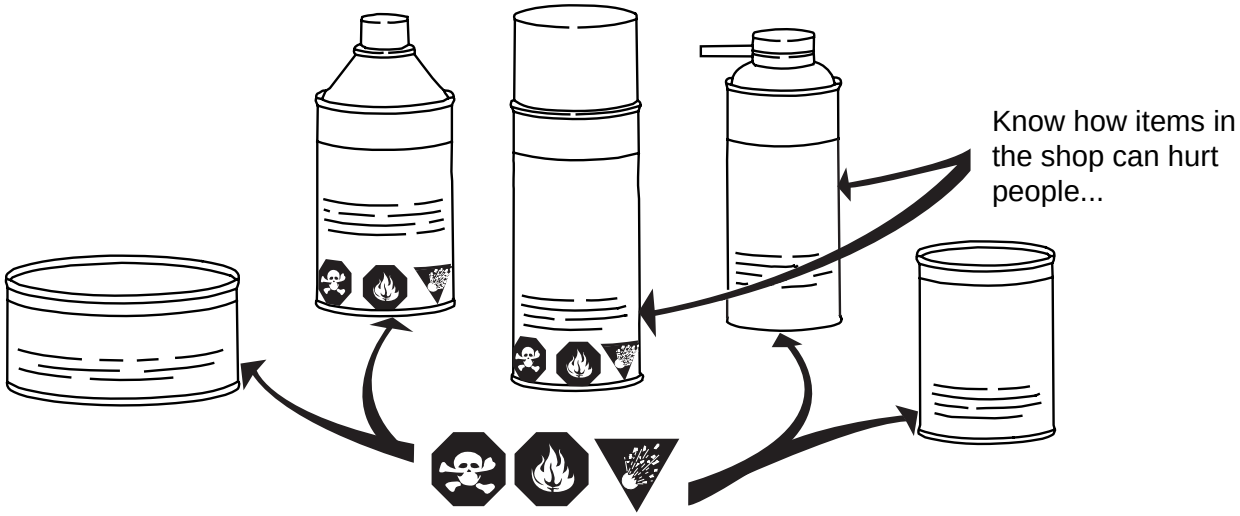

READ

- “How and where to use”
- “How to give First Aid.” Have recommended First Aid materials on hand should an emergency arise
- “How to dispose of can”

It’s all on the **back of the can or bottle label.**

And remember: Little children are very curious and will try to taste everything so **keep containers away from children!**

Safety Awareness Test

The Technician's Safety Awareness Test....

1) Did you read this Safety section from page S–1 to page S–24?

2) Are you ready to take responsibility for the safe maintenance practices and procedures of your repair shop, co-workers, and technicians?

3) Do you understand all the safety precautions and instructions contained in this entire service manual?

4) Will you follow all safety warnings, precautions, instructions and recommendations outlined in this service manual?

5) Do you understand that the service manual as a whole and this Safety section, in particular, contain essential information to help prevent personal injury and damage to equipment and your customers?

6) Have you received training related to common shop safety practices to protect yourself and others around you?

7) When replacement parts are required, will you use *Evinrude®/Johnson® Genuine Parts* or parts with equivalent characteristics, including type, strength and material?

8) Are you ready to follow the recommendations in this service manual before you service any boat or outboard?

9) Do you understand that safety-related accidents can be caused by carelessness, fatigue, overload, preoccupation, unfamiliarity of operator with the product, drugs and alcohol, just to name a few?

INDEX

A

Abbreviations 12
Accelerator Pump
- Description 115
- Lever Gap Adjustment 106

Accessories
- Fuel Filter Assembly, P/N 174176 33

Adjustments
- Accelerator Pump Lever 106
- Clutch Lever 203
- Dashpot 59
- Driveshaft Thrust Play 222
- Gear Backlash 220
- Propeller Shaft Thrust Play 223
- Tachometer Pulse Setting 47
- Throttle Cable 110
- Throttle Linkage 109
- Trim Tab 199

Anode
- Anti-Corrosion 54
- Continuity Check 54

B

Batteries
- Cables 32
- Charging System 84
- Connections 32
- Installation 32
- Requirements 32
- Cleaning and Servicing 55
- Connections 55
- Minimum Recommendation 17

Battery Charging System
- Components 84
- Operation 84

Break-In
- Procedure 45

C

Camshaft
- Inspection 140
- Specifications 140

Carburetor 101
- Accelerator Pump Lever 106
- Assembly 105
- Cleaning and Inspection 104
- Dashpot 59
- Disassembly 103
- Float Check 105
- Float Drop Setting 16
- Impulse Plug 57
- Installation 107
- Needle Valves 104
- Operation 114
- Removal 101
- Synchronizer Gauge Adapter 57
- Synchronizing 56
- Throttle Valves 56
- Type 16

Caution Lamp Test 79
Caution System
- Description 78
- Low Oil Pressure 78
- Overheat 78
- Over-Revolution 78

Charge Coil
- Cranking Output Test 85
- Description 70
- Installation 82
- Removal 81
- Resistance Test 85
- Tests 75

Clamp Screw 174
- Cleaning and Inspection 174

Connecting Rod
- Bearings 158
- Inspection 157

Control Cable
- Identification 40
- Installation 41
- Routing 31

Cooling
- Thermostat 17
- Type 17

Water Intake Screens 63
Cooling System
Hose Routing 250
Operating Temperature 47
Servicing 169
Thermostat 169
Turbulence 34
Corrosion
Anodes 54
Battery 56
Driveshaft 205
Exhaust Housing 174
Exterior 55
Gearcase Housing 205
Metallic Components 55
Crankcase
Assembly 167
Disassembly 150
Crankpin
Inspection 157
Crankshaft
Assembly 166
Bearings 160
Inspection 159
Installation 164
Removal 150
Crankshaft Position Sensor
Description 70
Installation 82
Location 70
Removal 81
Tests 76
Cylinder
Inspection 152
Cylinder Bore 153
Cylinder Compression Test 118
Cylinder Head
Assembly 147
Disassembly 137
Inspection 139
Installation 136
Removal 136
Cylinder Temperature Sensor Test 80

D

Dashpot 59
Drilling and Hardware Diagram 36
Driveshaft
Assembly 216
Bearing Housing Seals 212
Disassembly 209
Installation 217
Removal 207

E

Electric Starter System
Remote Control Models 87
Tests 90
Tiller Handle Models 87
Troubleshooting
Remote Control Models 89
Tiller Handle Models 88
Emergency Stop Switch 46
Description 71
Installation 30
Test 77
Engine Fuse 17
Engine Lubrication System
Operation 171
Engine Oil Pressure Test 119
Exhaust Housing
Assembly 184
Cleaning and Inspection 174
Disassembly 182
Inspection 174
Installation 187
Removal 181
Exterior Finish Protection 55

F

Flywheel
Description 70
Installation 81
Removal 80
Fuel Filter 62
General 111
Fuel Pump 111
Assembly 112
Disassembly 111
Inspection 112
Installation 113
Removal 111

Fuel System
Additives 16, 44
Carburetor Servicing 101
Fuel Filter 33, 62
Fuel Hose Connections 100
Fuel Leakage Check 100
Fuel Pump 111
Fuel Requirements 44
Hose Routing 250
Hoses 33
Minimum Octane 44
Operation 114
Priming 33
Requirements 33
Running Checks 46
Throttle Control 109
Fuse Case
Removal 87
Fuse Continuity 85

G

Gauges
SystemCheck 31
Gearcase
Assembly 215
Components 196
Disassembly 205
Draining 63
Installation 202
Leak Test 201
Lubricant Filling 63
Lubricant Inspection 63
Removal 201
Gearcase Inspection
Driveshaft 205
Gearcase Anode 205
Gearcase Housing 205
Water Intake Screen 205
Water Pump 205
Gearcase Lubricant
Draining 200
Filling 200
Inspection 200

H

Hoses
Fuel System 33

I

Idle Speed Adjustment 64
Ignition
Charge Coil 70
Charge Coil Test 75
Components 70
Crankshaft Position Sensor 70
Emergency Stop Switch 71
Flywheel 70
Ignition Coil 17
Ignition Coil Tests 74
Operation 72
Power Pack 70
RPM Limit 17
Timing Check 65
Troubleshooting 73
Ignition Coil
Description 71
Resistance Tests 74
Inspection Schedule 52

L

Low Oil Pressure Warning 78
Lubrication 16, 66
Changing Engine Oil 60
Checking Oil Level 60
Draining 60
Engine Lubrication System 171
Oil Pressure Test 119
Propeller shaft 66
Schedule 52
Shift linkage 66
Swivel Bracket 66
Throttle Linkage 66
Tilt Tube 66

M

Maintenance Schedule 52
Midsection
Cleaning and Inspection 174
Model Designation 7
Model Lists 8

Models Covered 6
Mounting the Engine 38
Hull Preparation 34

N

Neutral Start Protection 46
Neutral Switch
Continuity 90

O

Oil Filter
Maintenance 60
Replacement 61
Oil Pressure Switch
Installation 82
Removal 82
Test 79
Oiling System
Capacity 61
Engine Lubricant 45
Filling 61
Requirements 45
Operating Temperature 47
Overheat Warning 78
Over-Revolution Warning 78

P

Pinion Gear
Installation 217
Removal 207
Piston
Assembly 164
Inspection 153, 154
Installation 164
Removal 150
Piston Ring End Gap 16
Power Pack
Description 70
Test 77
Powerhead
Inspection and Servicing 139
Installation 125
Removal 120
Serial Numbers 6
Tests 118
Priming
Fuel System 33
Propeller
Inspection 198
Installation 49, 198
Removal 198
Selection 48
Test Propeller 16
Propeller Shaft
Assembly 218
Bearing Housing Installation 219
Bearing Housing Removal 206
Disassembly 206
Inspection 205
Propeller Shaft Bearing
Installation 212
Removal 210

R

Rectifier
Removal 87
Regulator
Removal 87
Remote Controls
Installation 31
Selection 30
Resistance Test
Rectifier 86
Regulator 86
Rigging
Boat 30
Lifting 37
MWS Harness 39
Outboard 34, 39
Water Pressure Gauge 43
Running Checks
Emergency Stop Switch 46
Fuel System 46
Neutral Start Protection 46
Operating Temperature 47
Water Pump Overboard Indicator 47

S

Safety S–1
Serial Number Location 6

Shift Linkage
Lubrication 66
Shift Rod
Assembly 215
Disassembly 210
Removal 209
Shimming 220
Shock Absorber 240
Shop Aids 25
Spark Plug Information 17
Spark Plugs
Maintenance 67
Recommended Type 17, 67
Replacement Schedule 53
Specifications 16
Starter Motor
Assembly 95
Disassembly 92
Inspection 93
Installation 97
Removal 91
Testing 93
Starter Motor Relay Test 90
Starter Switch
Continuity Test 90
Steering Arm
Installation 192
Removal 189
Steering Bracket
Removal (Tiller Models) 189
Steering Handle
Installation 176
Removal 175
Steering System
Drag Link 38
Mechanical Cables 37
Requirements 37
Stern Bracket
Installation 191
Removal 188
Stop Circuit 46
Symbols 13
SystemCheck
Gauges 31
Requirement 31

T

Technical Data 16
Thermostat
Inspection 169
Installation 169
Operating Temperature 47, 169
Removal 169
Throttle
Adjustment 110
Cable Installation 110
Linkage Adjustments
Remote Models 109
Tiller Models 109
Lubrication 66
Tiller Handle
Installation 176
Removal 175
Tilt Assist Cylinder
Components 177
Installation 179
Removal 177
Timing Chain
Inspection 133
Installation 133
Removal 131
Tools
2-pin Connector Test Cord, P/N 5034617 19
4-pin Connector Test Cord, P/N 5034228 19
6-pin Connector Test Cord, P/N 5034618 19
Bearing Installer/Remover, P/N 342685 21
Bushing, P/N 5034620 21
Carburetor Synchronizer Set, P/N 5034619 20
CD Peak Reading Voltmeter, P/N 507972 19
Cylinder Bore Gauge, P/N 771310 22
Driveshaft Holder, P/N 345834 20
Flywheel Holder, P/N 5034227 22
Fuel Vacuum Tester, P/N 390954 20
Gearcase Adapter, P/N 772269 20
Gearcase Filler, P/N 501882 20
Gearcase Pressure Tester, P/N 507977 20
Gearcase Vacuum Tester, P/N 507982 20

Ignition Analyzer, P/N 501890 19
Large Puller Jaws, P/N 432129 21
Lifting Eye, P/N 321537 17
Oil Pressure Gauge Adapter, P/N 350930 22
Oil Pressure Gauge, P/N 5000900 22
Pinion Bearing Removal/Installation, P/N 5034763 20
Pinion Bearing Remover and Installer Kit, P/N 391257 21
Propeller Shaft Bearing Installer, P/N 5034774 20
Propeller Shaft Bearing Remover, P/N 5034764 20
Propeller Shaft Remover, P/N 5034762 21
Puller Bridge, P/N 432127 21
Replacement Jaws (large), P/N 437954 21
Replacement Jaws (small), P/N 437952 21
Replacement Tip Set, P/N 395967 21
Retaining Ring Pliers, P/N 331045 21
Seal Installer, P/N 326545 21
Slide Hammer Adapter, P/N 340624 21
Slide Hammer, P/N 391008 21
Small Puller Jaws, P/N 432131 21
Spacer, P/N 350932 20
Spark Tester, P/N 508118 19
Stopper, P/N 5034621 21
Syringe, P/N 346936 24
Tachometer/Timing Light, P/N 507980 19
Temperature Gun, P/N 772018 24
Test Wheel, P/N 5032468 21
Tie Strap Installation Tool, P/N 323716 24
Tilt Tube Nut Wrench, P/N 912084 24
Torque Wrench Extension, P/N 912031 24
Universal Puller Set, P/N 378103 24, 17
Valve Lifter Attachment, P/N 5000899 23
Valve Lifter, P/N 346186 148
Valve Spring Compressor, P/N 346186 23

Torque Specifications 18

Trim and Tilt
Air Bleeding 228
Down Circuit 239
Installation 230
Manual Release 241
Motor Relay Test 227
Oil Level Check 228
Operation 237
Removal 229
Shock Absorber 240
System Wiring 226
Thermal Valve 242
Up Circuit 238
Wiring Diagram 226

Trim and Tilt Motor
Assembly 235
Disassembly 233
Inspection 233
Installation 235
Removal 232

V

Valve Clearance
Adjusting 68
Checking 68

Valve Guide
Diameter 142
Inspection 142
Replacement 143

Valve Head
Inspection 144
Thickness 145

Valve Seat
Contact Width 145
Inspection 144
Refacing 146

Valve Spring
Inspection 146
Length 146

Valve Stem
Diameter 142
Inspection 142

W

Water Cooling System
Operation 170

Water Intake Screens
Inspection 63

Water Pump
Assembly 205
Disassembly 204
Inspection 204
Overboard Indicator 47

MWS Instrument Wiring Harness

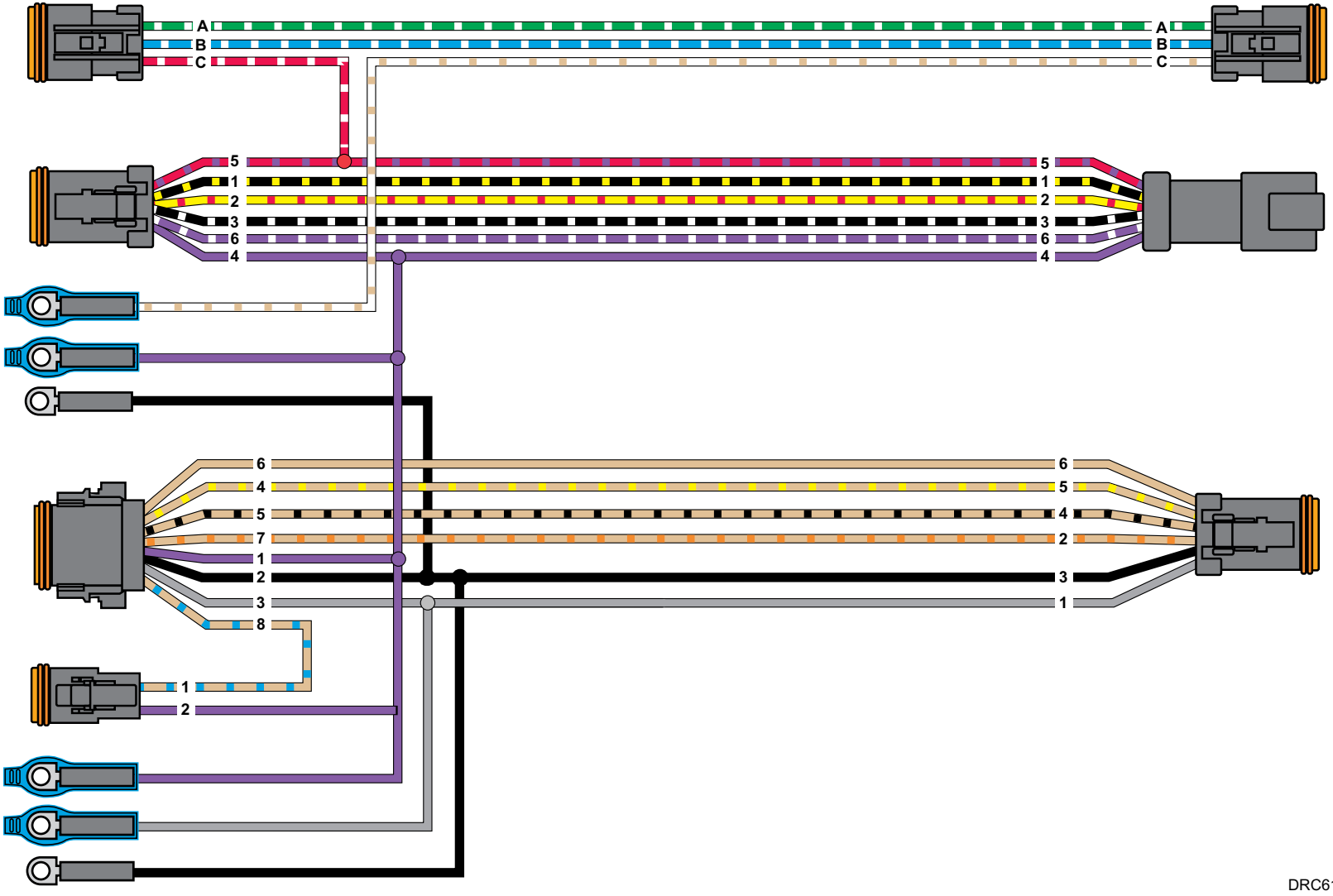

DRC6165R

MWS Key Switch and Neutral Safety Switch

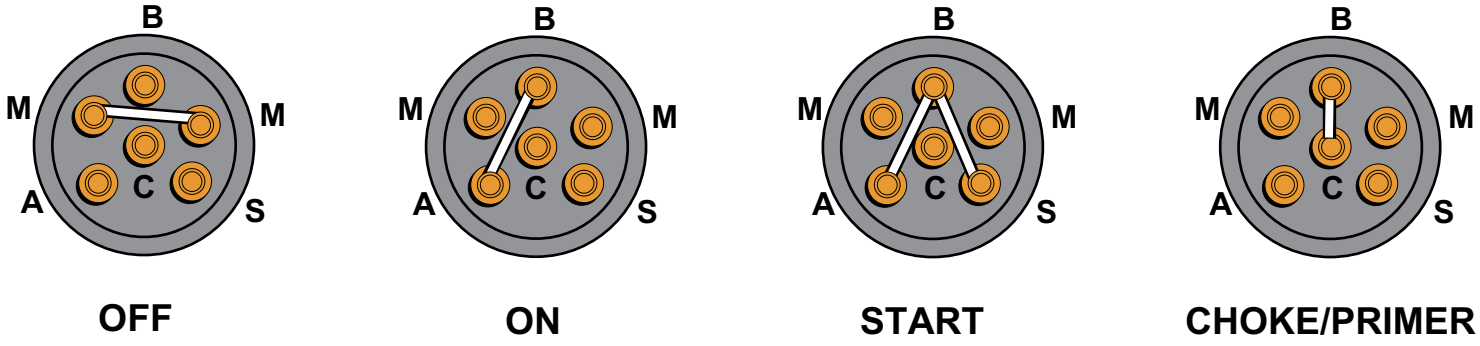

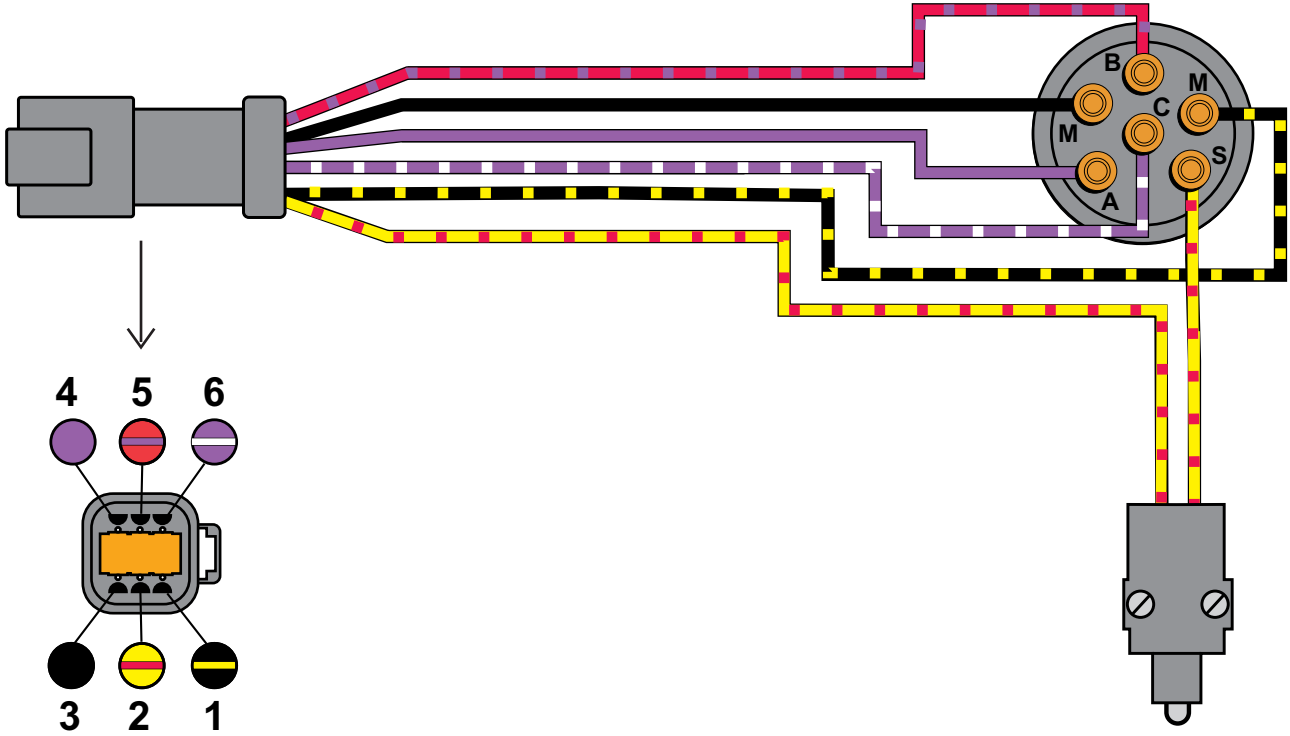

000954

MWS DASHBOARD

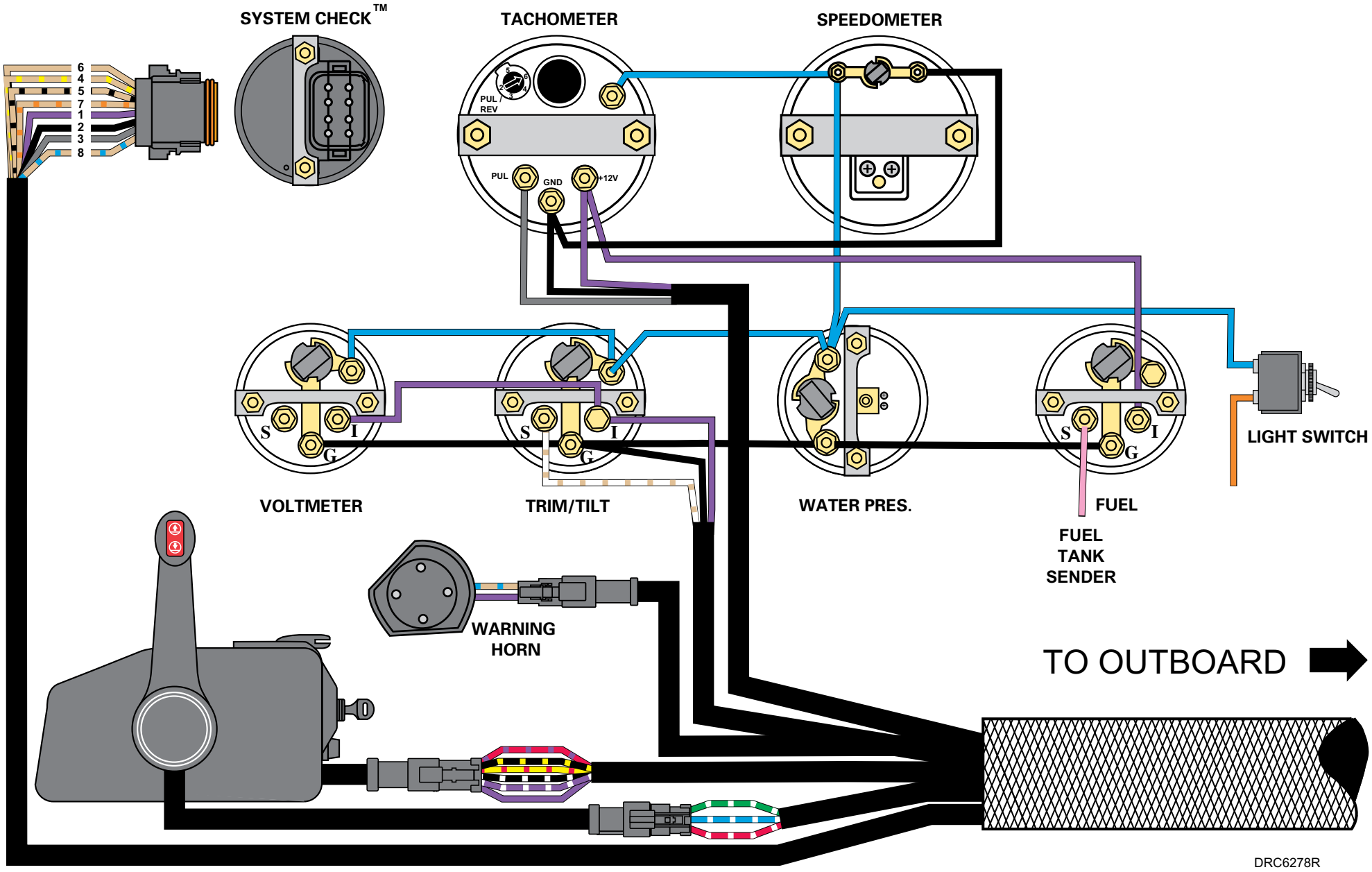

30 HP 4-STROKE
REMOTE MODELS

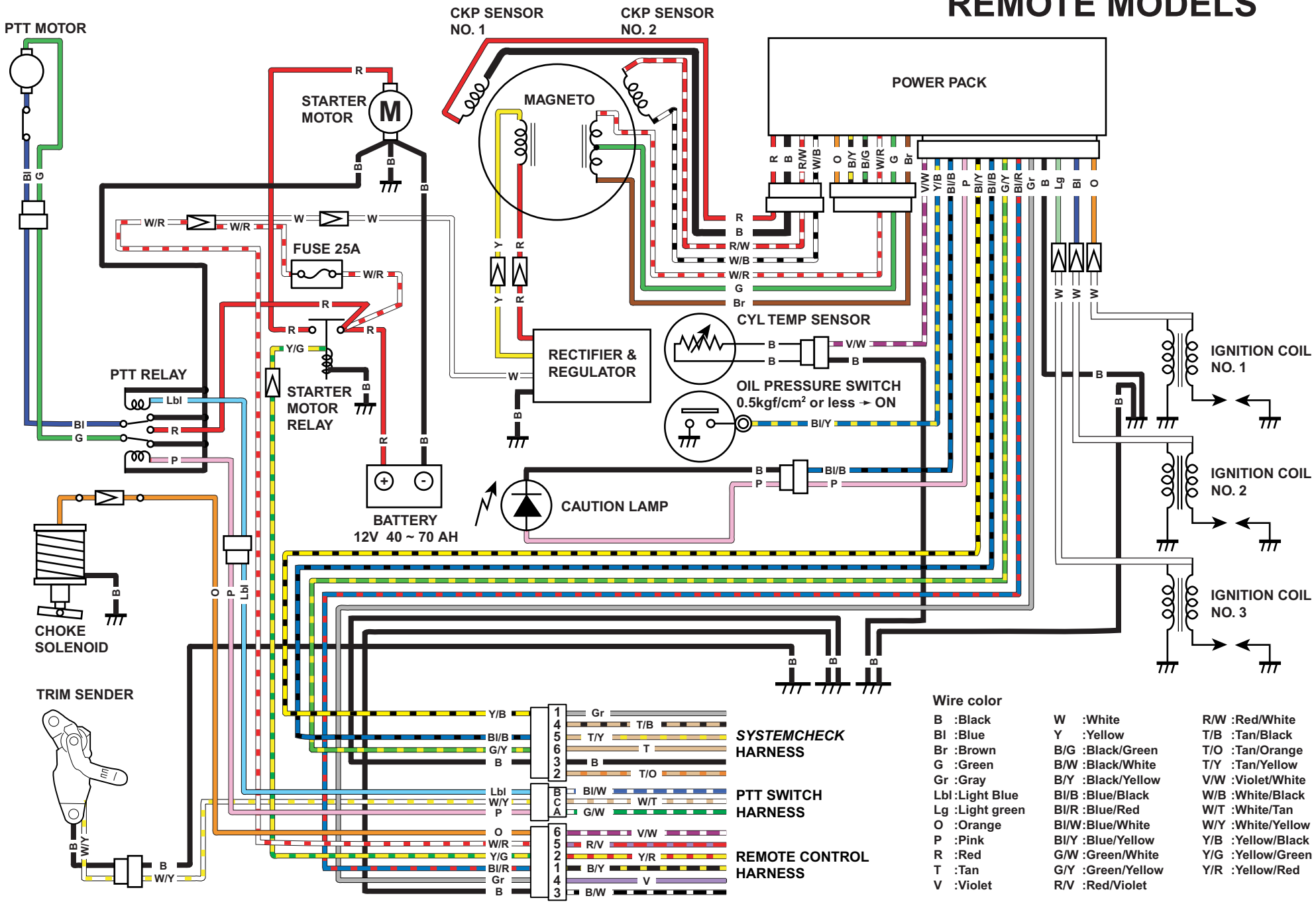

Wire color

B	:Black	W	:White	R/W	:Red/White
Bl	:Blue	Y	:Yellow	T/B	:Tan/Black
Br	:Brown	B/G	:Black/Green	T/O	:Tan/Orange
G	:Green	B/W	:Black/White	T/Y	:Tan/Yellow
Gr	:Gray	B/Y	:Black/Yellow	V/W	:Violet/White
Lbl	:Light Blue	Bl/B	:Blue/Black	W/B	:White/Black
Lg	:Light green	Bl/R	:Blue/Red	W/T	:White/Tan
O	:Orange	Bl/W	:Blue/White	W/Y	:White/Yellow
P	:Pink	Bl/Y	:Blue/Yellow	Y/B	:Yellow/Black
R	:Red	G/W	:Green/White	Y/G	:Yellow/Green
T	:Tan	G/Y	:Green/Yellow	Y/R	:Yellow/Red
V	:Violet	R/V	:Red/Violet		

30 HP 4-STROKE
TEL MODELS

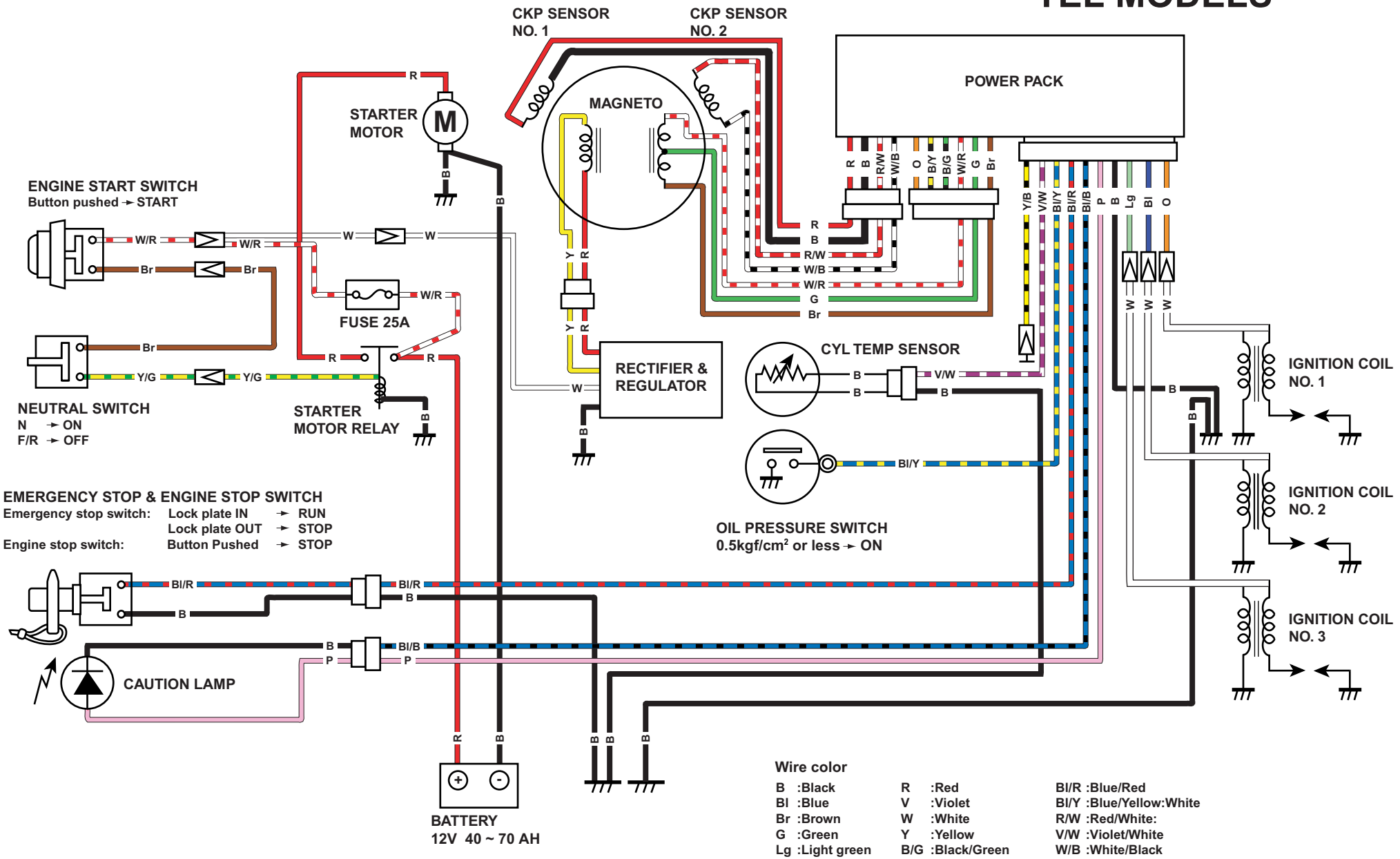

Wire color

B	:Black	R	:Red	Bl/R	:Blue/Red
Bl	:Blue	V	:Violet	Bl/Y	:Blue/Yellow:White
Br	:Brown	W	:White	R/W	:Red/White:
G	:Green	Y	:Yellow	V/W	:Violet/White
Lg	:Light green	B/G	:Black/Green	W/B	:White/Black
O	:Orange	B/Y	:Black/Yellow	Y/B	:Yellow/Black
P	:Pink	Bl/B	:Blue/Black	Y/G	:Yellow/Green

EVINRUDE®
Johnson®
BRP
GENUINE PARTS

5007225