YAMAHA

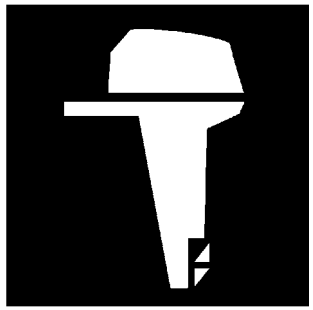

PARTS CATALOGUE

RIGGING PARTS-2007

1F69J-110E1

( )

YAMAHA GENUINE Parts & Accessories

RIGGING PARTS
PARTS CATALOGUE
©2006 by Yamaha Motor Co., Ltd.
1st edition, December 2006
All rights reserved.
Any reprinting or unauthorized use
without the written permission of
Yamaha Motor Co., Ltd.
is expressly prohibited.
Printed in Japan.

FOREWORD

This Parts Catalogue is related to the parts for the model(s) on the cover page. When you are ordering replacement parts, please refer to this Parts Catalogue and quote both part numbers and part names correctly.

1. Modifications or additions which have been made after the issue of the Parts Catalogue will be announced in the Parts News.
   It is advisable that you make the necessary corrections to the Parts Catalogue according to the Parts News.

2. Abbreviations
   The following abbreviations are used in this Parts Catalogue.

   “UR” Use specified parts number.
   “UN” Use as many as needed.
   “AP” Alternate Parts
   “LM” Locally Made (Parts need to be ordered locally)
   “F#” Frame No. (Applicable machine No.)
   “O/S” Over Size

3. The number of components for assembly
   - Parts, which are to be supplied in an assembly, are listed with a dot (.) in front of the part name as shown below.
   - The numeral appearing to the right of each component part indicates the quantity of parts for each assembly unit.

PART NO.	DESCRIPTION	Q’TY	REMARKS
2F5–83310–60	FRONT FLASHER LIGHT ASSY	2	
115–83311–60	.BULB (6V–18W)	1	

4. Applicable colours of graphics are represented in the “REMARKS” as shown below.

PART NO.	DESCRIPTION	Q’TY	REMARKS
2N4–24110–00–X5	FUEL TANK COMP.	2	MXR
3J1–24240–10	.GRAPHIC, FUEL TANK	1	FOR MXR

5. Note that the illustrations for reference in finding parts numbers are not to be used for assembling. When assembling, please use the applicable service manual.

6. The asterisk (*) before a reference number indicates modified items after the first edition.

CONTENTS

CONTROL STANDARD SIDE 703 PUSH 1
CONTROL BINNACLE STANDARD SINGLE 4
CONTROL BINNACLE PREMIUM SINGLE 7
CONTROL BINNACLE PREMIUM DUAL 10
CONTROL SIDE FLUSH PREMIUM 13
CONTROL FLUSH STANDARD 16
CONTROL 701 MANUAL PULL 19
CONTROL 701 MANUAL PUSH 21
CONTROL 6X5 TRIPLE 23
TILLER HANDLE BASE ASSEMBLY 27
TILLER HANDLE ELECTRICAL 30
TILLER HANDLE FITTING KIT F115 31
TILLER HANDLE FITTING KIT F75 F90 32
TILLER HANDLE STEERING FRICTION F75 F90 F115. 33
TILLER HANDLE FITTING KIT F/T50 F/T60 34
TILLER HANDLE STEERING FRICTION F/T50 F/T60 ... 35
TILLER HANDLE FITTING KIT F40 36
TILLER HANDLE STEERING FRICTION F40 37
TILLER HANDLE FITTING KIT 90 38
TILLER HANDLE FITTING KIT 70 39
TILLER HANDLE STEERING FRICTION 70 90 40
TILLER HANDLE FITTING KIT 50 41
TILLER HANDLE STEERING FRICTION 50 42
TILLER HANDLE F25 COMPLETE 1 43
TILLER HANDLE F25 COMPLETE 2 46
TILLER HANDLE F25 COMPLETE 3 47
COMMAND LINK INSTRUMENTS 48
COMMAND LINK ELECTRICAL 1 49
COMMAND LINK ALTERNATE SENSORS 1 51
COMMAND LINK ALTERNATE SENSORS 2 52
COMMAND LINK ALTERNATE SENSORS 3 53
COMMAND LINK ALTERNATE SENSORS 4 54
INSTRUMENTS DIGITAL 55
INSTRUMENTS ANALOGUE 56
ELECTRICAL SWITCH PANEL SINGLE 59
ELECTRICAL SWITCH PANEL INDIVIDUAL 60
ELECTRICAL SWITCH PANEL TWIN 62
ELECTRICAL SWITCH PANEL TRIPLE 63
ELECTRICAL WIRE HARNESSES 64
PROPELLERS F2.5 THROUGH F20 66
PROPELLERS F25 AND 25 68
PROPELLERS T25 THROUGH 50 69
PROPELLERS T50 THROUGH (L)F115 70
PROPELLERS (V)150 THROUGH (V)Z300 72
PROPELLERS SPECIAL 75

INDEX

NUMERICAL INDEX 76

Control Box Application Chart

Complete Model Code	Side Mount W/Key Sw.	Flush Mount	Binnacle	Dual Binnacle	Triple Binnacle	Manual Side Control - PULL	Manual Side Control - PUSH
	703-48207-17	**6X3-48206-01** **6X0-48206-12**	**704-48205-B1** **704-48205-P1**	**704-48207-P1**	**6X5-48207-01**	**701-48101-51**	**701-48130-02**
F2.5MSH							
F4MSH							
F4MLH							
F6MSH							X
F6MLH							X
F8MSH							X
F8MLH							X
T8ELH							
T8EXH							
T8PLH							
T8PXH							
T8PLR	X	X	X				
T8PXR	X	X	X				
F9.9MSH							X
F9.9MLH							X
F9.9ELR	X	X	X				
F9.9MSH2							X
F9.9MLH2							X
F9.9ELR2	X	X	X				
T9.9ELH							
T9.9EXH							
T9.9ELR	X	X	X				
T9.9ELH2							
T9.9EXH2							
T9.9ELR2	X	X	X				
F15MSH							X
F15MLH							X
F15ESH							
F15ELH							
F15PLH							
F15PLR	X	X	X				

X : Required for engine operation

Control Box Application Chart

Complete Model Code	Side Mount W/Key Sw.	Flush Mount	Binnacle	Dual Binnacle	Triple Binnacle	Manual Side Control - PULL	Manual Side Control - PUSH
	703-48207-17	**6X3-48206-01** **6X0-48206-12**	**704-48205-B1** **704-48205-P1**	**704-48207-P1**	**6X5-48207-01**	**701-48101-51**	**701-48130-02**
F15CMSH							X
F15CMLH							X
F15CESH							
F15CELH							
F15CPLH							
F20MSH							X
F20MLH							X
F20ESR	X	X	X				
F20ELR	X	X	X				
F20ESH							
F20ELH							
F20PLH							
F20PLR	X	X	X				
F25ESH							
F25ELH							
F25TLR	X	X	X				
T25TLR	X	X	X				
F40MSH							X
F40MLH							X
F40MJH							X
F40TLR	X	X	X				
F40EJR	X	X	X				
F50TLR	X	X	X				
T50TLR	X	X	X				
F60TLR	X	X	X				
F60TJR	X	X	X				
T60TLR	X	X	X				
F75TLR	X	X	X				
F90TLR	X	X	X				
F90TXR	X	X	X				
F90TJR	X	X	X				

X : Required for engine operation

Control Box Application Chart

Complete Model Code	Side Mount W/Key Sw.	Flush Mount	Binnacle	Dual Binnacle	Triple Binnacle	Manual Side Control - PULL	Manual Side Control - PUSH
	703-48207-17	**6X3-48206-01** **6X0-48206-12**	**704-48205-B1** **704-48205-P1**	**704-48207-P1**	**6X5-48207-01**	**701-48101-51**	**701-48130-02**
F115TLR	X	X	X		X		
F115TXR	X	X	X		X		
F115TJR	X	X	X		X		
LF115TXR				X	X		
F150TLR	X	X	X		X		
F150TXR	X	X	X		X		
LF150TXR				X	X		
F200TXR	X	X	X		X		
LF200TXR				X	X		
F225TXR	X	X	X		X		
LF225TXR				X	X		
F250TXR	X	X	X		X		
F250TUR	X	X	X		X		
LF250TXR				X	X		
LF250TUR				X	X		
8MSH						X	
9.9MSH							X
15MSH							X
25MSH						X	
25MLH						X	
25ESH							
25ELH							
25ESR	**703-48230-15**						
25ELR	**703-48230-15**						
50TLR	X	X	X				
70TLR	X	X	X				
90TLR	X	X	X				
115TLR	X	X	X		X		
150TXR	X	X	X		X		
V150TLR	X	X	X		X		
VZ150TLR	X	X	X		X		

X : Required for engine operation

Control Box Application Chart

Complete Model Code	Side Mount W/Key Sw.	Flush Mount	Binnacle	Dual Binnacle	Triple Binnacle	Manual Side Control - PULL	Manual Side Control - PUSH
	703-48207-17	**6X3-48206-01** **6X0-48206-12**	**704-48205-B1** **704-48205-P1**	**704-48207-P1**	**6X5-48207-01**	**701-48101-51**	**701-48130-02**
VZ175TLR	X	X	X		X		
VZ200TLR	X	X	X		X		
Z200TXR	X	X	X		X		
LZ200TXR				X	X		
VZ225TLR	X	X	X		X		
VZ250TLR	X	X	X		X		
VZ300TLR	X	X	X		X		
Z300TXR	X	X	X		X		
Z300TUR	X	X	X		X		
LZ300TXR				X	X		
LZ300TUR				X	X		

X : Required for engine operation

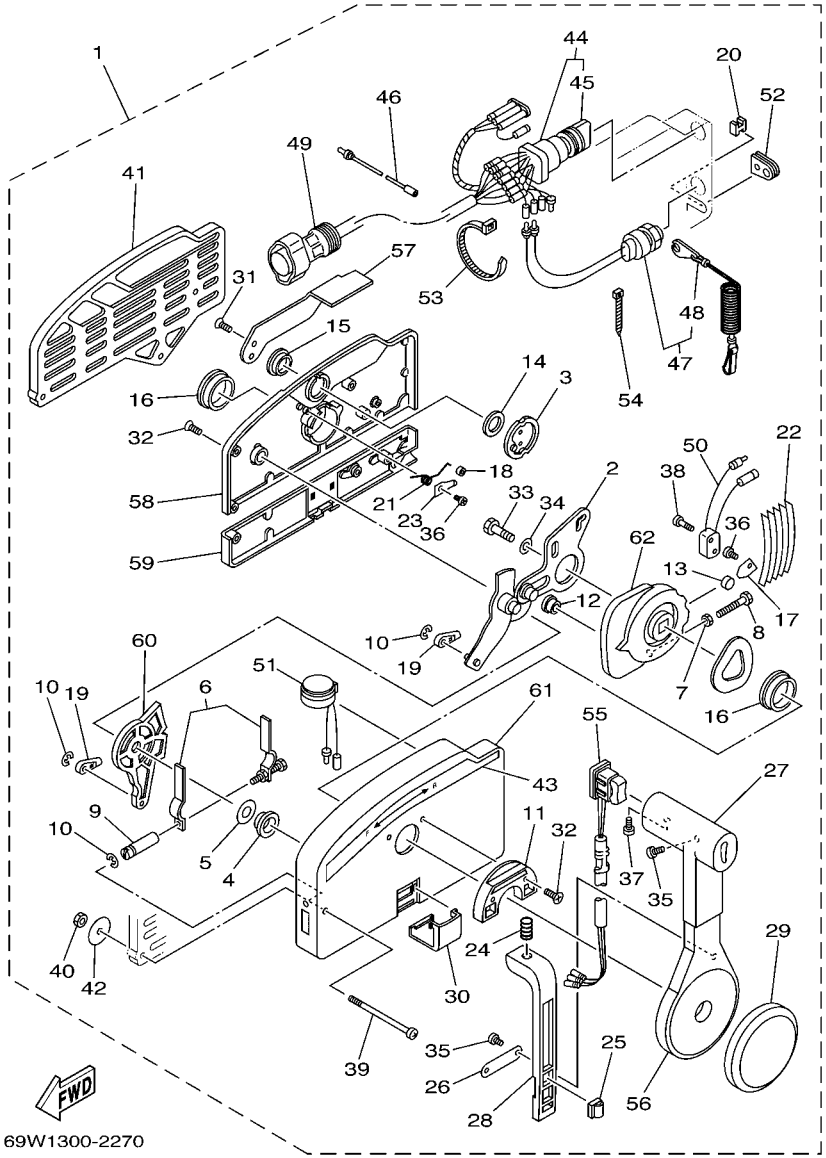

69W1300-2270

FIG. 1 CONTROL STANDARD SIDE 703 PUSH

REF. NO.	PART NO.	DESCRIPTION	USA					REMARKS
1	703–48207–17	REMOTE CONTROL ASSY (10P)	1					WITH PT/T SW.
2	703–48261–01	.ARM, THROTTLE	1					
3	703–48153–00	.SHAFT, FREE ACCEL.	1					
4	703–48235–00	.BUSHING	1					
5	703–48268–00	.SPACER	1					
6	703–48264–00	.FRICTION, THROTTLE	1					
7	95380–05600	.NUT	1					
8	97380–05025	.BOLT	1					
9	703–48265–00	.SHAFT, FRICTION	1					
10	93430–06024	.CIRCLIP	3					
11	703–48245–00	.PLATE, LOCK	1					
12	703–48252–00	.ROLLER, CAM	1					
13	701–48248–00	.ROLLER, FREE ACCEL.	1					
14	703–48198–00	.WASHER, WAVE	1					
15	703–48243–00	.BUSHING	1					
16	703–48236–00	.BUSHING 1	2					
17	703–48189–00	.RETAINER	1					
18	703–48234–00	.ROLLER, DETENT	1					
19	703–48345–01	.CABLE END, REMOTE CONTROL 2	2					
20	703–48358–00	.ANCHOR, CABLE	1					
21	703–48244–00	.SPRING, FREE ACCEL.	1					
22	703–48238–00	.SPRING, DETENT	5					
23	703–48246–00	.SPACER	1					
24	703–48227–00	.SPRING, NEUTRAL LOCK	1					
25	703–82594–00	.CLAMP	1					WITH PT/T SW.
26	703–48226–00	.PLATE, STOPPER	1					
27	703–48222–00	.GRIP, CONTROL LEVER	1					SINGLE

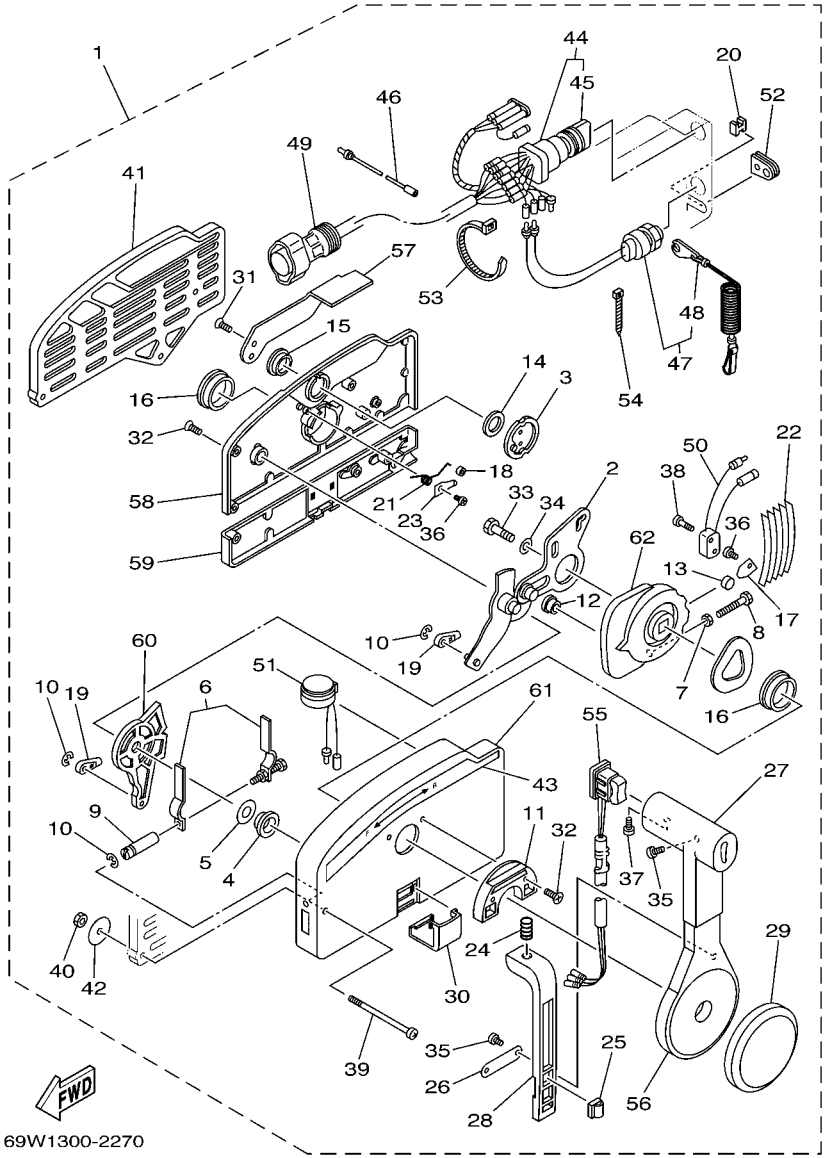

FIG. 1 CONTROL STANDARD SIDE 703 PUSH

REF. NO.	PART NO.	DESCRIPTION	USA					REMARKS
28	703–48223–00	.LOCK, NEUTRAL	1					
29	703–48225–00	.COVER	1					
30	703–48219–00	.COVER, LEAD	1					
31	703–48281–00	.SCREW	2					
32	703–48282–00	.SCREW	7					
33	97380–08030	.BOLT	1					
34	92990–08600	.WASHER, PLATE	1					
35	98580–04010	.SCREW, PAN HEAD	3					
36	98580–04006	.SCREW, PAN HEAD	2					
37	98580–05010	.SCREW, PAN HEAD	1					
38	98580–03015	.SCREW, PAN HEAD	2					
39	703–48291–10	.SCREW (M6)	3					
40	95380–06600	.NUT, HEXAGON	3					
41	703–48293–10	.SPACER, REMOTE CONTROL	1					SINGLE
42	701–48287–00	.WASHER	3					
43	703–48215–00	.GRAPHIC	1					
44	703–82510–43	.MAIN SWITCH ASSY	1					
45	703–82577–00	..CAP, KEY	1					
46	703–82531–00	.WIRE, LEAD (L70)	1					
47	688–82575–01	.ENGINE STOP SWITCH ASSY	1					
48	682–82556–00	..LANYARD, STOP SWITCH	1					
49	688–8258A–20	.EXTENSION, WIRE HARNESS (4.9M	1					(10P)
50	703–82540–00	.NEUTRAL SWITCH ASSY	1					
51	703–83383–02	.BUZZER	1					
52	703–48284–10	.GROMMET	1					
53	703–82591–00	.BAND	3					
54	703–82592–00	.BAND	1					

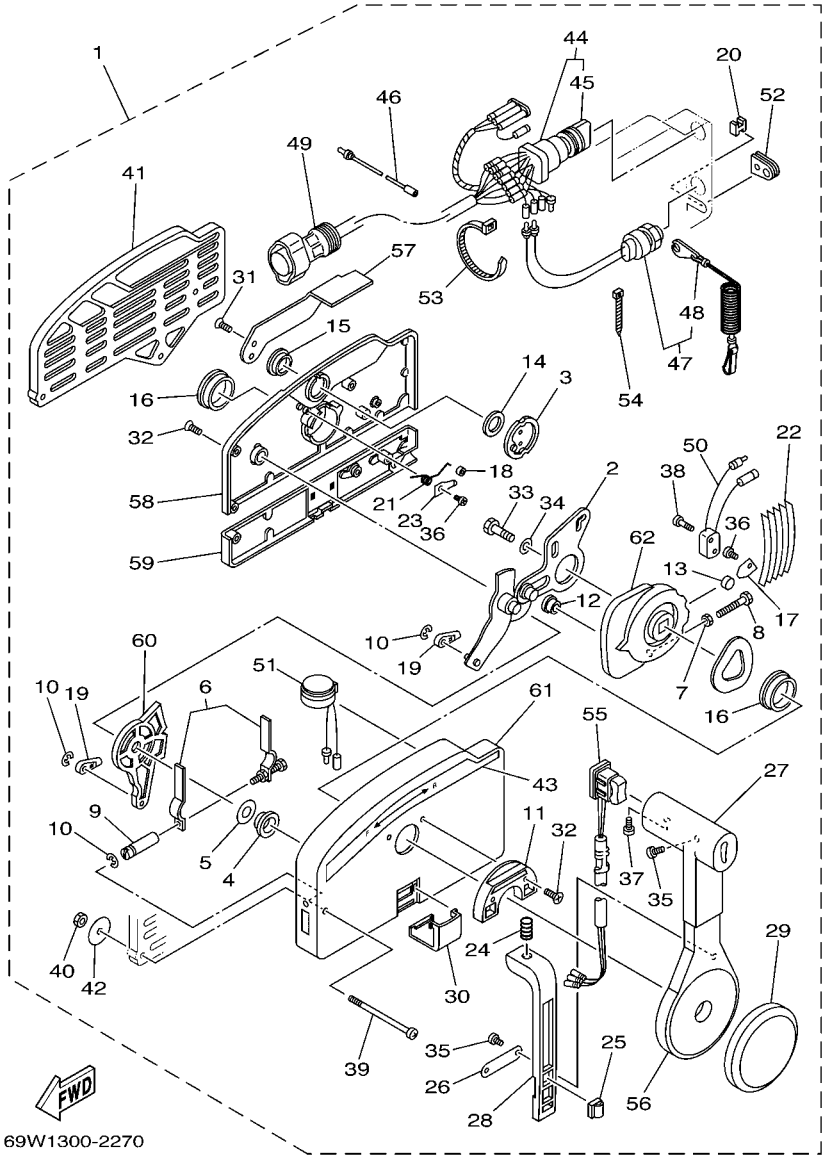

69W1300-2270

FIG. 1 CONTROL STANDARD SIDE 703 PUSH

REF. NO.	PART NO.	DESCRIPTION	USA					REMARKS
55	703–82563–12	.TRIM & TILT SWITCH ASSY	1					WITH PT/T SW.
56	703–48221–00	.LEVER, CONTROL	1					
57	703–48152–00	.KNOB, FREE ACCEL.	1					
58	703–48212–00	.BACK PLATE 1	1					
59	703–48213–00	.BACK PLATE 2	1					
60	703–48271–00	.ARM, SHIFT	1					
61	703–48211–01	.HOUSING,1	1					
62	703–48232–00	.GEAR	1					

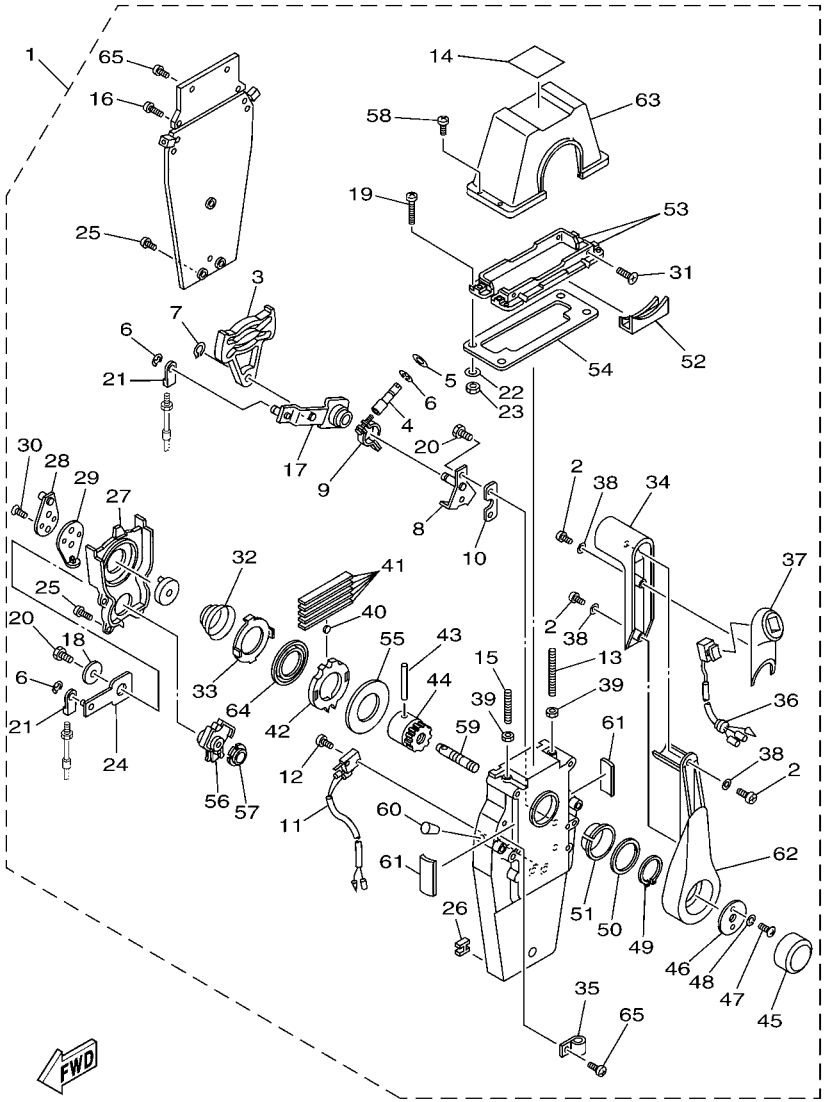

6X31100-C030

FIG. 2 CONTROL BINNACLE STANDARD SINGLE

REF. NO.	PART NO.	DESCRIPTION	USA					REMARKS
1	704–48205–B1	REMOTE CONTROL ASSY	1					WITH PT/T SW.
2	704–48128–00	.SCREW 2	3					
3	EL8–48251–00	.PLATE, CAM	1					
4	704–48265–00	.SHAFT, FRICTION	1					
5	701–48246–00	.SPACER	1					
6	93430–06024	.CIRCLIP	4					
7	EL8–48259–00	.CIRCLIP 1	1					
8	704–48262–00	.SHAFT, THROTTLE	1					
9	704–48264–00	.THROTTLE, FRICTION	1					
10	704–48266–00	.SPACER	1					
11	704–82540–20	.NEUTRAL SWITCH ASSY	1					
12	6A5–48129–10	.SCREW 3	2					
13	EL8–48281–00	.SCREW	1					
14	704–48215–00	.GRAPHIC	1					
15	704–48281–00	.SCREW	1					
16	97890–05025	.SCREW, PAN HEAD	2					
17	704–48261–00	.ARM, THROTTLE	1					
18	EL8–48191–00	.WASHER 1	1					
19	704–48283–00	.SCREW	4					
20	97380–06018	.BOLT	3					
21	703–48345–01	.CABLE END, REMOTE CONTROL 2	2					
22	704–48287–00	.WASHER	4					
23	95380–05600	.NUT	4					
24	EL8–48271–10	.ARM, SHIFT	1					
25	EL8–48127–00	.SCREW 1	9					
26	703–48358–00	.ANCHOR, CABLE	1					
27	EL8–48231–00	.HOUSING, GEAR	1					

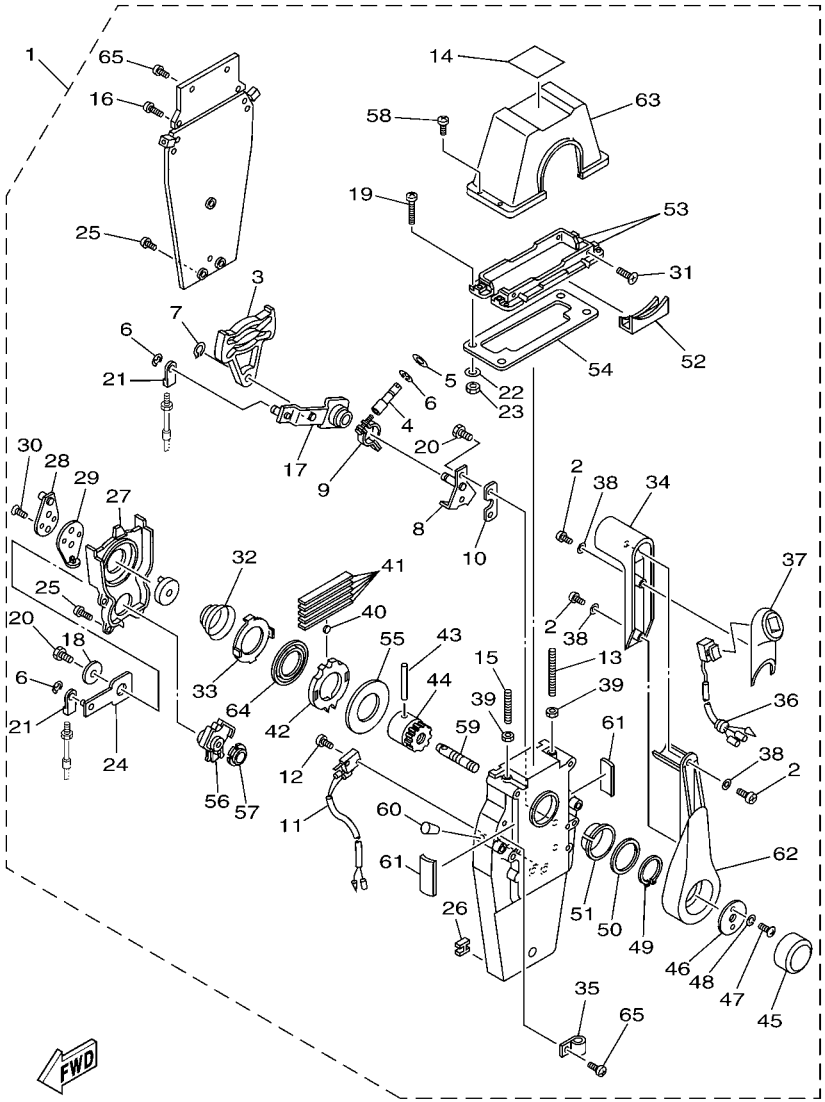

FIG. 2 CONTROL BINNACLE STANDARD SINGLE

REF. NO.	PART NO.	DESCRIPTION	USA					REMARKS
28	EL8–48241–10	.ARM, DRIVE	1					
29	EL8–48254–10	.STOPPER, THROTTLE ADJUST	1					
30	92780–06020	.SCREW, FLAT HEAD	2					
31	98780–05018	.SCREW, FLAT HEAD	4					
32	EL8–48244–00	.SPRING, FREE ACCEL.	1					
33	EL8–48245–00	.PLATE, LOCK	1					
34	704–48222–B0	.GRIP, CONTROL LEVER	1					
35	704–82594–00	.CLAMP	1					
36	704–82563–41	.TRIM & TILT SWITCH ASSY	1					
37	704–48229–B1	.GRIP, CONTROL LEVER	1					
38	92990–05300	.WASHER, INTERNAL TOOTH	3					
39	95380–06600	.NUT, HEXAGON	2					
40	701–48248–00	.ROLLER, FREE ACCEL.	1					
41	704–48238–00	.SPRING, DETENT	5					
42	EL8–48232–00	.GEAR 1	1					
43	EL8–48164–00	.PIN 2	1					
44	704–48242–00	.SHAFT, DRIVE	1					
45	6X3–48225–20	.COVER	1					
46	704–48192–00	.WASHER 2	1					
47	97890–06018	.SCREW, PAN HEAD	2					
48	92990–06300	.WASHER, INTERNAL TOOTH	2					
49	EL8–48279–00	.CIRCLIP 2	1					
50	704–48193–00	.WASHER 3	1					
51	EL8–48234–00	.BUSHING 1	1					
52	704–48219–B0	.COVER, LEAD	1					
53	704–48144–00	.PLATE, STOPPER 2	2					
54	704–48176–00	.GROMMET	1					

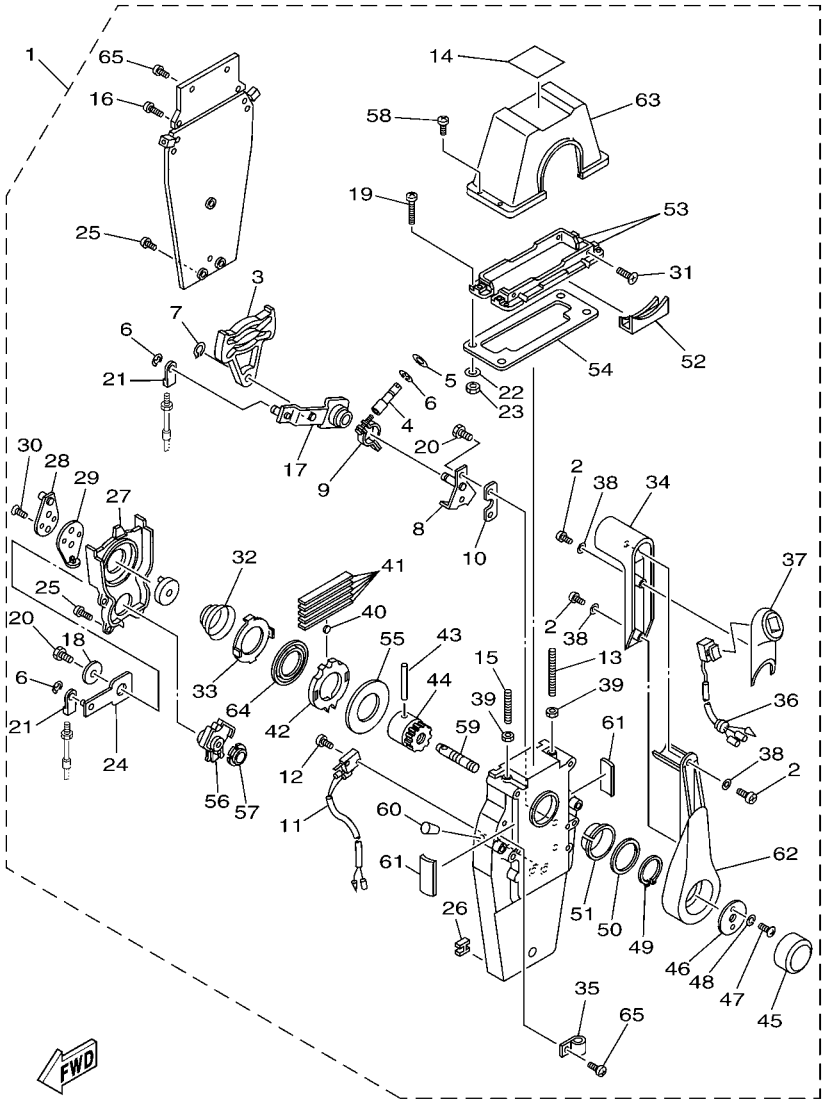

FIG. 2 CONTROL BINNACLE STANDARD SINGLE

REF. NO.	PART NO.	DESCRIPTION	USA					REMARKS
55	703–48192–00	.WASHER 2	1					
56	EL8–48233–00	.GEAR 2	1					
57	702–48235–00	.BUSHING	1					
58	704–48282–00	.SCREW	4					
59	704–48153–00	.SHAFT, FREE ACCEL.	1					
60	704–48166–00	.PLUG	1					
61	704–48284–00	.GROMMET	2					
62	704–48221–B0	.LEVER, CONTROL	1					
63	704–48119–B0	.COVER	1					
64	704–48178–10	.PLATE, SHIFT	1					
65	97890–05016	.SCREW, PAN HEAD	3					

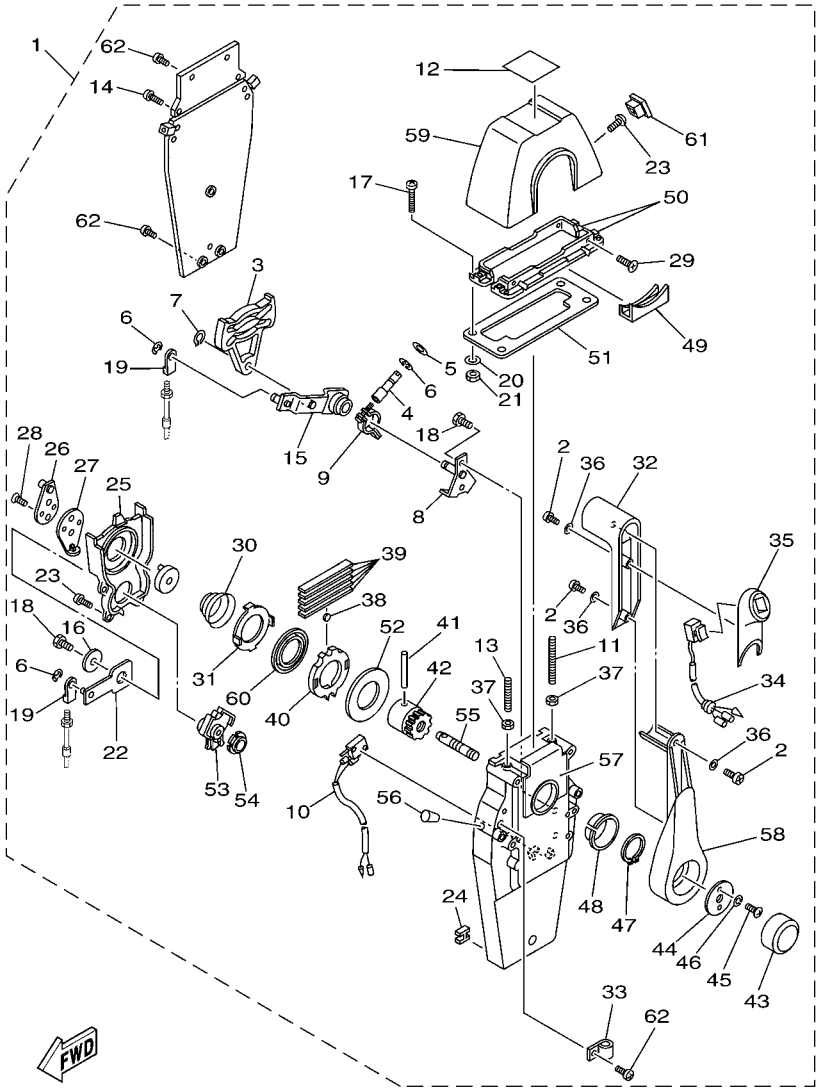

6C23100-F340

FIG. 3 CONTROL BINNACLE PREMIUM SINGLE

REF. NO.	PART NO.	DESCRIPTION	USA					REMARKS
1	704–48205–P1	REMOTE CONTROL ASSY (RIGHT)	1					WITH PT/T SW.
2	704–48128–00	.SCREW 2	3					
3	EL8–48251–00	.PLATE, CAM	1					
4	704–48265–00	.SHAFT, FRICTION	1					
5	701–48246–00	.SPACER	1					
6	93430–06024	.CIRCLIP	4					
7	EL8–48259–00	.CIRCLIP 1	1					
8	704–48262–00	.SHAFT, THROTTLE	1					
9	704–48264–00	.THROTTLE, FRICTION	1					
10	704–82540–20	.NEUTRAL SWITCH ASSY	1					
11	EL8–48281–00	.SCREW	1					
12	704–48215–20	.GRAPHIC	1					
13	704–48281–00	.SCREW	1					
14	97890–05025	.SCREW, PAN HEAD	2					
15	704–48261–00	.ARM, THROTTLE	1					
16	EL8–48191–00	.WASHER 1	1					
17	704–48283–00	.SCREW	4					
18	97380–06018	.BOLT	3					
19	703–48345–01	.CABLE END, REMOTE CONTROL 2	2					
20	704–48287–00	.WASHER	4					
21	95380–05600	.NUT	4					
22	704–48271–00	.ARM, SHIFT	1					
23	EL8–48127–00	.SCREW 1	10					
24	703–48358–00	.ANCHOR, CABLE	1					
25	704–48231–00	.HOUSING, GEAR	1					
26	EL8–48241–00	.ARM, DRIVE	1					
27	EL8–48254–00	.STOPPER, THROTTLE ADJUSTING	1					

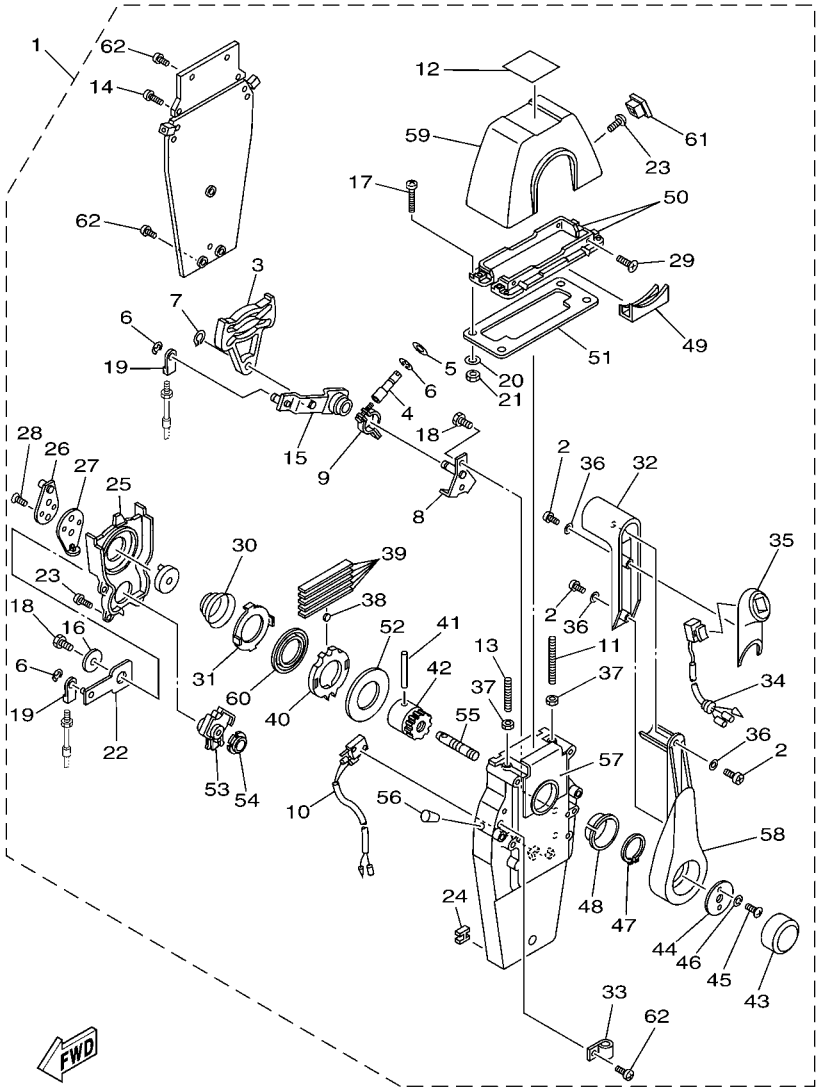

6C23100-F340

FIG. 3 CONTROL BINNACLE PREMIUM SINGLE

REF. NO.	PART NO.	DESCRIPTION	USA					REMARKS
28	92780–06020	.SCREW, FLAT HEAD	2					
29	98780–05018	.SCREW, FLAT HEAD	4					
30	EL8–48244–00	.SPRING, FREE ACCEL.	1					
31	EL8–48245–00	.PLATE, LOCK	1					
32	704–48222–P0	.GRIP, CONTROL LEVER	1					
33	704–82594–00	.CLAMP	1					
34	704–82563–41	.TRIM & TILT SWITCH ASSY	1					
35	704–48229–P1	.GRIP, CONTROL LEVER	1					
36	92990–05300	.WASHER, INTERNAL TOOTH	3					
37	95380–06600	.NUT, HEXAGON	2					
38	701–48248–00	.ROLLER, FREE ACCEL.	1					
39	704–48238–00	.SPRING, DETENT	5					
40	704–48232–P1	.GEAR	1					
41	EL8–48164–00	.PIN 2	1					
42	704–48242–10	.SHAFT, DRIVE	1					
43	6X3–48225–20	.COVER	1					
44	704–48192–00	.WASHER 2	1					
45	97890–06018	.SCREW, PAN HEAD	2					
46	92990–06300	.WASHER, INTERNAL TOOTH	2					
47	EL8–48279–00	.CIRCLIP 2	1					
48	704–48234–00	.BUSHING 1	1					
49	704–48219–P0	.COVER, LEAD	1					
50	704–48144–10	.PLATE, STOPPER 2	2					
51	704–48176–00	.GROMMET	1					
52	704–48192–P0	.WASHER 2	1					
53	704–48233–00	.GEAR 2	1					
54	704–48235–00	.BUSHING	1					

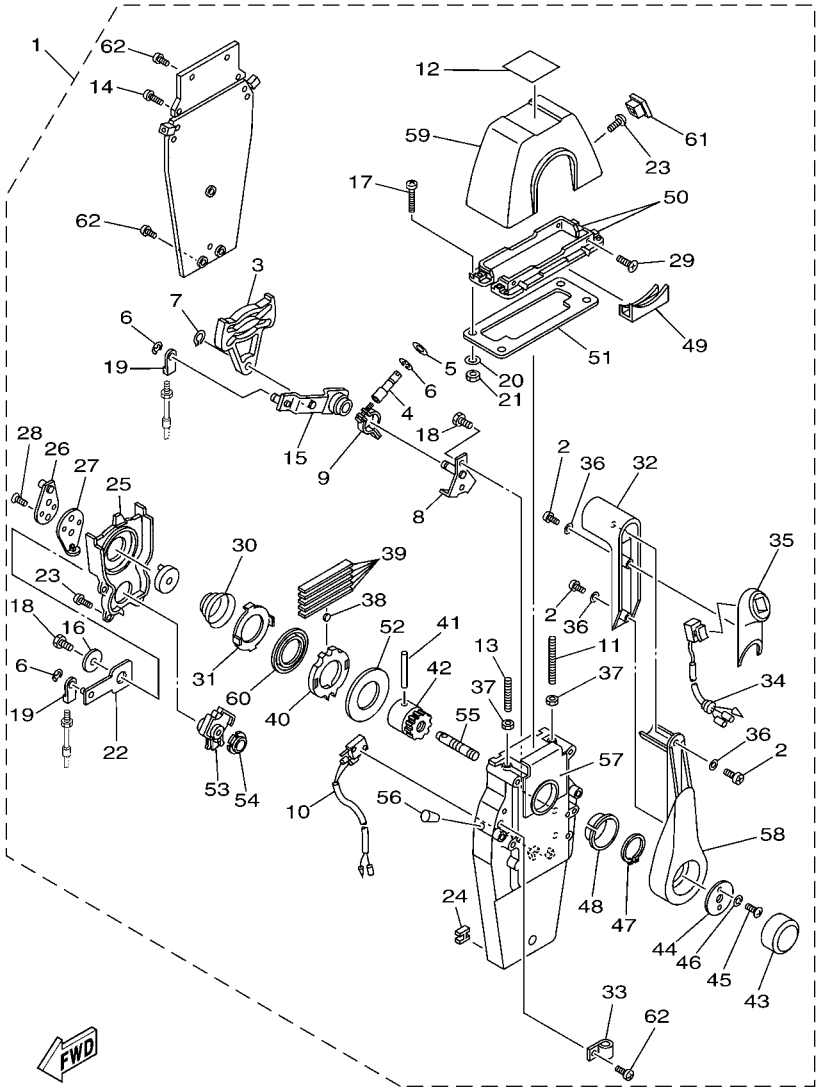

6C23100-F340

FIG. 3 CONTROL BINNACLE PREMIUM SINGLE

REF. NO.	PART NO.	DESCRIPTION	USA					REMARKS
55	704–48153–00	.SHAFT, FREE ACCEL.	1					
56	704–48166–00	.PLUG	1					
57	704–48284–P0	.GROMMET	1					
58	704–48221–P0	.LEVER, CONTROL	1					
59	704–48119–31	.COVER	1					
60	704–48178–10	.PLATE, SHIFT	1					
61	704–48167–01	.PLUG	1					
62	97890–05016	.SCREW, PAN HEAD	3					

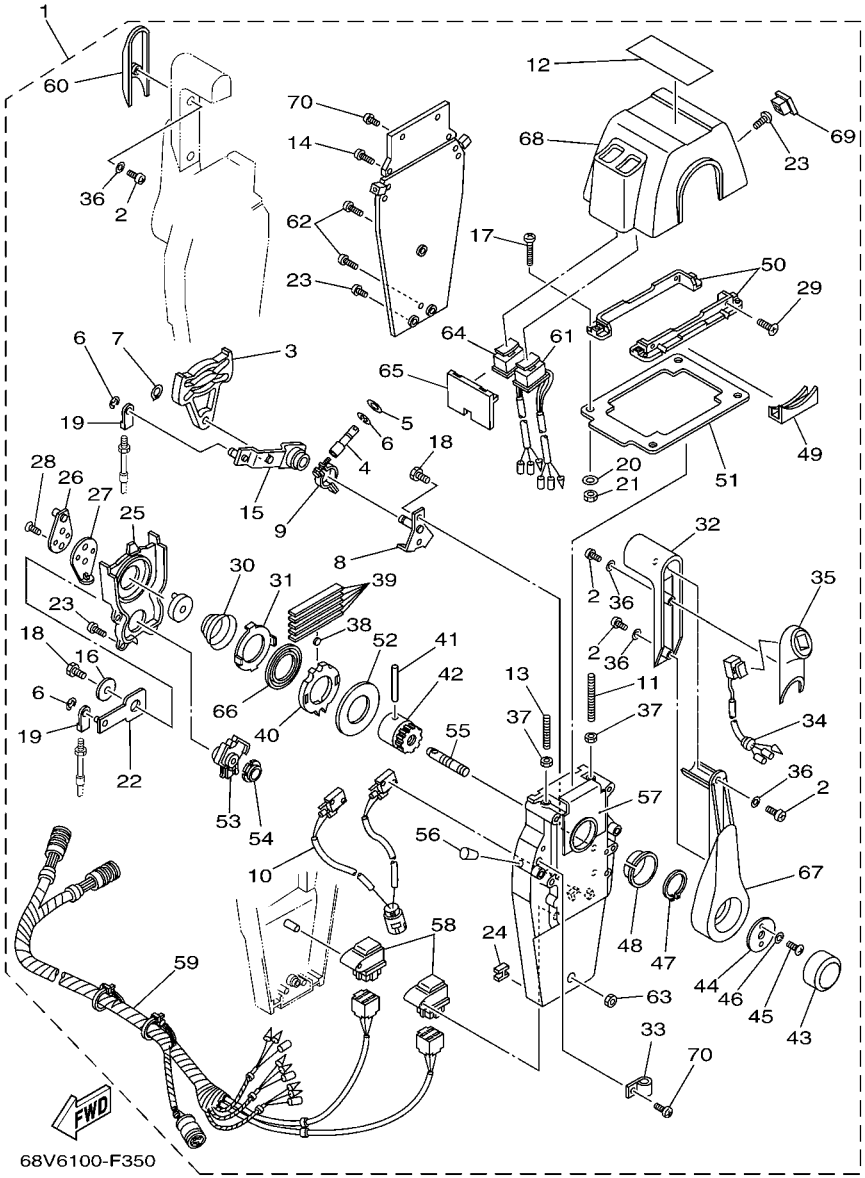

FIG. 4 CONTROL BINNACLE PREMIUM DUAL

REF. NO.	PART NO.	DESCRIPTION	USA					REMARKS
1	704–48207–P1	REMOTE CONTROL ASSY	1					WITH PT/T SW.
2	704–48128–00	.SCREW 2	6					
3	EL8–48251–00	.PLATE, CAM	2					
4	704–48265–00	.SHAFT, FRICTION	2					
5	701–48246–00	.SPACER	2					
6	93430–06024	.CIRCLIP	8					
7	EL8–48259–00	.CIRCLIP 1	2					
8	704–48262–00	.SHAFT, THROTTLE	2					
9	704–48264–00	.THROTTLE, FRICTION	2					
10	704–82540–30	.NEUTRAL SWITCH ASSY	1					
11	EL8–48281–00	.SCREW	2					
12	704–48215–30	.GRAPHIC	1					
13	704–48281–00	.SCREW	2					
14	97890–05025	.SCREW, PAN HEAD	4					
15	704–48261–00	.ARM, THROTTLE	2					
16	EL8–48191–00	.WASHER 1	2					
17	704–48283–00	.SCREW	4					
18	97380–06018	.BOLT	6					
19	703–48345–01	.CABLE END, REMOTE CONTROL 2	4					
20	704–48287–00	.WASHER	4					
21	95380–05600	.NUT	4					
22	704–48271–00	.ARM, SHIFT	2					
23	EL8–48127–00	.SCREW 1	18					
24	703–48358–00	.ANCHOR, CABLE	2					
25	704–48231–00	.HOUSING, GEAR	2					
26	EL8–48241–00	.ARM, DRIVE	2					
27	EL8–48254–00	.STOPPER, THROTTLE ADJUSTING	2					

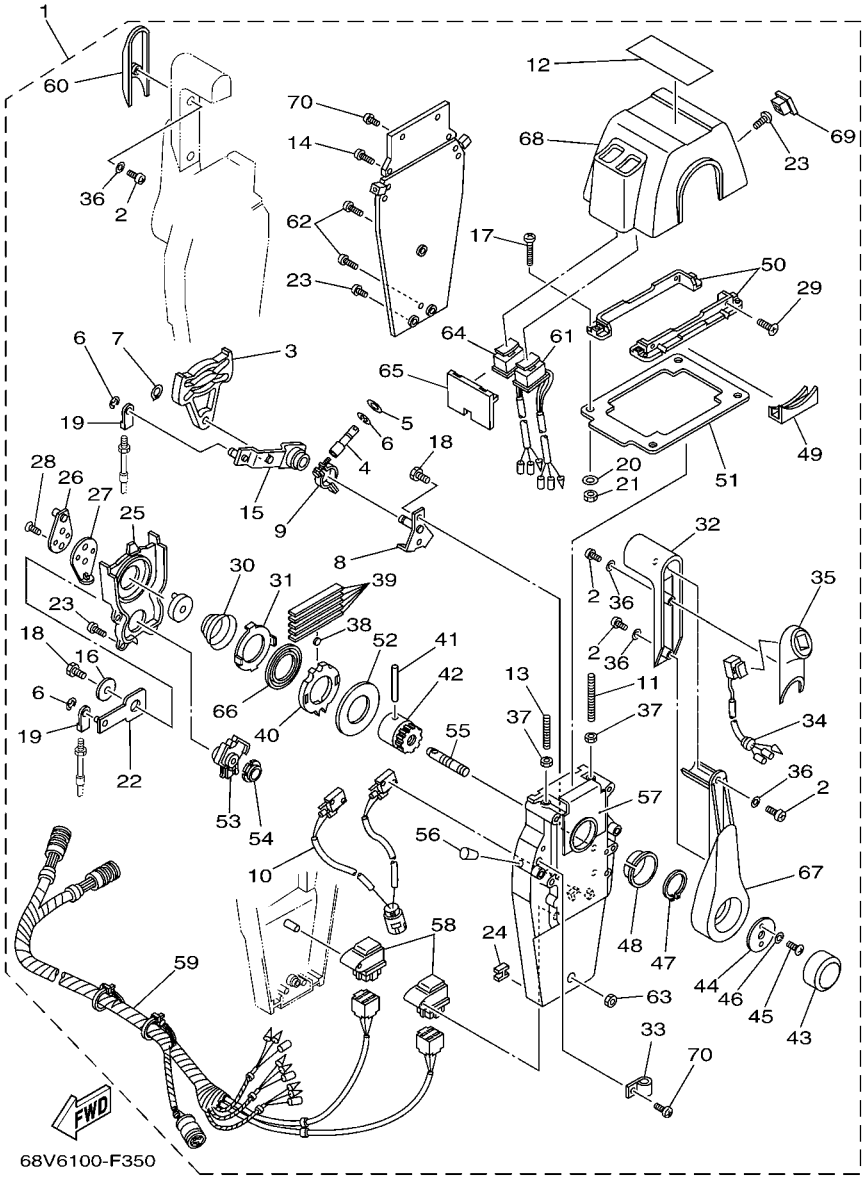

FIG. 4 CONTROL BINNACLE PREMIUM DUAL

REF. NO.	PART NO.	DESCRIPTION	USA					REMARKS
28	92780–06020	.SCREW, FLAT HEAD	4					
29	98780–05018	.SCREW, FLAT HEAD	4					
30	EL8–48244–00	.SPRING, FREE ACCEL.	2					
31	EL8–48245–00	.PLATE, LOCK	2					
32	704–48222–P0	.GRIP, CONTROL LEVER	2					
33	704–82594–00	.CLAMP	1					
34	704–82563–51	.TRIM & TILT SWITCH ASSY	1					
35	704–48229–P1	.GRIP, CONTROL LEVER	1					
36	92990–05300	.WASHER, INTERNAL TOOTH	6					
37	95380–06600	.NUT, HEXAGON	4					
38	701–48248–00	.ROLLER, FREE ACCEL.	2					
39	704–48238–00	.SPRING, DETENT	10					
40	704–48232–P1	.GEAR	2					
41	EL8–48164–00	.PIN 2	2					
42	704–48242–10	.SHAFT, DRIVE	2					
43	6X3–48225–20	.COVER	2					
44	704–48192–00	.WASHER 2	2					
45	97890–06018	.SCREW, PAN HEAD	4					
46	92990–06300	.WASHER, INTERNAL TOOTH	4					
47	EL8–48279–00	.CIRCLIP 2	2					
48	704–48234–00	.BUSHING 1	2					
49	704–48219–P0	.COVER, LEAD	2					
50	704–48144–20	.PLATE, STOPPER 2	2					
51	704–48176–10	.GROMMET	1					
52	704–48192–P0	.WASHER 2	2					
53	704–48233–00	.GEAR 2	2					
54	704–48235–00	.BUSHING	2					

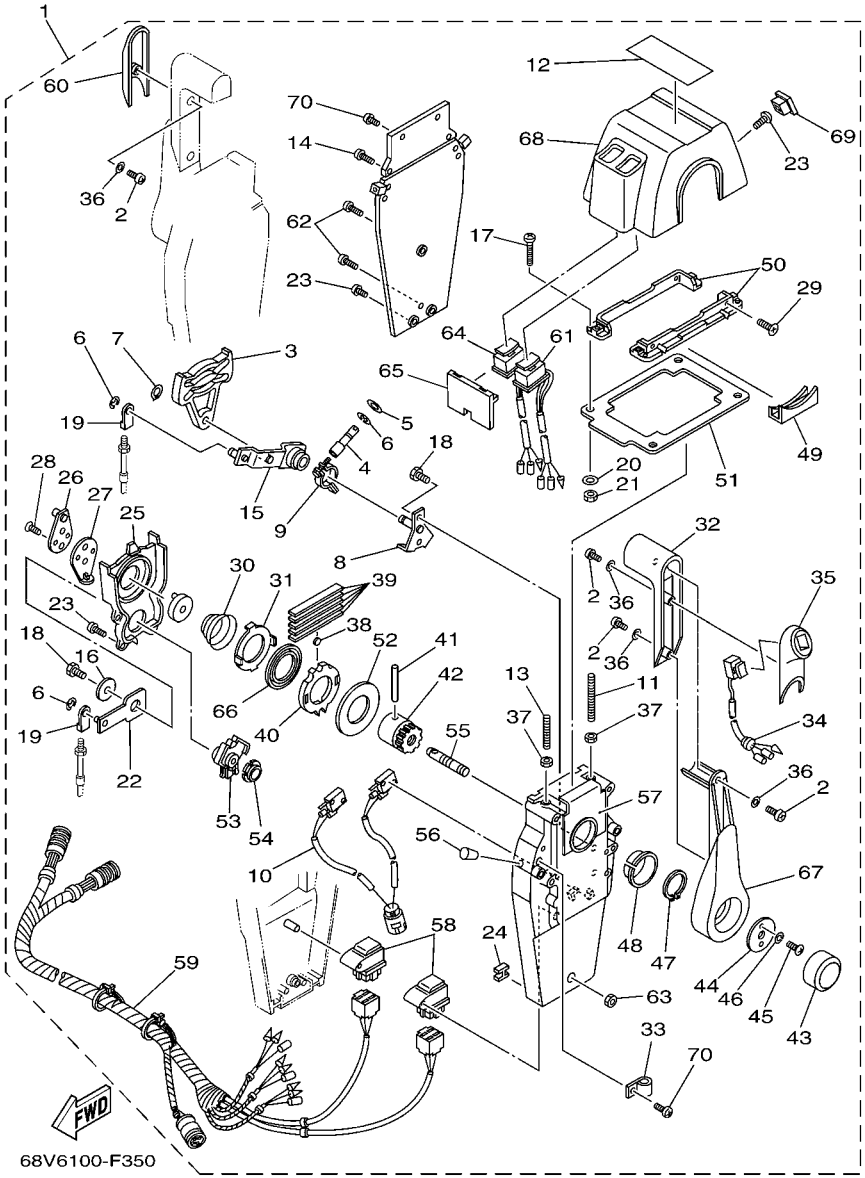

FIG. 4 CONTROL BINNACLE PREMIUM DUAL

REF. NO.	PART NO.	DESCRIPTION	USA					REMARKS
55	704–48153–00	.SHAFT, FREE ACCEL.	2					
56	704–48166–00	.PLUG	2					
57	704–48284–P0	.GROMMET	2					
58	704–81950–10	.RELAY ASSY	2					
59	704–82590–10	.WIRE HARNESS ASSY	1					
60	704–48229–R0	.GRIP, CONTROL LEVER	1					
61	704–82563–H1	.TRIM & TILT SWITCH ASSY	1					
62	704–48128–00	.SCREW 2	3					
63	704–48156–00	.NUT 1	1					
64	704–82563–J1	.TRIM & TILT SWITCH ASSY	1					
65	704–48285–10	.GROMMET 2	1					
66	704–48178–00	.PLATE, SHIFT	2					
67	704–48221–P0	.LEVER, CONTROL	2					
68	704–48119–41	.COVER	1					
69	704–48167–11	.PLUG	1					
70	97890–05016	.SCREW, PAN HEAD	5					

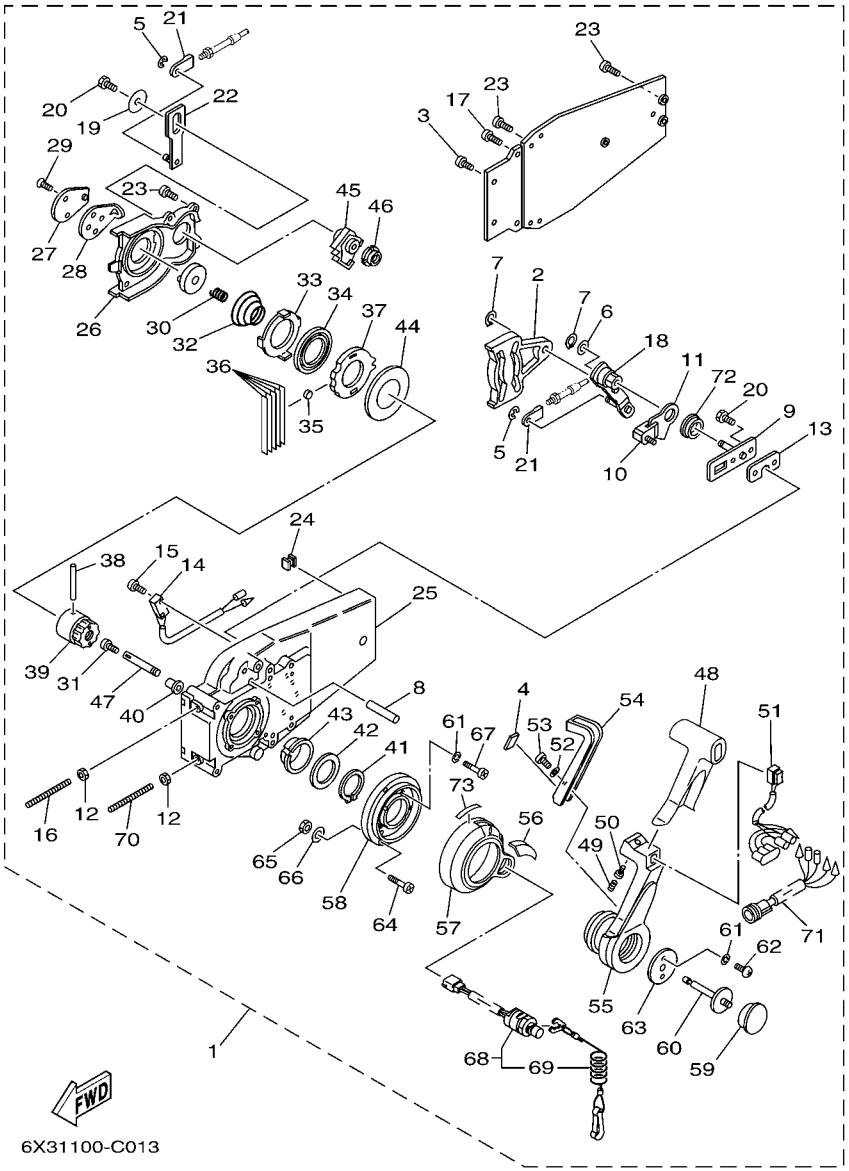

FIG. 5 CONTROL SIDE FLUSH PREMIUM

REF. NO.	PART NO.	DESCRIPTION	USA					REMARKS
1	6X3–48206–01	REMOTE CONTROL ASSY	1					WITH PT/T SW.
2	EL8–48251–00	.PLATE, CAM	1					
3	97890–05016	.SCREW, PAN HEAD	2					
4	6X0–48138–00	.CAP, LOCK ARM	1					
5	93430–06024	.CIRCLIP	3					
6	92990–10600	.WASHER, PLATE	1					
7	EL8–48259–00	.CIRCLIP 1	2					
8	6X0–48265–00	.SHAFT, FRICTION	1					
9	6X0–48262–00	.SHAFT, THROTTLE	1					
10	6X0–48264–00	.THROTTLE, FRICTION	1					
11	6X0–48187–00	.PLATE, ADJUST	1					
12	95380–06600	.NUT, HEXAGON	2					
13	704–48266–00	.SPACER	1					
14	704–82540–00	.NEUTRAL SWITCH ASSY	1					
15	98580–03015	.SCREW, PAN HEAD	2					
16	EL8–48281–00	.SCREW	1					
17	97890–05025	.SCREW, PAN HEAD	2					
18	6X0–48261–00	.ARM, THROTTLE	1					
19	EL8–48191–00	.WASHER 1	1					
20	97380–06018	.BOLT	3					
21	703–48345–01	.CABLE END, REMOTE CONTROL 2	2					
22	EL8–48271–00	.ARM, SHIFT	1					
23	EL8–48127–00	.SCREW 1	11					
24	703–48358–00	.ANCHOR, CABLE	1					
25	6X0–48211–00	.HOUSING,1	1					
26	EL8–48231–00	.HOUSING, GEAR	1					
27	EL8–48241–00	.ARM, DRIVE	1					

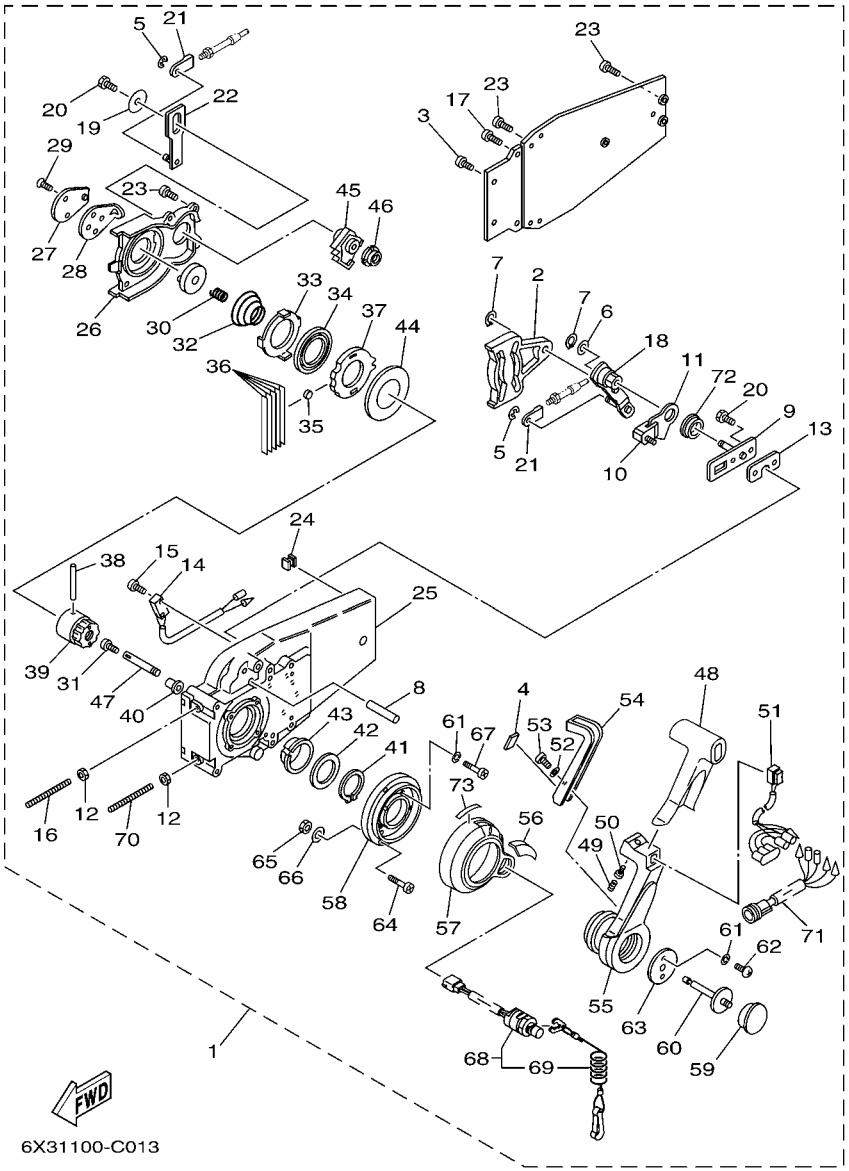

FIG. 5 CONTROL SIDE FLUSH PREMIUM

REF. NO.	PART NO.	DESCRIPTION	USA					REMARKS
28	EL8–48254–00	.STOPPER, THROTTLE ADJUSTING	1					
29	92780–06020	.SCREW, FLAT HEAD	2					
30	EL8–48158–00	.SPRING 1	1					
31	98580–04006	.SCREW, PAN HEAD	1					
32	EL8–48244–00	.SPRING, FREE ACCEL.	1					
33	EL8–48245–00	.PLATE, LOCK	1					
34	704–48178–00	.PLATE, SHIFT	1					
35	701–48248–00	.ROLLER, FREE ACCEL.	1					
36	704–48238–00	.SPRING, DETENT	5					
37	6X0–48121–00	.GEAR 1	1					
38	EL8–48164–00	.PIN 2	1					
39	EL8–48242–10	.SHAFT, DRIVE	1					
40	702–48263–00	.BUSHING	1					
41	EL8–48279–00	.CIRCLIP 2	1					
42	704–48193–00	.WASHER 3	1					
43	EL8–48234–00	.BUSHING 1	1					
44	703–48192–00	.WASHER 2	1					
45	EL8–48233–00	.GEAR 2	1					
46	702–48235–00	.BUSHING	1					
47	6X0–48153–00	.SHAFT, FREE ACCEL.	1					
48	6X3–48222–01	.GRIP, CONTROL LEVER	1					
49	703–48227–00	.SPRING, NEUTRAL LOCK	1					
50	98580–05008	.SCREW, PAN HEAD	1					
51	6X3–82563–01	.TRIM & TILT SWITCH ASSY	1					
52	6X0–48288–00	.WASHER, PLAIN	1					
53	6X0–48127–00	.SCREW 1	1					
54	6X0–48223–00	.LOCK, NEUTRAL	1					

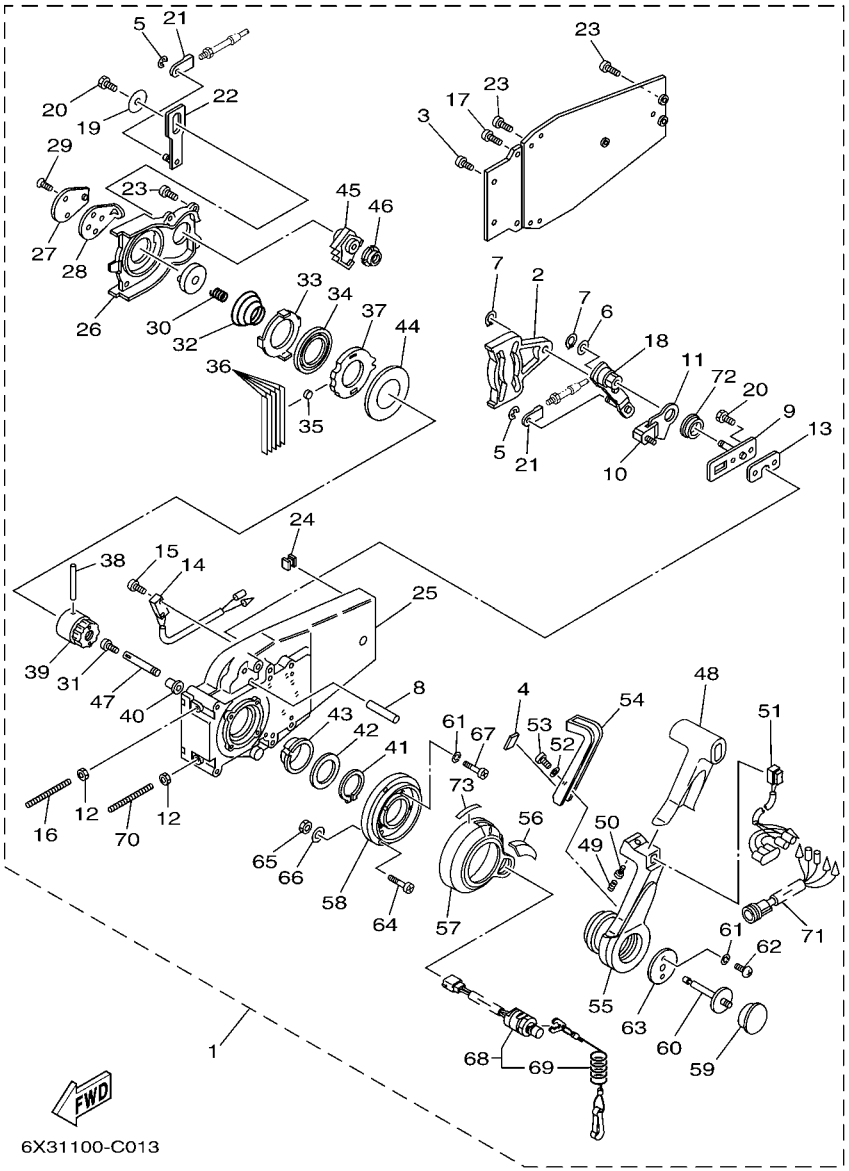

FIG. 5 CONTROL SIDE FLUSH PREMIUM

REF. NO.	PART NO.	DESCRIPTION	USA					REMARKS
55	6X3–48221–00	.LEVER, CONTROL	1					
56	6X3–48225–10	.COVER	1					
57	6X3–48225–00	.COVER	1					
58	6X3–48111–00	.BODY, REMOTE CONTROL 1	1					
59	6X3–48225–20	.COVER	1					
60	6X0–48155–00	.PLUNGER	1					
61	92990–05300	.WASHER, INTERNAL TOOTH	6					
62	6X0–48281–00	.SCREW	2					
63	6X0–48193–00	.WASHER 3	1					
64	97890–06035	.SCREW, PAN HEAD	3					UR
	6X0–48128–00	.SCREW(M6X30)	3					UR
65	6X0–48156–00	.NUT 1	3					
66	701–48287–00	.WASHER	3					
67	6X3–48129–00	.SCREW 3	4					
68	6X3–82575–00	.ENGINE STOP SWITCH ASSY	1					
69	682–82556–00	..LANYARD, STOP SWITCH	1					
70	704–48281–00	.SCREW	1					
71	704–82541–10	.WIRE, LEAD	1					
72	6X0–48116–00	.BUSHING	1					
73	6X3–44191–00	.INDICATOR, SHIFT	1					

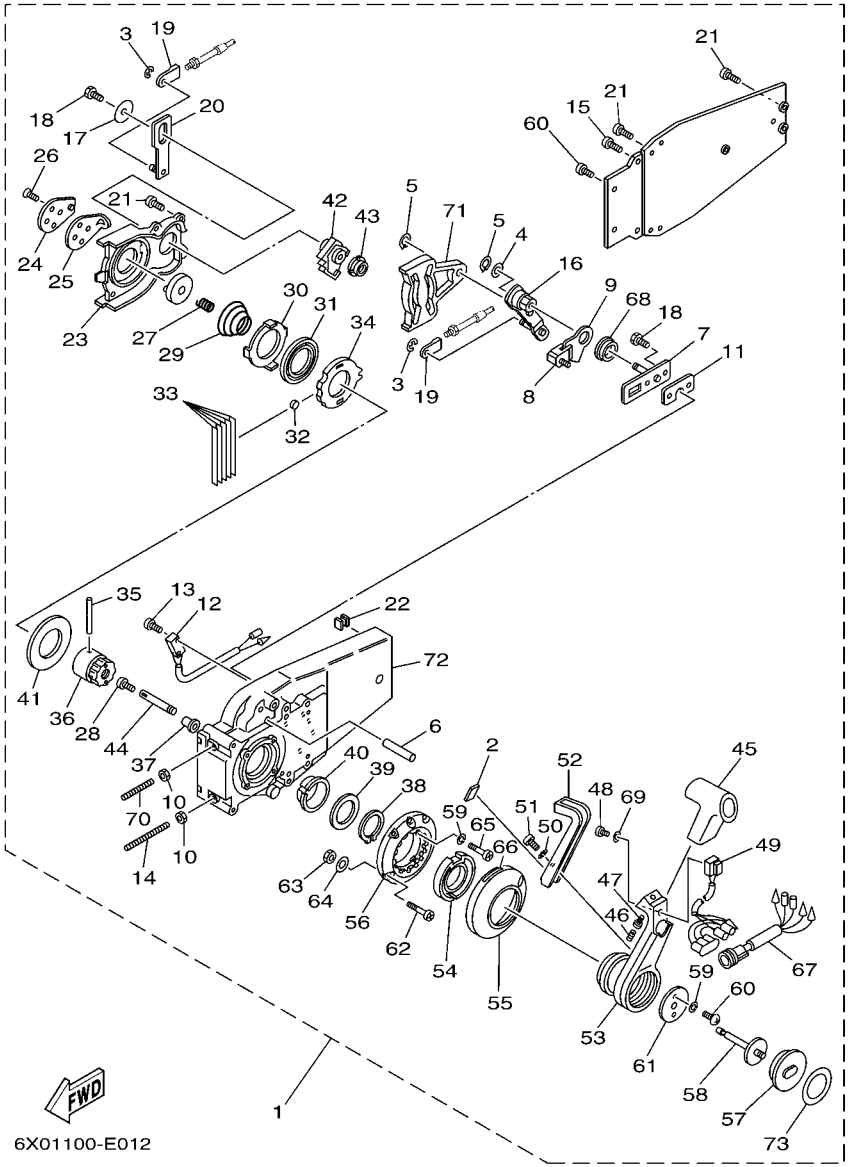

FIG. 6 CONTROL FLUSH STANDARD

REF. NO.	PART NO.	DESCRIPTION	USA					REMARKS
1	6X0–48206–12	REMOTE CONTROL ASSY	1					WITH PT/T SW.
2	6X0–48138–00	.CAP, LOCK ARM	1					
3	93430–06024	.CIRCLIP	3					
4	92990–10600	.WASHER, PLATE	1					
5	EL8–48259–00	.CIRCLIP 1	2					
6	6X0–48265–00	.SHAFT, FRICTION	1					
7	6X0–48262–00	.SHAFT, THROTTLE	1					
8	6X0–48264–00	.THROTTLE, FRICTION	1					
9	6X0–48187–00	.PLATE, ADJUST	1					
10	95380–06600	.NUT, HEXAGON	2					
11	704–48266–00	.SPACER	1					
12	704–82540–00	.NEUTRAL SWITCH ASSY	1					
13	98580–03015	.SCREW, PAN HEAD	2					
14	704–48281–00	.SCREW	1					
15	97890–05025	.SCREW, PAN HEAD	2					
16	6X0–48261–00	.ARM, THROTTLE	1					
17	EL8–48191–00	.WASHER 1	1					
18	97380–06018	.BOLT	3					
19	703–48345–01	.CABLE END, REMOTE CONTROL 2	2					
20	EL8–48271–00	.ARM, SHIFT	1					
21	EL8–48127–00	.SCREW 1	9					
22	703–48358–00	.ANCHOR, CABLE	1					
23	EL8–48231–00	.HOUSING, GEAR	1					
24	EL8–48241–00	.ARM, DRIVE	1					
25	EL8–48254–00	.STOPPER, THROTTLE ADJUSTING	1					
26	92780–06020	.SCREW, FLAT HEAD	2					
27	EL8–48158–00	.SPRING 1	1					

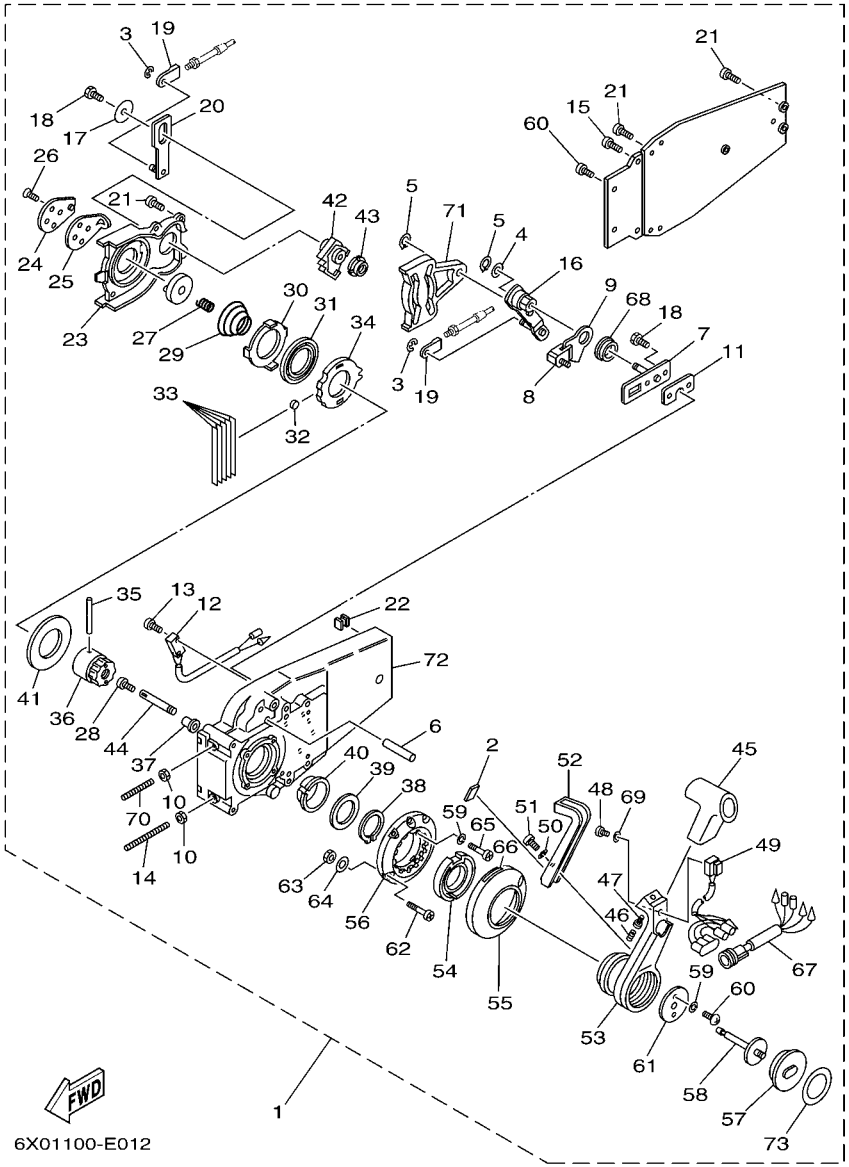

FIG. 6 CONTROL FLUSH STANDARD

REF. NO.	PART NO.	DESCRIPTION	USA					REMARKS
28	98580–04006	.SCREW, PAN HEAD	1					
29	EL8–48244–00	.SPRING, FREE ACCEL.	1					
30	EL8–48245–00	.PLATE, LOCK	1					
31	704–48178–00	.PLATE, SHIFT	1					
32	701–48248–00	.ROLLER, FREE ACCEL.	1					
33	704–48238–00	.SPRING, DETENT	5					
34	6X0–48121–00	.GEAR 1	1					
35	EL8–48164–00	.PIN 2	1					
36	EL8–48242–10	.SHAFT, DRIVE	1					
37	702–48263–00	.BUSHING	1					
38	EL8–48279–00	.CIRCLIP 2	1					
39	704–48193–00	.WASHER 3	1					
40	EL8–48234–00	.BUSHING 1	1					
41	703–48192–00	.WASHER 2	1					
42	EL8–48233–00	.GEAR 2	1					
43	702–48235–00	.BUSHING	1					
44	6X0–48153–00	.SHAFT, FREE ACCEL.	1					
45	6X0–48222–00	.GRIP, CONTROL LEVER	1					
46	703–48227–00	.SPRING, NEUTRAL LOCK	1					
47	98580–05008	.SCREW, PAN HEAD	1					
48	98580–04010	.SCREW, PAN HEAD	1					
49	6X0–82563–01	.TRIM & TILT SWITCH ASSY	1					
50	6X0–48288–00	.WASHER, PLAIN	1					
51	6X0–48127–00	.SCREW 1	1					
52	6X0–48223–00	.LOCK, NEUTRAL	1					
53	6X0–48221–00	.LEVER, CONTROL	1					
54	6X0–48245–00	.PLATE, LOCK	1					

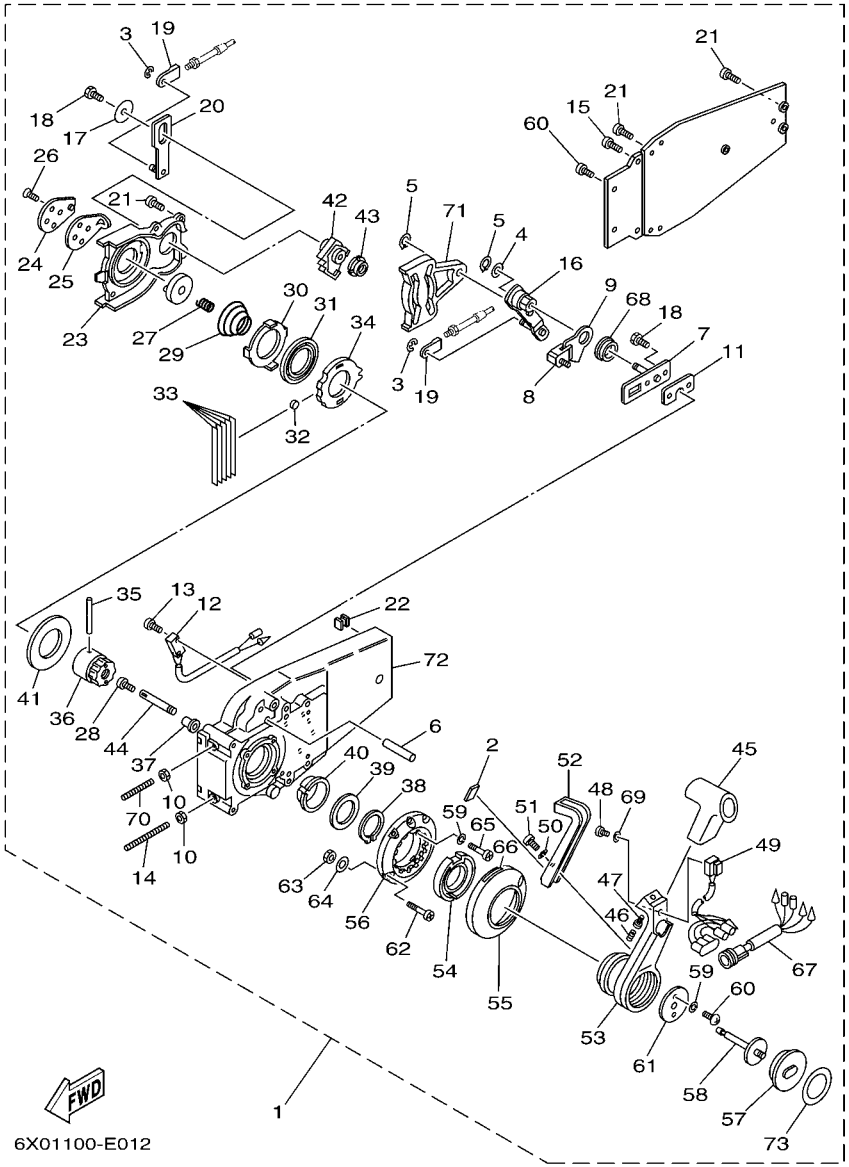

FIG. 6 CONTROL FLUSH STANDARD

REF. NO.	PART NO.	DESCRIPTION	USA					REMARKS
55	6X0–48225–00	.COVER	1					
56	6X0–48111–00	.BODY, REMOTE CONTROL 1	1					
57	704–48225–00	.COVER	1					
58	6X0–48155–00	.PLUNGER	1					
59	92990–05300	.WASHER, INTERNAL TOOTH	6					
60	6X0–48281–00	.SCREW	4					
61	6X0–48193–00	.WASHER 3	1					
62	6X0–48128–00	.SCREW(M6X30)	3					UR
	97890–06035	.SCREW, PAN HEAD	3					UR
63	6X0–48156–00	.NUT 1	3					
64	701–48287–00	.WASHER	3					
65	6X0–48129–00	.SCREW 3	4					
66	6E0–44191–11	.INDICATOR, SHIFT	1					
67	704–82541–10	.WIRE, LEAD	1					
68	6X0–48116–00	.BUSHING	1					
69	92990–04300	.WASHER, PLAIN	1					
70	EL8–48281–00	.SCREW	1					
71	EL8–48251–00	.PLATE, CAM	1					
72	6X0–48211–00	.HOUSING,1	1					
73	6X0–48215–00	.GRAPHIC	1					

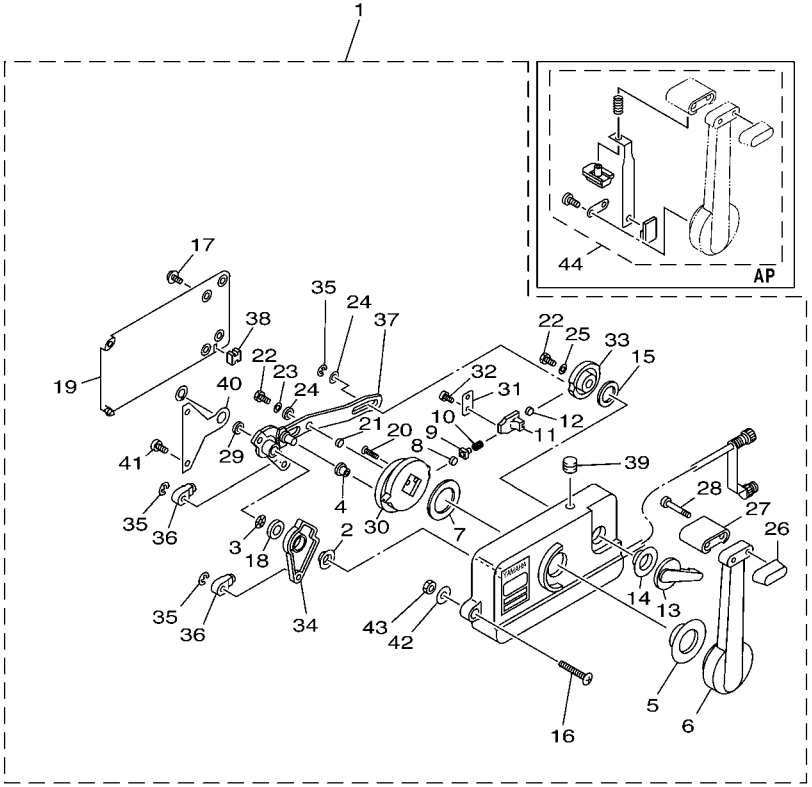

FIG. 7 CONTROL 701 MANUAL PULL

REF. NO.	PART NO.	DESCRIPTION	USA					REMARKS
1	701–48101–51	REMOTE CONTROL ASSY	1					
2	701–48235–00	.BUSHING	1					
3	701–48197–10	.WASHER, WAVE	1					
4	701–48252–00	.ROLLER, CAM	1					
5	701–48234–00	.BUSHING 1	1					
6	701–48221–00	.LEVER, CONTROL	1					
7	701–48196–11	.WASHER, WAVE	1					
8	701–48236–00	.ROLLER, DETENT	1					
9	702–48237–00	.ADAPTOR	1					
10	702–48238–00	.SPRING, DETENT	1					
11	701–48249–00	.ADAPTOR, SPRING	1					
12	701–48248–00	.ROLLER, FREE ACCEL.	1					
13	701–48152–11	.KNOB, FREE ACCEL.	1					
14	701–48243–00	.BUSHING	1					
15	701–48198–10	.WASHER, WAVE	1					
16	701–48281–10	.SCREW	3					
17	701–48289–00	.SCREW	4					
18	701–48268–00	.SPACER	1					
19	701–48213–00	.BACK PLATE 2	1					
20	92780–06025	.SCREW, FLAT HEAD	2					
21	701–48255–00	.COLLAR	1					
22	97390–06018	.BOLT	2					
23	702–48288–00	.WASHER, PLAIN	1					
24	701–48246–00	.SPACER	2					
25	92990–06300	.WASHER, INTERNAL TOOTH	1					
26	701–48229–00	.GRIP, CONTROL LEVER	1					
27	701–48222–00	.GRIP, CONTROL LEVER	1					

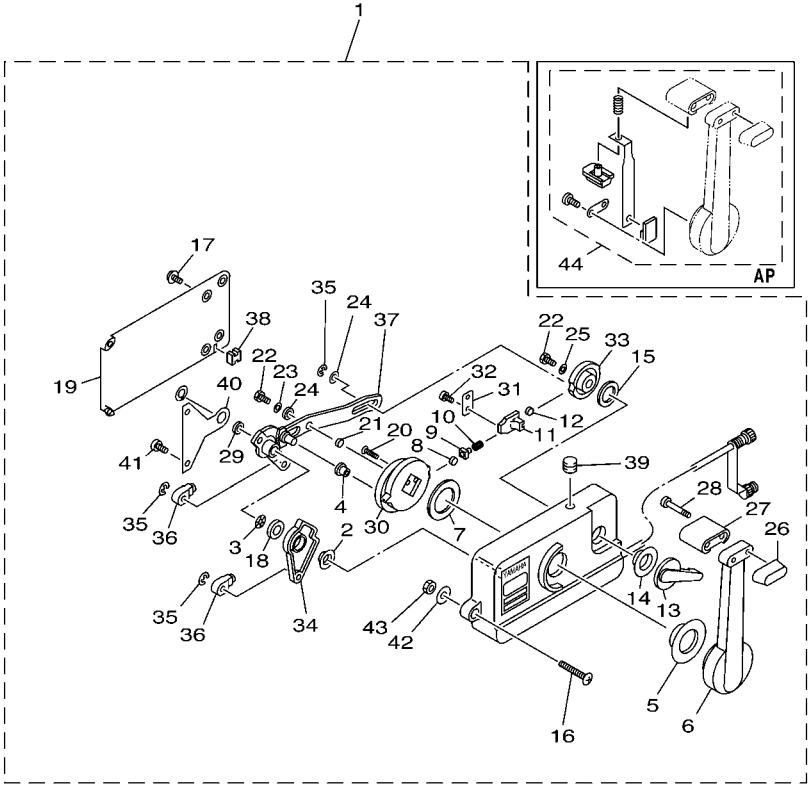

FIG. 7 CONTROL 701 MANUAL PULL

REF. NO.	PART NO.	DESCRIPTION	USA					REMARKS
28	701–48282–00	.SCREW	2					
29	701–48266–00	.SPACER	1					
30	701–48232–00	.GEAR	1					
31	701–48189–11	.RETAINER	1					
32	98580–05010	.SCREW, PAN HEAD	2					
33	701–48153–12	.SHAFT, FREE ACCEL.	1					
34	701–48271–00	.ARM, SHIFT	1					
35	93430–06024	.CIRCLIP	3					
36	703–48345–01	.CABLE END, REMOTE CONTROL 2	2					
37	701–48261–00	.ARM, THROTTLE	1					
38	701–48358–00	.ANCHOR, CABLE	1					
39	701–48138–50	.CAP, LOCK ARM	1					
40	701–48133–00	.PLATE, LINK	1					
41	98580–05020	.SCREW, PAN HEAD	2					
42	701–48287–00	.WASHER	3					
43	95380–06600	.NUT, HEXAGON	3					
44	701–48280–00	NEUTRAL LOCK KIT	1					AP

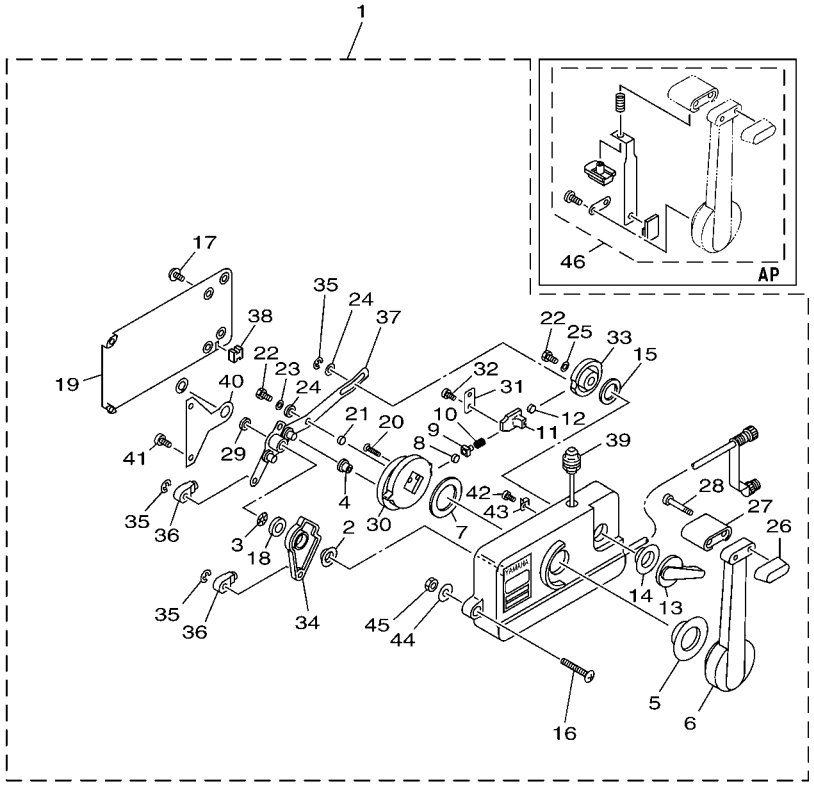

FIG. 8 CONTROL 701 MANUAL PUSH

REF. NO.	PART NO.	DESCRIPTION	USA					REMARKS
1	701–48130–02	REMOTE CONTROL ASSY 3	1					
2	701–48235–00	.BUSHING	1					
3	701–48197–10	.WASHER, WAVE	1					
4	701–48252–00	.ROLLER, CAM	1					
5	701–48234–00	.BUSHING 1	1					
6	701–48221–00	.LEVER, CONTROL	1					
7	701–48196–11	.WASHER, WAVE	1					
8	701–48236–00	.ROLLER, DETENT	1					
9	702–48237–00	.ADAPTOR	1					
10	702–48238–00	.SPRING, DETENT	1					
11	701–48249–00	.ADAPTOR, SPRING	1					
12	701–48248–00	.ROLLER, FREE ACCEL.	1					
13	701–48152–11	.KNOB, FREE ACCEL.	1					
14	701–48243–00	.BUSHING	1					
15	701–48198–10	.WASHER, WAVE	1					
16	701–48281–10	.SCREW	3					
17	701–48289–00	.SCREW	4					
18	701–48268–00	.SPACER	1					
19	701–48213–00	.BACK PLATE 2	1					
20	92780–06025	.SCREW, FLAT HEAD	2					
21	701–48255–00	.COLLAR	1					
22	97390–06018	.BOLT	2					
23	702–48288–00	.WASHER, PLAIN	1					
24	701–48246–00	.SPACER	2					
25	92990–06300	.WASHER, INTERNAL TOOTH	1					
26	701–48229–00	.GRIP, CONTROL LEVER	1					
27	701–48222–00	.GRIP, CONTROL LEVER	1					

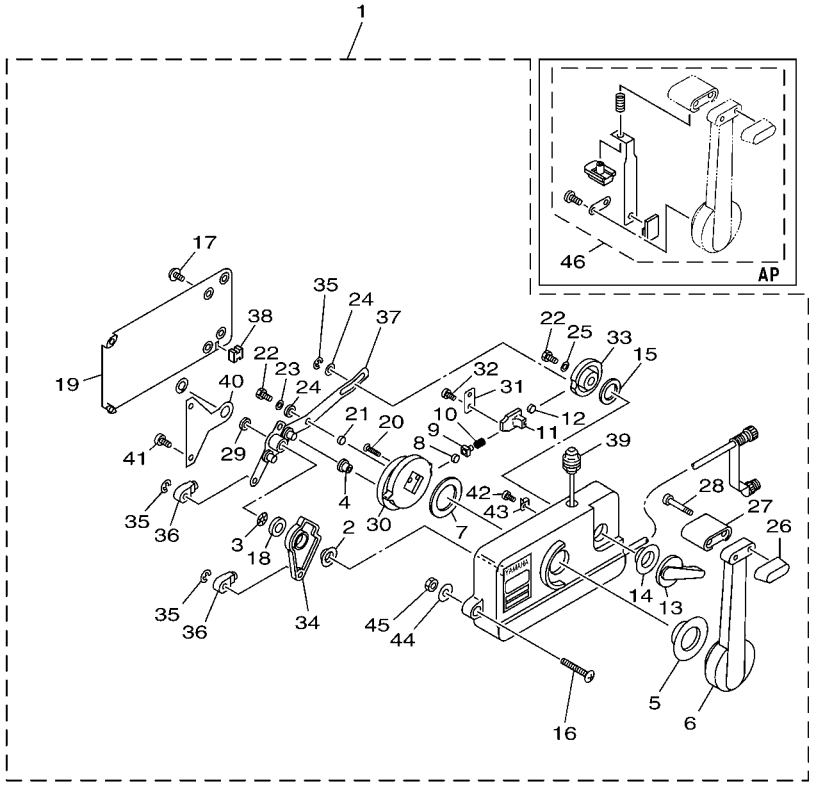

FIG. 8 CONTROL 701 MANUAL PUSH

REF. NO.	PART NO.	DESCRIPTION	USA					REMARKS
28	701–48282–00	.SCREW	2					
29	701–48266–00	.SPACER	1					
30	701–48232–00	.GEAR	1					
31	701–48189–11	.RETAINER	1					
32	98580–05010	.SCREW, PAN HEAD	2					
33	701–48153–12	.SHAFT, FREE ACCEL.	1					
34	701–48271–00	.ARM, SHIFT	1					
35	93430–06024	.CIRCLIP	3					
36	703–48345–01	.CABLE END, REMOTE CONTROL 2	2					
37	701–48261–20	.ARM, THROTTLE	1					
38	701–48358–00	.ANCHOR, CABLE	1					
39	701–82550–51	.ENGINE STOP SWITCH ASSY	1					
40	701–48133–00	.PLATE, LINK	1					
41	98580–05020	.SCREW, PAN HEAD	2					
42	701–48283–00	.SCREW	1					
43	701–82594–00	.CLAMP	1					
44	701–48287–00	.WASHER	3					
45	95380–06600	.NUT, HEXAGON	3					
46	701–48280–00	NEUTRAL LOCK KIT	1					AP

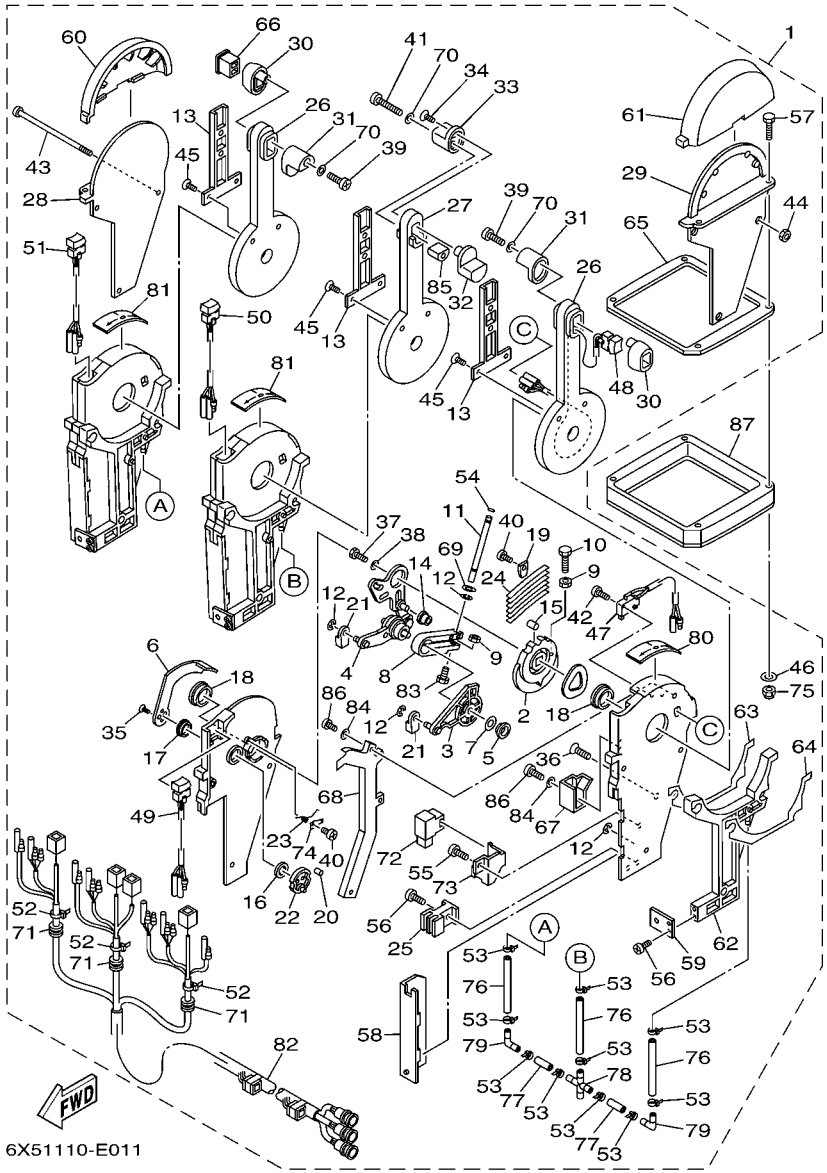

FIG. 9 CONTROL 6X5 TRIPLE

REF. NO.	PART NO.	DESCRIPTION	USA					REMARKS
1	6X5–48207–01	REMOTE CONTROL ASSY	1					
2	6X5–48232–00	.GEAR	3					
3	6X5–48271–00	.ARM, SHIFT	3					
4	6X5–48261–00	.ARM, THROTTLE	3					
5	703–48235–00	.BUSHING	3					
6	6X5–48152–00	.KNOB, FREE ACCEL.	3					
7	703–48268–00	.SPACER	3					
8	6X5–48264–00	.FRICTION, THROTTLE	3					
9	95380–05600	.NUT	6					
10	97380–05025	.BOLT	3					
11	6X5–48265–00	.SHAFT, FRICTION	3					
12	93430–06024	.CIRCLIP	12					
13	6X5–48224–00	.COVER, CONTROL LEVER	3					
14	703–48252–00	.ROLLER, CAM	3					
15	701–48248–00	.ROLLER, FREE ACCEL.	3					
16	703–48198–00	.WASHER, WAVE	3					
17	703–48243–00	.BUSHING	3					
18	703–48236–00	.BUSHING 1	6					
19	703–48189–00	.RETAINER	3					
20	703–48234–00	.ROLLER, DETENT	3					
21	703–48345–01	.CABLE END, REMOTE CONTROL 2	6					
22	703–48153–00	.SHAFT, FREE ACCEL.	3					
23	703–48244–00	.SPRING, FREE ACCEL.	3					
24	703–48238–00	.SPRING, DETENT	18					
25	6X5–48358–00	.ANCHOR, CABLE	3					
26	6X5–48221–00	.LEVER, CONTROL	2					
27	6X5–48221–10	.LEVER, CONTROL	1					

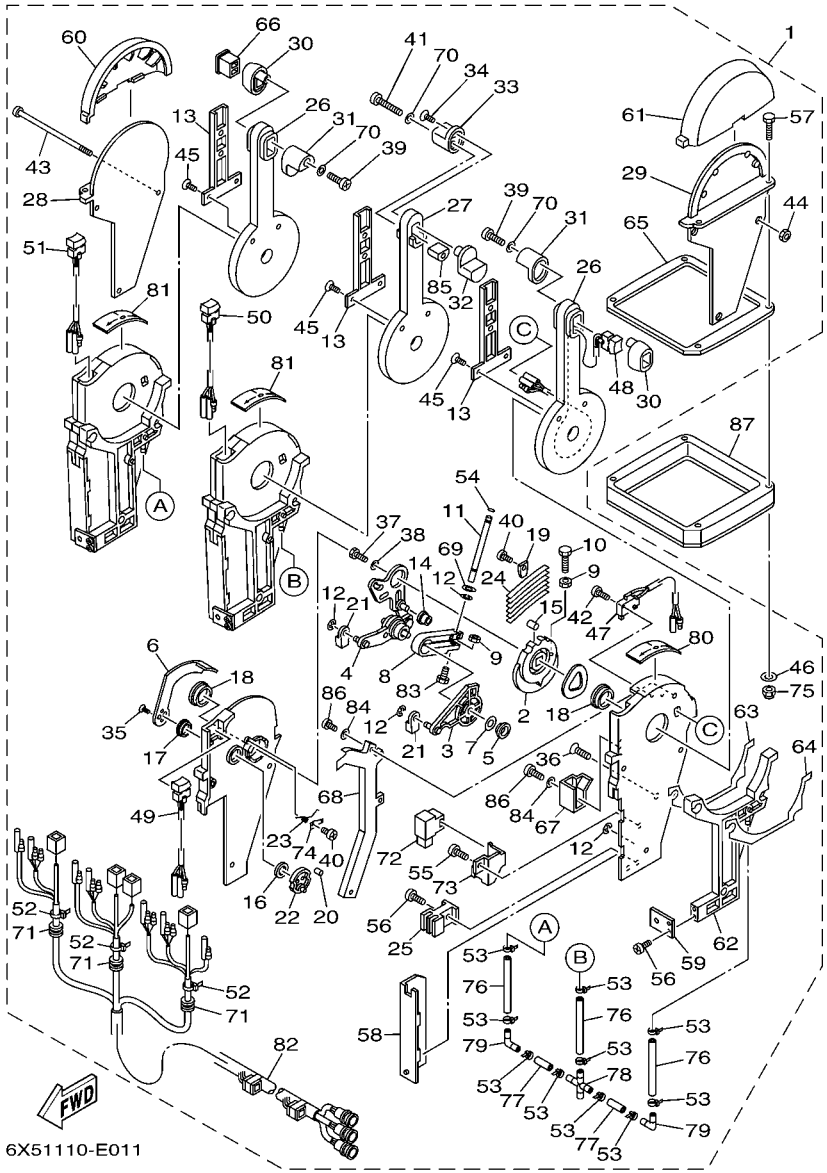

FIG. 9 CONTROL 6X5 TRIPLE

REF. NO.	PART NO.	DESCRIPTION	USA					REMARKS
28	6X5–48144–10	.PLATE, STOPPER 2	1					
29	6X5–48144–00	.PLATE, STOPPER 2	1					
30	6X5–48229–00	.GRIP, CONTROL LEVER	2					
31	6X5–48222–00	.GRIP, CONTROL LEVER	2					
32	6X5–48229–10	.GRIP, CONTROL LEVER	1					
33	6X5–48222–10	.GRIP, CONTROL LEVER	1					
34	6X5–48127–00	.SCREW 1	1					
35	703–48128–00	.SCREW 2	6					
36	6X5–48129–00	.SCREW 3	9					
37	97380–08030	.BOLT	3					
38	92990–08200	.WASHER, PLAIN	3					
39	6X5–48127–10	.SCREW 1	2					
40	98580–04006	.SCREW, PAN HEAD	6					
41	6X5–48127–20	.SCREW 1	1					
42	98580–03015	.SCREW, PAN HEAD	6					
43	6X5–48267–00	.BOLT SET	3					
44	95780–06300	.NUT, FLANGE	3					
45	98780–04010	.SCREW, FLAT HEAD	6					
46	704–48287–00	.WASHER	4					
47	6X5–82540–00	.NEUTRAL SWITCH ASSY	3					
48	6X5–82563–01	.TRIM & TILT SWITCH ASSY	1					
49	6X5–82563–11	.TRIM & TILT SWITCH ASSY	1					
50	6X5–82563–21	.TRIM & TILT SWITCH ASSY	1					
51	6X5–82563–31	.TRIM & TILT SWITCH ASSY	1					
52	703–82591–00	.BAND	3					
53	6X4–42821–00	.BAND, CLAMP	14					
54	6X5–48351–00	.SEAL, RUBBER	3					

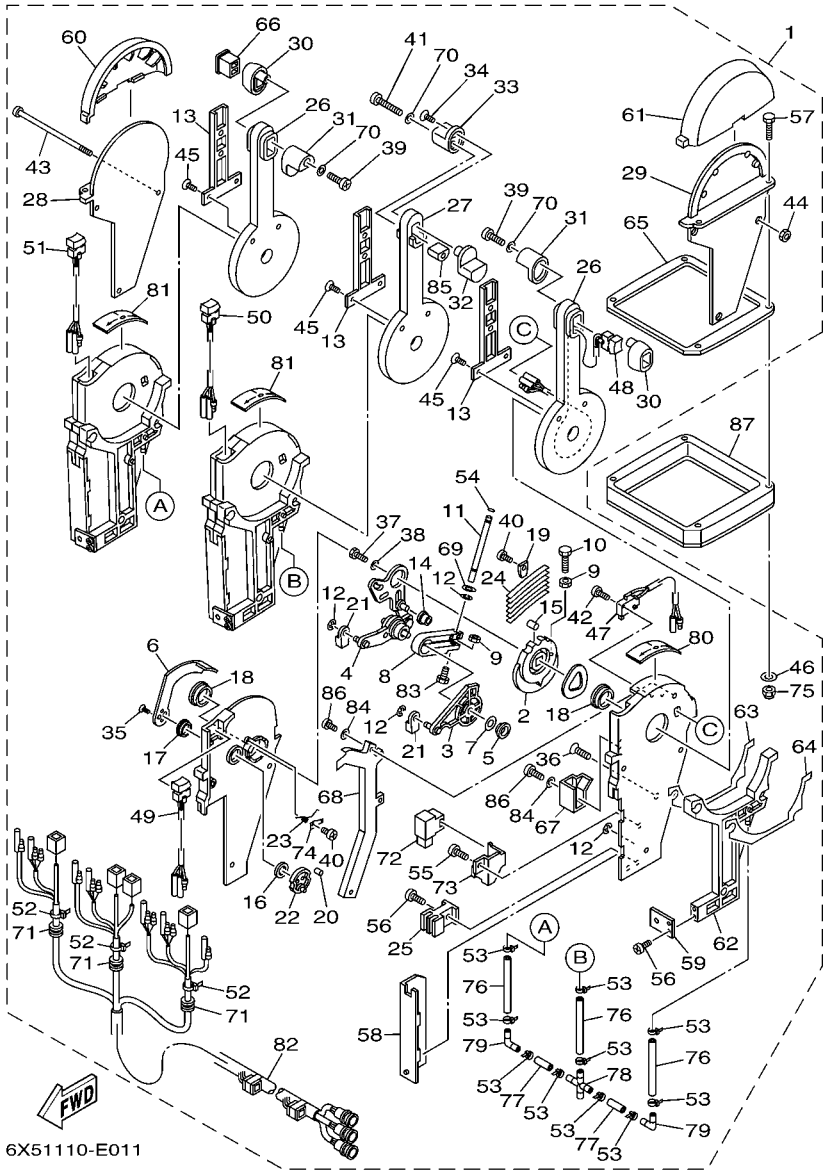

FIG. 9 CONTROL 6X5 TRIPLE

REF. NO.	PART NO.	DESCRIPTION	USA					REMARKS
55	98580–05010	.SCREW, PAN HEAD	3					
56	98580–05012	.SCREW, PAN HEAD	12					
57	98580–05040	.SCREW, PAN HEAD	4					UR
	97780–05130	.SCREW, TAPPING	4					UR
58	6X5–48213–00	.BACK PLATE 2	3					
59	6X5–48354–00	.SET-PLATE, CABLE	3					
60	6X5–48119–10	.COVER	1					
61	6X5–48119–00	.COVER	1					
62	6X5–48246–00	.SPACER	3					
63	6X5–48214–00	.PAD	3					
64	6X5–48214–10	.PAD	3					
65	6X5–48176–00	.GROMMET	1					
66	6X5–48222–20	.GRIP, CONTROL LEVER	1					
67	6X5–48219–00	.COVER, LEAD	3					
68	6X5–48225–00	.COVER	3					
69	92990–08600	.WASHER, PLATE	3					
70	92990–05300	.WASHER, INTERNAL TOOTH	3					
71	6X5–48175–00	.BOOT	3					
72	704–81950–10	.RELAY ASSY	4					
73	6X5–48228–00	.HOLDER, SWITCH	3					
74	703–48246–00	.SPACER	3					
75	95380–06600	.NUT, HEXAGON	4					
76	6X5–48317–00	.TUBE	3					
77	6X5–48317–10	.TUBE	2					
78	6X5–48338–00	.CONNECTOR	1					
79	6X5–48338–10	.CONNECTOR	2					
80	6X5–48215–00	.GRAPHIC	1					

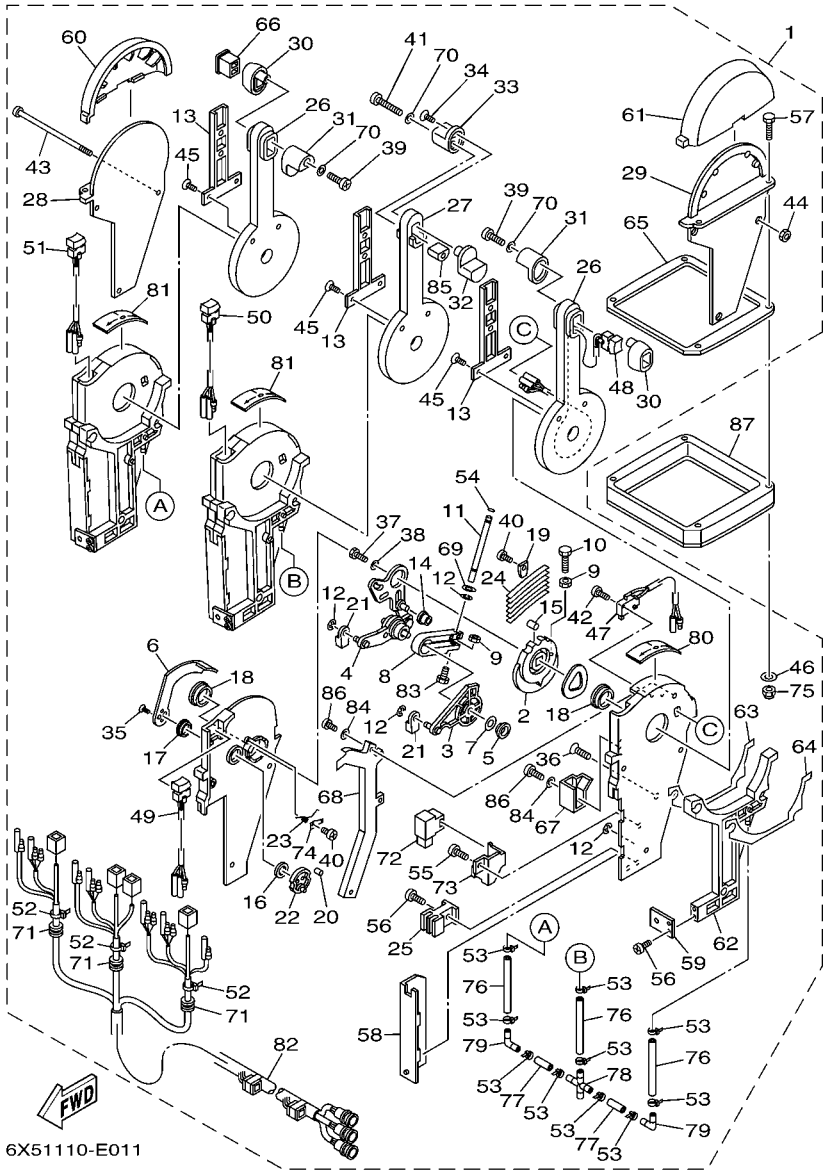

FIG. 9 CONTROL 6X5 TRIPLE

REF. NO.	PART NO.	DESCRIPTION	USA					REMARKS
81	6X5–48215–10	.GRAPHIC	2					
82	6X5–82590–00	.WIRE HARNESS ASSY	1					
83	6X5–48267–00	.BOLT SET	3					
84	92990–05200	.WASHER, PLAIN	15					
85	6X5–48222–30	.GRIP, CONTROL LEVER	1					
86	98580–05012	.SCREW, PAN HEAD	15					
87	6X5–48293–00	SPACER, REMOTE CONTROL	1					LM

Application Model

			PART NO. / PART NAME								
			FIG.NO.								
MODEL CODE	MODEL NAME	SERIAL NO.	**6X4-42101-01** HANDLE, STEERING	**6X4-42102-00** FITTING KIT	**6X4-42102-10** FITTING KIT	**6X4-42102-20** FITTING KIT	**6X4-42102-30** FITTING KIT	**6X4-42102-40** FITTING KIT	**6X4-42102-50** FITTING KIT	**6X4-42102-60** FITTING KIT	**6X4-42103-01** TILLER HANDLE KIT
			FIG.10, 11	FIG.12, 14	FIG.13, 14	FIG.15, 16	FIG.17, 18	FIG.19, 21	FIG.20, 21	FIG.22, 23	FIG.24, 25, 26
65W7	F25-2007	65W:1033209-									*
67C6	F40-2007	67C:1028012-	*				*				
6C13	F50-2007	6C1:1012527-	*			*					
6C53	F60-2007	6C5:1016449-	*			*					
6C23	T50-2007	6C2:1004629-	*			*					
6C63	T60-2007	6C6:1005083-	*			*					
6D63	F75-2007	62P:1008069-	*		*						
6D83	F90-2007	61P:1021936-	*		*						
68V6	F115-2007	68V:1066827-	*	*							
62XC	50-2007	6H5K:1013173-	*							*	
6H36	70-2007	6H3K:1007285-	*						*		
6H19	90-2007	6H1:1028291-	*					*			

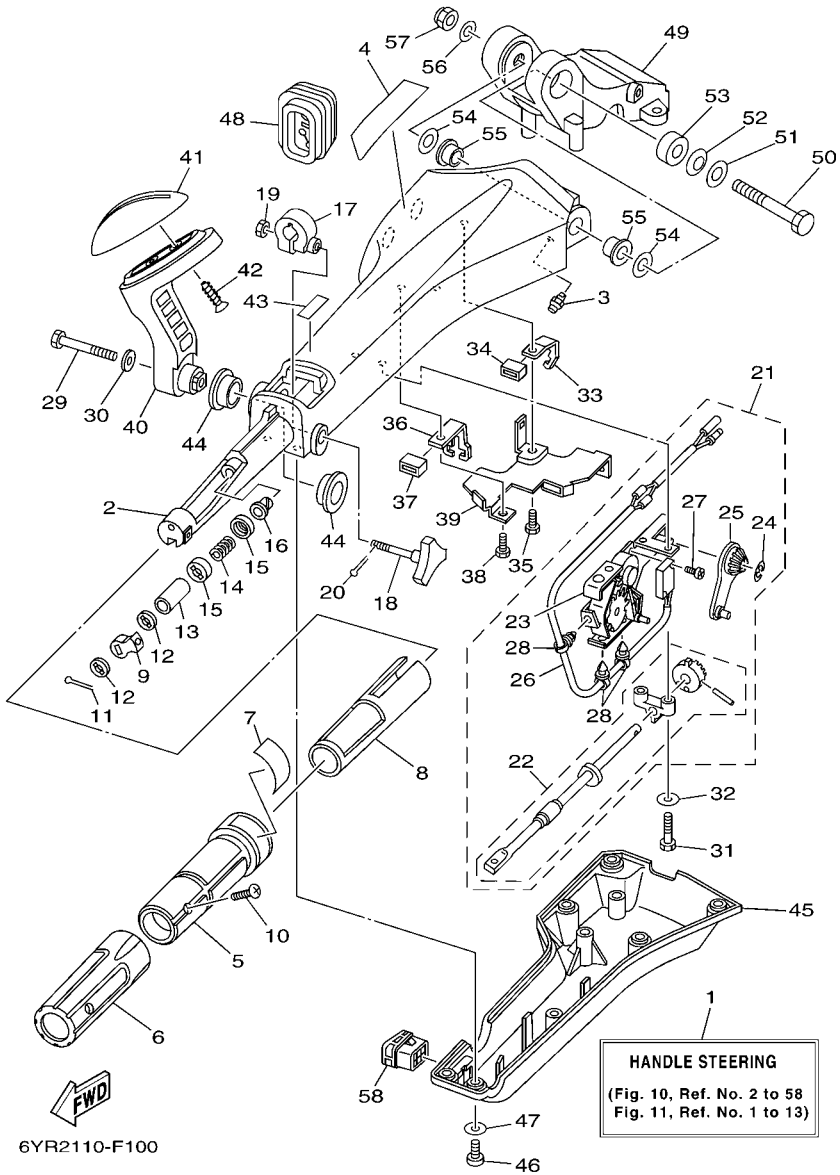

FIG. 10 TILLER HANDLE BASE ASSEMBLY

REF. NO.	PART NO.	DESCRIPTION	USA					REMARKS
1	6X4–42101–01	HANDLE, STEERING	1					LM
2	6X4–42111–01–4D	HANDLE, STEERING	1					
3	93700–06M03	NIPPLE, GREASE	1					
4	6X4–48215–00	GRAPHIC	1					
5	6X4–42119–00	GRIP, STEERING HANDLE	1					
6	6X4–42177–00	RUBBER, HANDLE	1					
7	6X4–42137–00	INDICATOR, THROTTLE	1					
8	6X4–41291–00	BUSHING	1					
9	6X4–44139–00	COLLAR	1					
10	90142–05001	SCREW, COUNTERSUNK	1					
11	91490–20010	PIN, COTTER	1					
12	6X4–44177–00	WASHER	2					
13	6X4–42128–00	COLLAR, DISTANCE 1	1					
14	90501–23215	SPRING, COMPRESSION	1					
15	6X4–44188–00	WASHER	2					
16	90386–08032	BUSH	1					
17	63D–42126–00	FRICTION, STEERING HANDLE GRIP	1					
18	6X4–48154–00	KNOB, THROTTLE	1					
19	95380–06600	NUT, HEXAGON	1					
20	91490–20010	PIN, COTTER	1					
21	6X4–44100–00	SHIFT LINK ASSY	1					
22	6X4–42115–00	.SHAFT, STEERING HANDLE	1					
23	6X4–44102–00	.SHIFT ASSIST ASSY.	1					
24	6X4–14137–00	.CLIP	1					
25	6X4–48261–00	.ARM, THROTTLE	1					
26	6X4–82540–00	.NEUTRAL SWITCH ASSY	1					
27	6A5–48129–10	.SCREW 3	2					

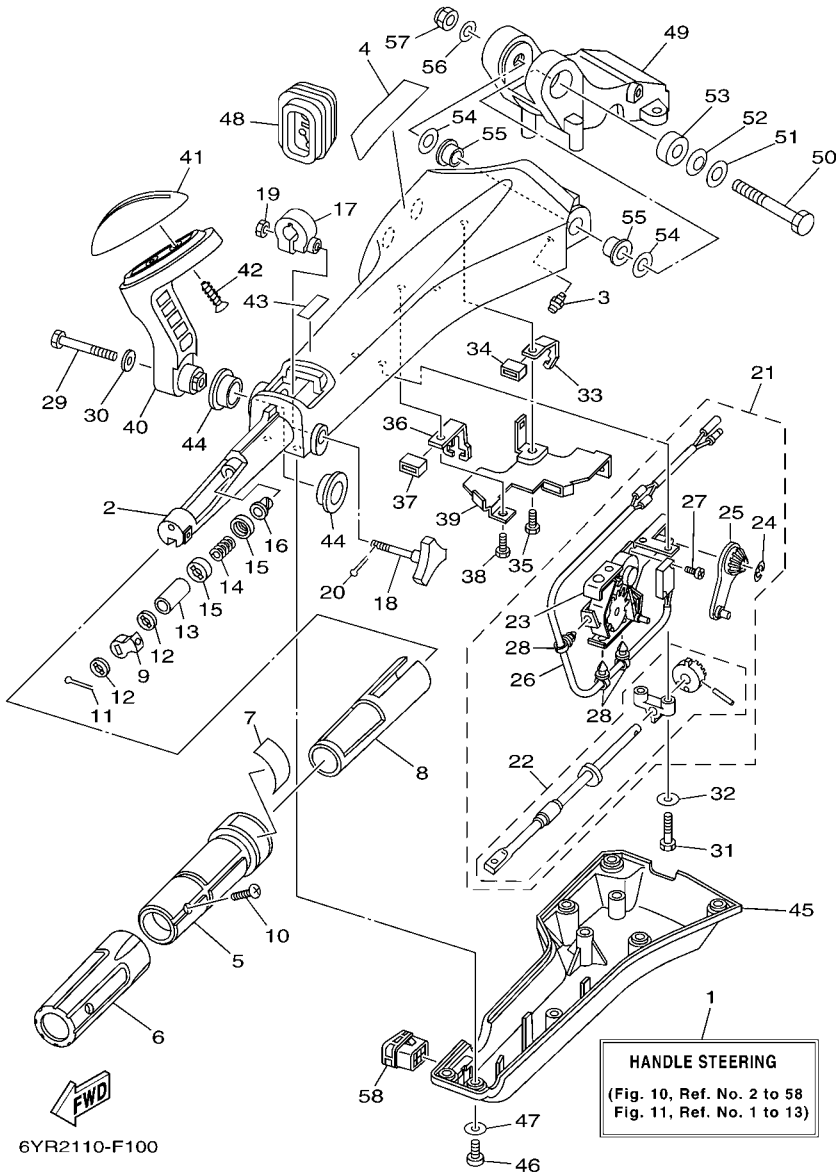

FIG. 10 TILLER HANDLE BASE ASSEMBLY

REF. NO.	PART NO.	DESCRIPTION	USA					REMARKS
28	6X4–42821–00	.BAND, CLAMP	3					
29	97095–08040	BOLT	1					
30	92995–08600	WASHER	1					
31	97095–06030	BOLT	2					
32	92995–06600	WASHER	2					
33	6X4–48538–00	CLAMP, CABLE 1	1					
34	6X4–26367–00	PROTECTOR	1					
35	97095–06014	BOLT	1					
36	6X4–48538–10	CLAMP, CABLE 1	1					
37	6X4–26367–00	PROTECTOR	1					
38	97095–06014	BOLT	1					
39	6X4–42159–00	STAY	1					
40	6X4–44159–00–4D	HANDLE, GEAR SHIFT	1					
41	6X4–44173–00	LEVER, SHIFT CONTROL	1					
42	97780–60920	SCREW, TAPPING	2					
43	6G8–44191–00	INDICATOR, SHIFT	1					
44	90386–26MA3	BUSH	2					
45	6X4–42131–01	COVER, HANDLE STEERING	1					
46	97885–06016	SCREW, PAN HEAD	6					
47	92995–06600	WASHER	6					
48	6X4–42725–00	GROMMET	1					
49	63D–42121–22–4D	BRACKET	1					
50	90101–12014	BOLT	1					
51	92990–12200	WASHER, PLAIN	1					
52	90206–12M22	WASHER, WAVE	1					
53	90387–12M02	COLLAR	1					
54	90201–12035	WASHER, PLATE	2					

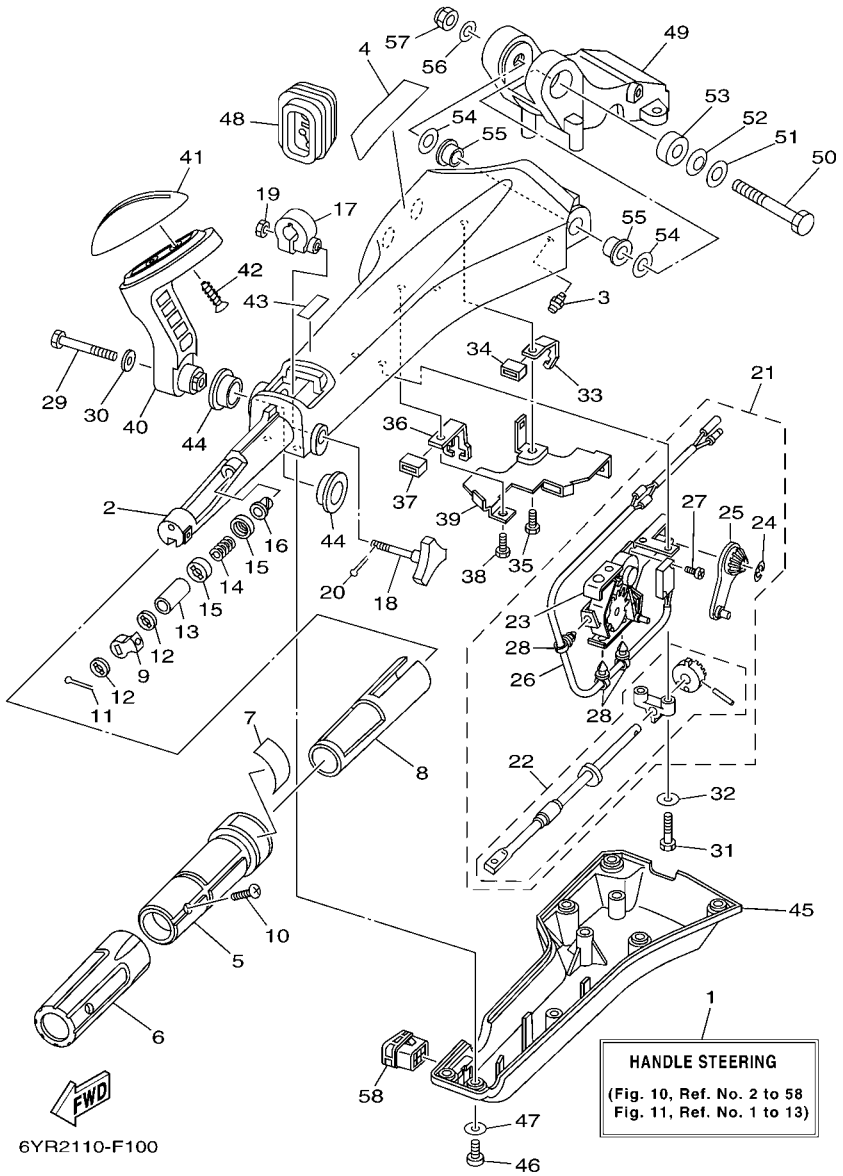

FIG. 10 TILLER HANDLE BASE ASSEMBLY

REF. NO.	PART NO.	DESCRIPTION	USA					REMARKS
55	90386–12003	BUSH	2					
56	92990–12600	WASHER, PLATE	1					
57	90185–12M12	NUT, SELF-LOCKING	1					
58	6X4–42728–10	CAP	1					

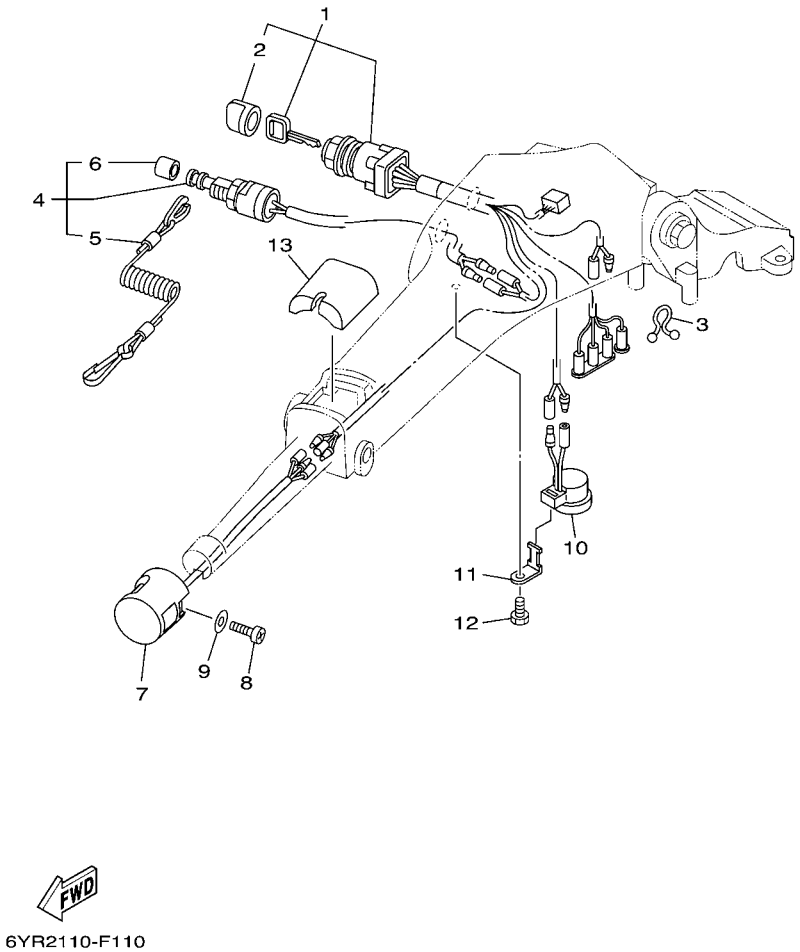

FIG. 11 TILLER HANDLE ELECTRICAL

REF. NO.	PART NO.	DESCRIPTION	USA					REMARKS
1	6X4–82510–00	MAIN SWITCH ASSY	1					
2	676–82577–00	.CAP, KEY	1					
3	90464–08M07	CLAMP	1					
4	69W–82575–00	ENGINE STOP SWITCH ASSY	1					
5	682–82556–00	.LANYARD, STOP SWITCH	1					
6	689–8257Y–00	.CAP	1					
7	6X4–82563–00	TRIM & TILT SWITCH ASSY	1					
8	97880–06016	SCREW, PAN HEAD	1					
9	92990–06600	WASHER, PLATE	1					
10	6X4–83383–00	BUZZER	1					
11	6X4–83386–00	STAY, BUZZER	1					
12	97095–06014	BOLT	1					
13	6X4–81942–00	COVER	1					

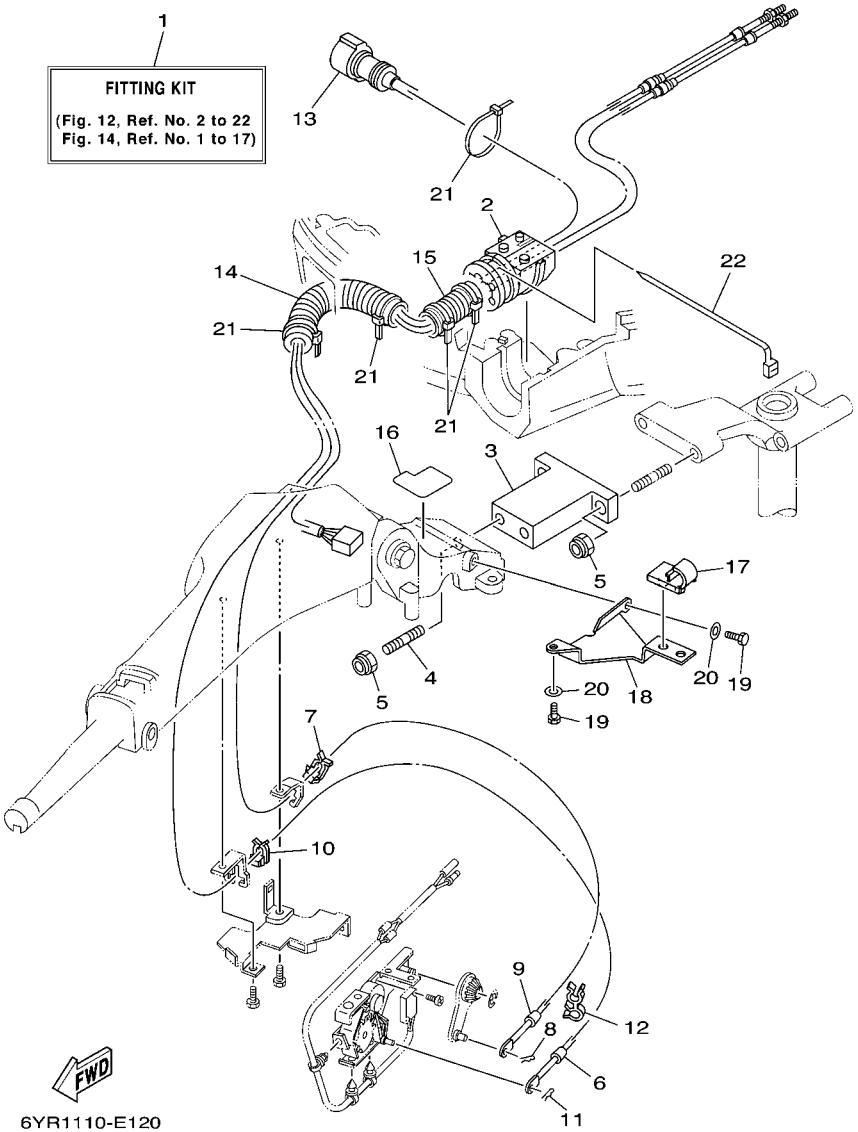

FIG. 12 TILLER HANDLE FITTING KIT F115

REF. NO.	PART NO.	DESCRIPTION	USA					REMARKS
1	6X4–42102–00	FITTING KIT	1					LM
2	68V–42725–10	GROMMET	1					
3	6X4–42121–10–4D	BRACKET	1					
4	90116–10175	BOLT, STUD	2					
5	90185–10051	NUT, SELF-LOCKING	4					
6	67G–48321–20	CABLE	1					
7	63D–48538–00	CLAMP, CABLE 1	1					
8	90468–10005	CLIP	1					
9	67G–26301–10	THROTTLE CABLE ASSY	1					
10	63D–48538–00	CLAMP, CABLE 1	1					
11	90468–10005	CLIP	1					
12	90464–09M42	CLAMP	1					
13	6X4–82586–20	EXT., WIRE HARNESS (L: 1.25M)	1					
14	90447–22007	HOSE, WITH SPRING	1					
15	6G5–83557–00	TUBE	1					
16	6X4–42735–00	PROTECTOR	1					
17	63D–24367–00	CLAMP, FUEL PIPE 2	1					
18	6X4–24364–00	STAY	1					
19	97095–06016	BOLT	2					
20	92995–06600	WASHER	2					
21	90465–13M24	CLAMP	5					
22	90465–13M30	CLAMP	1					

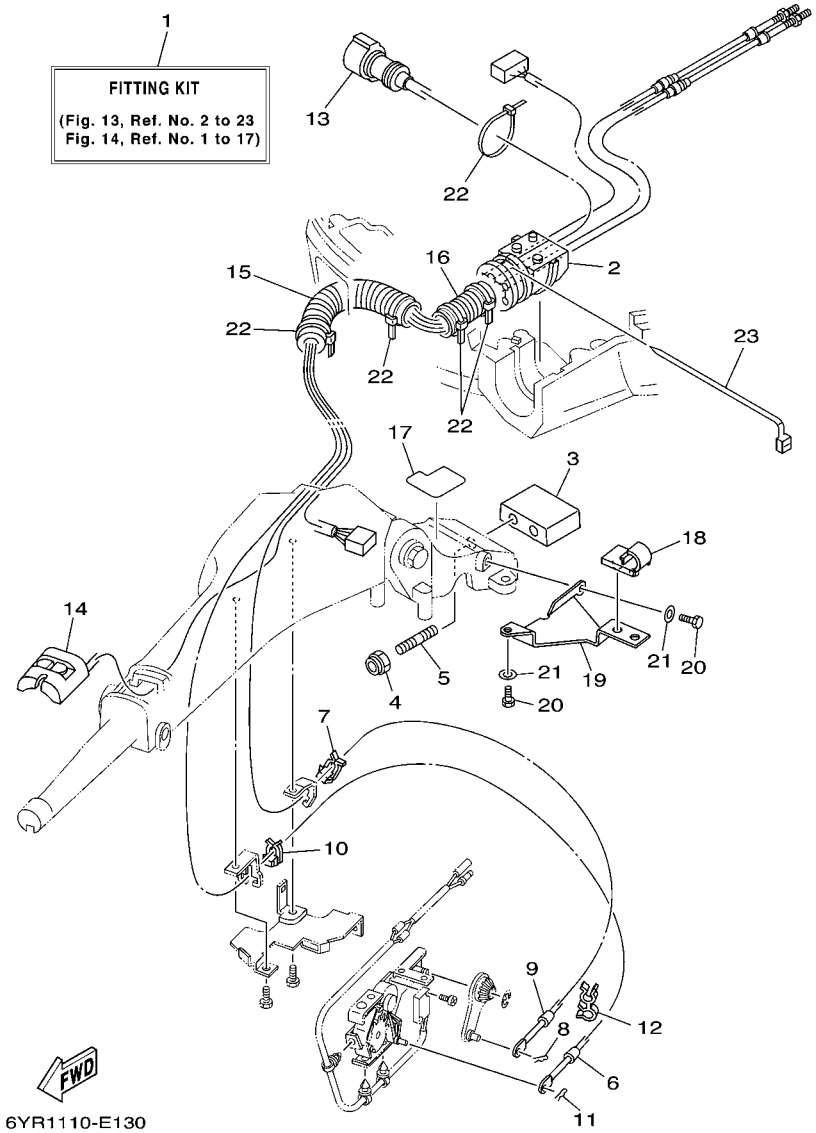

FIG. 13 TILLER HANDLE FITTING KIT F75 F90

REF. NO.	PART NO.	DESCRIPTION	USA					REMARKS
1	6X4–42102–10	FITTING KIT	1					LM
2	68V–42725–10	GROMMET	1					
3	6X4–42121–00–4D	BRACKET	1					
4	90185–10051	NUT, SELF-LOCKING	2					
5	90116–10031	BOLT, STUD	2					
6	67G–48321–20	CABLE	1					
7	63D–48538–00	CLAMP, CABLE 1	1					
8	90468–10005	CLIP	1					
9	67G–26301–10	THROTTLE CABLE ASSY	1					
10	63D–48538–00	CLAMP, CABLE 1	1					
11	90468–10005	CLIP	1					
12	90464–09M42	CLAMP	1					
13	6X4–82586–20	EXT., WIRE HARNESS (L: 1.25M)	1					
14	6X4–81860–00	SWITCH ASSY	1					
15	90447–22007	HOSE, WITH SPRING	1					
16	6K3–83557–00	TUBE	1					
17	6X4–42735–00	PROTECTOR	1					
18	63D–24367–00	CLAMP, FUEL PIPE 2	1					
19	6X4–24364–00	STAY	1					
20	97095–06016	BOLT	2					
21	92995–06600	WASHER	2					
22	90465–13M24	CLAMP	5					
23	90465–13M30	CLAMP	1					

FIG. 14 TILLER HANDLE STEERING FRICTION F75 F90 F115

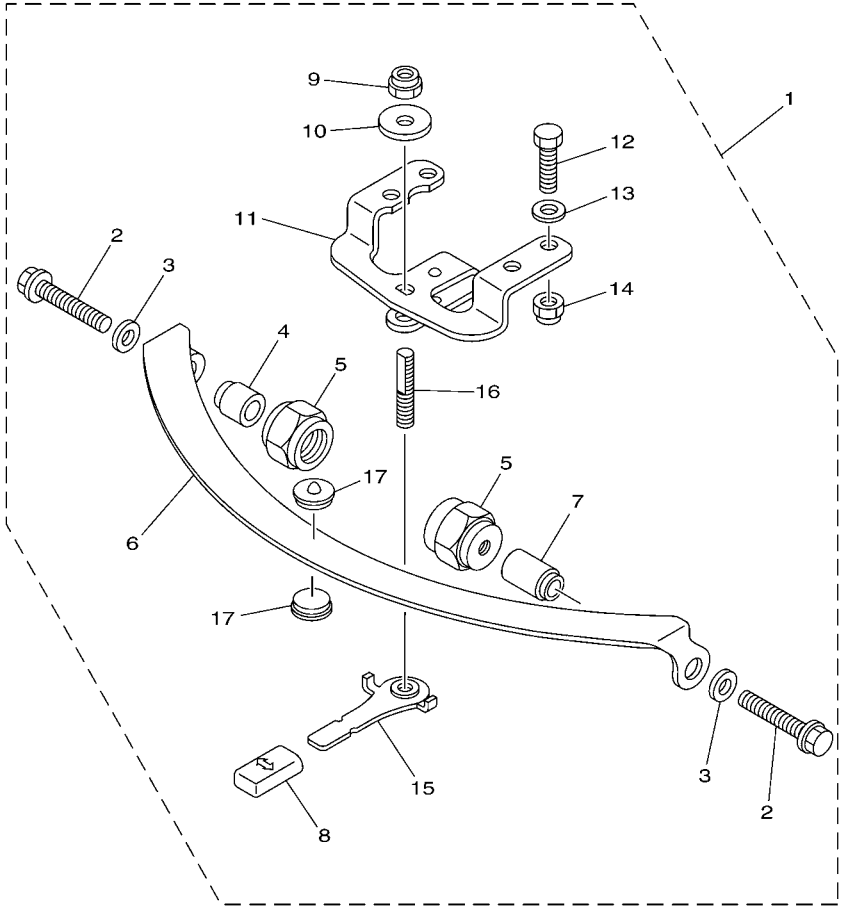

6X41110-E050

REF. NO.	PART NO.	DESCRIPTION	USA					REMARKS
1	67G–42508–10	STEERING FRICTION ASSY	1					
2	90119–08M74	.BOLT, WITH WASHER	2					
3	90201–08M01	.WASHER, PLATE	2					
4	67G–42541–00	.PIPE 1	1					
5	67G–42546–00	.NUT	2					
6	63D–42527–00	.PLATE, FRICTION	1					
7	67G–42541–10	.PIPE 1	1					
8	682–43318–01	.COVER	1					
9	90185–10M14	.NUT, SELF-LOCKING	1					
10	90201–10M76	.WASHER, PLATE	1					
11	6X4–42526–00	.PLATE, FRICTION	1					
12	97095–08025	.BOLT	2					
13	92995–08600	.WASHER	2					
14	90185–08057	.NUT, SELF-LOCKING	2					
15	67G–42561–00	.KNOB, STEERING LOCK	1					
16	67G–42562–00	.SHAFT, STEERING LOCK	1					
17	63D–42528–00	.PLATE, FRICTION	2					

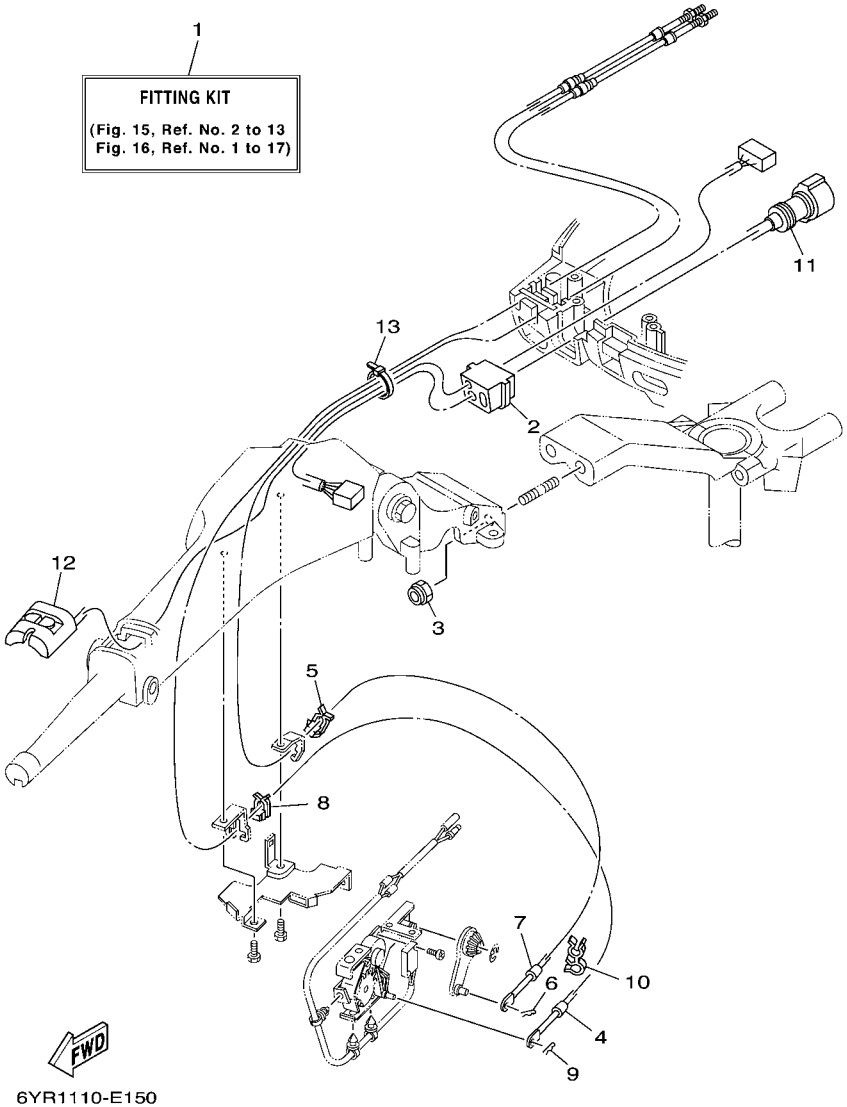

FIG. 15 TILLER HANDLE FITTING KIT F/T50 F/T60

REF. NO.	PART NO.	DESCRIPTION	USA					REMARKS
1	6X4–42102–20	FITTING KIT	1					LM
2	6C5–42725–30	GROMMET	1					
3	90185–10051	NUT, SELF-LOCKING	2					
4	67C–48321–10	CABLE	1					
5	63D–48538–00	CLAMP, CABLE 1	1					
6	90468–10005	CLIP	1					
7	69W–26301–00	THROTTLE CABLE ASSY	1					
8	63D–48538–00	CLAMP, CABLE 1	1					
9	90468–10005	CLIP	1					
10	90464–09M42	CLAMP	1					
11	6X4–82586–10	EXT., WIRE HARNESS (L: 950MM)	1					
12	6X4–81860–00	SWITCH ASSY	1					
13	90465–13M36	CLAMP	1					

FIG. 16 TILLER HANDLE STEERING FRICTION F/T50 F/T60

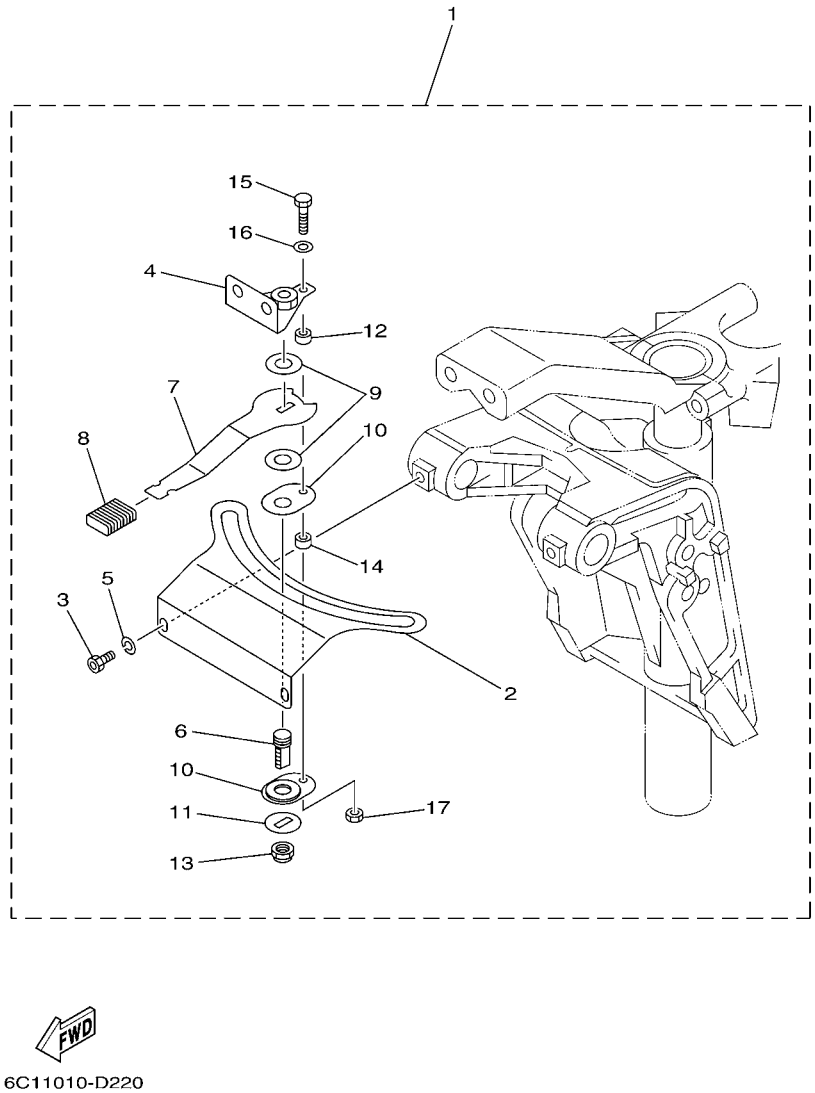

REF. NO.	PART NO.	DESCRIPTION	USA					REMARKS
1	6C5–42508–00	STEERING FRICTION ASSY	1					
2	6C5–42527–00	.PLATE, FRICTION	1					
3	90109–06M88	.BOLT	2					
4	67C–42525–00	.PLATE, FRICTION	1					
5	92990–06100	.WASHER, SPRING	2					
6	67C–42562–00	.SHAFT, STEERING LOCK	1					
7	67C–42561–00	.KNOB, STEERING LOCK	1					
8	689–43633–00	.COVER, TILT LEVER	1					
9	90202–10M56	.WASHER, PLATE	2					
10	65W–42528–00	.PLATE, FRICTION	2					
11	90209–10M26	.WASHER	1					
12	90387–05M05	.COLLAR	1					
13	90185–10M14	.NUT, SELF-LOCKING	1					
14	90387–05M11	.COLLAR	1					
15	97095–05020	.BOLT	1					
16	92995–05600	.WASHER	1					
17	95380–05600	.NUT	1					

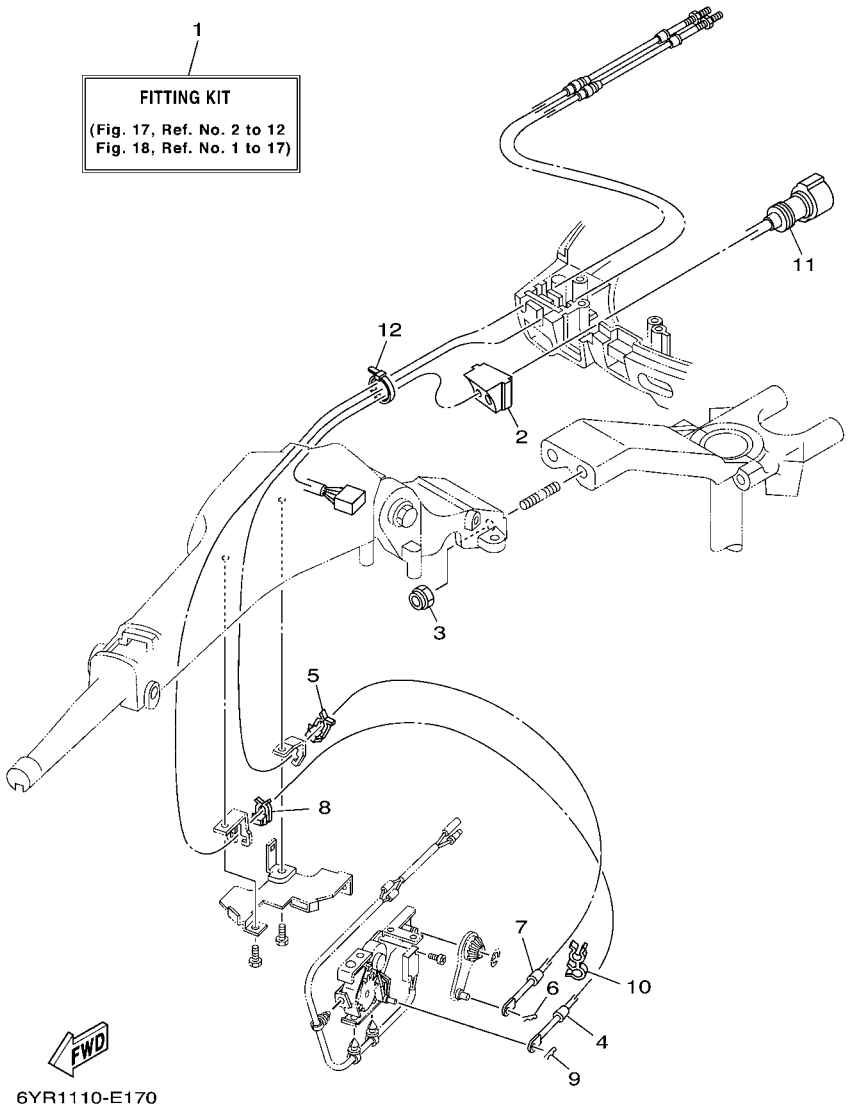

FIG. 17 TILLER HANDLE FITTING KIT F40

REF. NO.	PART NO.	DESCRIPTION	USA					REMARKS
1	6X4–42102–30	FITTING KIT	1					LM
2	62Y–42725–30	GROMMET	1					
3	90185–10051	NUT, SELF-LOCKING	2					
4	67C–48321–10	CABLE	1					
5	63D–48538–00	CLAMP, CABLE 1	1					
6	90468–10005	CLIP	1					
7	69W–26301–00	THROTTLE CABLE ASSY	1					
8	63D–48538–00	CLAMP, CABLE 1	1					
9	90468–10005	CLIP	1					
10	90464–09M42	CLAMP	1					
11	6X4–82586–00	EXT., WIRE HARNESS (L: 700MM)	1					
12	90465–13M36	CLAMP	1					

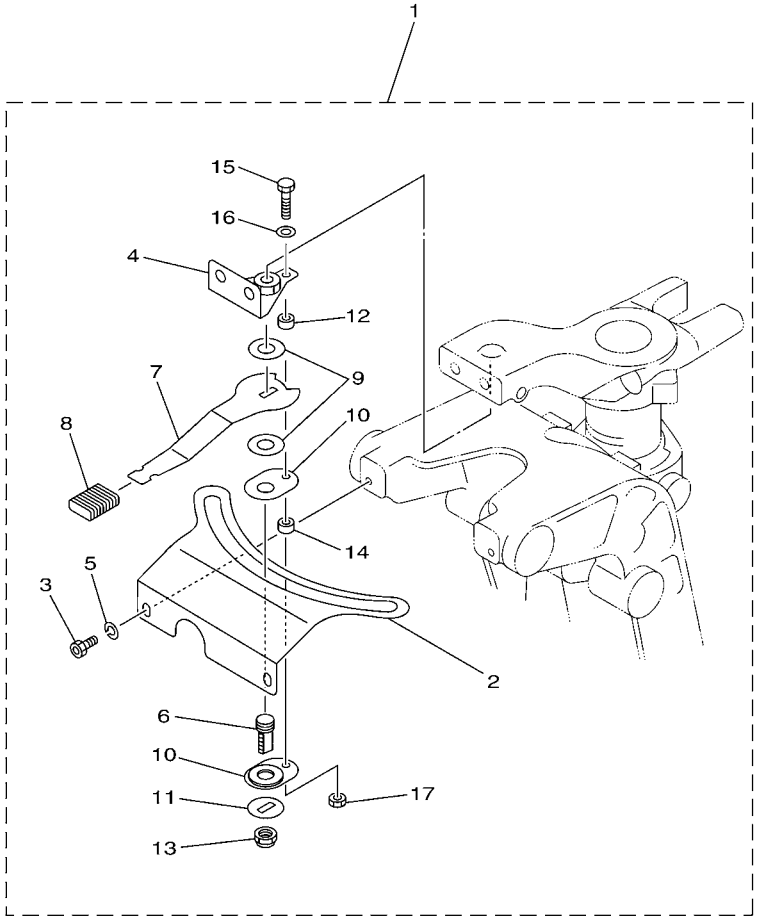

67C3100-C200

FIG. 18 TILLER HANDLE STEERING FRICTION F40

REF. NO.	PART NO.	DESCRIPTION	USA					REMARKS
1	67C–42508–03	STEERING FRICTION ASSY	1					
2	67C–42527–03	.PLATE, FRICTION	1					
3	90109–06M88	.BOLT	2					
4	67C–42525–00	.PLATE, FRICTION	1					
5	92990–06100	.WASHER, SPRING	2					
6	67C–42562–00	.SHAFT, STEERING LOCK	1					
7	67C–42561–00	.KNOB, STEERING LOCK	1					
8	689–43633–00	.COVER, TILT LEVER	1					
9	90202–10M56	.WASHER, PLATE	2					
10	65W–42528–00	.PLATE, FRICTION	2					
11	90209–10M26	.WASHER	1					
12	90387–05M05	.COLLAR	1					
13	90185–10M14	.NUT, SELF-LOCKING	1					
14	90387–05M11	.COLLAR	1					
15	97095–05020	.BOLT	1					
16	92995–05600	.WASHER	1					
17	95380–05600	.NUT	1					

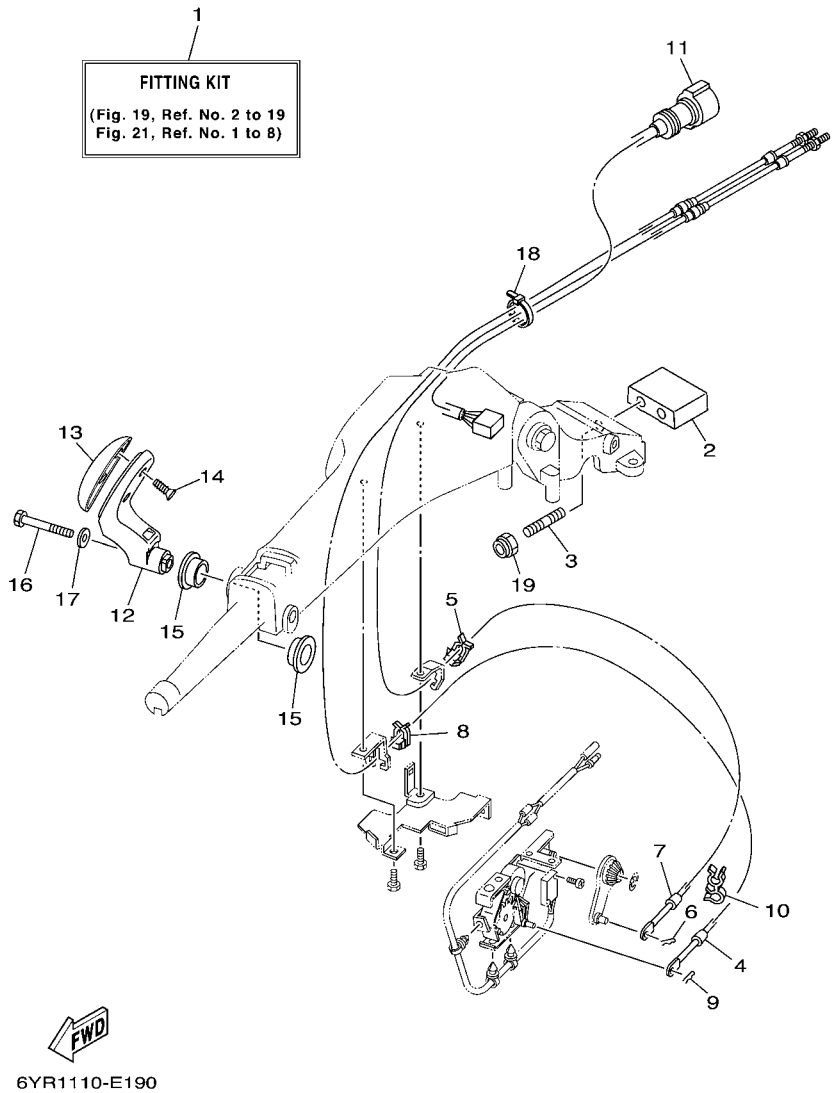

FIG. 19 TILLER HANDLE FITTING KIT 90

REF. NO.	PART NO.	DESCRIPTION	USA					REMARKS
1	6X4–42102–40	FITTING KIT	1					LM
2	6X4–42121–00–4D	BRACKET	1					
3	90116–10031	BOLT, STUD	2					
4	6H1–48321–10	CABLE	1					
5	63D–48538–00	CLAMP, CABLE 1	1					
6	90468–10005	CLIP	1					
7	6H1–26301–01	THROTTLE CABLE ASSY	1					
8	63D–48538–00	CLAMP, CABLE 1	1					
9	90468–10005	CLIP	1					
10	90464–09M42	CLAMP	1					
11	6X4–82586–30	EXTENSION, WIRE HARNESS	1					
12	6X4–44159–10–4D	HANDLE, GEAR SHIFT	1					
13	6X4–44173–00	LEVER, SHIFT CONTROL	1					
14	97780–60920	SCREW, TAPPING	2					
15	90386–26MA3	BUSH	1					
16	97095–08040	BOLT	1					
17	92995–08600	WASHER	1					
18	90465–13M36	CLAMP	1					
19	90185–10051	NUT, SELF-LOCKING	2					

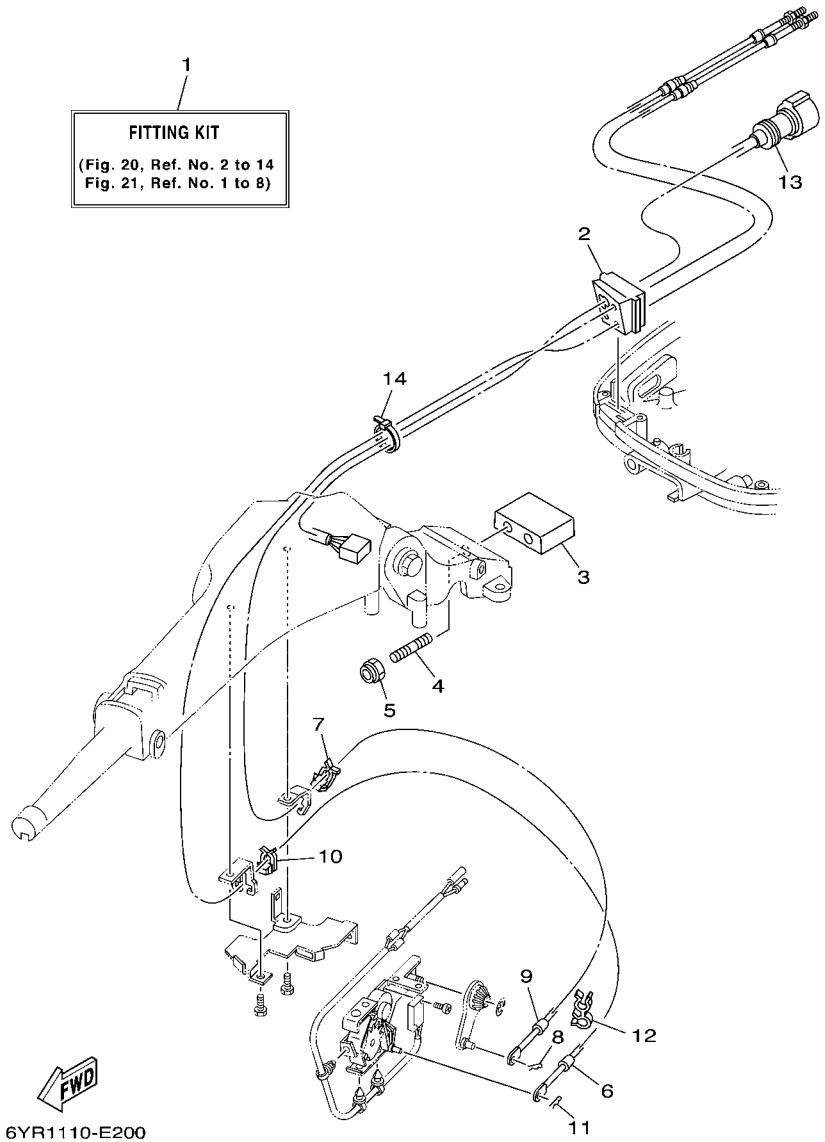

FIG. 20 TILLER HANDLE FITTING KIT 70

REF. NO.	PART NO.	DESCRIPTION	USA					REMARKS
1	6X4–42102–50	FITTING KIT	1					LM
2	6H3–42725–30	GROMMET	1					
3	6X4–42121–00–4D	BRACKET	1					
4	90116–10031	BOLT, STUD	2					
5	90185–10051	NUT, SELF-LOCKING	2					
6	6H3–48321–10	CABLE	1					
7	63D–48538–00	CLAMP, CABLE 1	1					
8	90468–10005	CLIP	1					
9	6H3–26301–01	THROTTLE CABLE ASSY	1					
10	63D–48538–00	CLAMP, CABLE 1	1					
11	90468–10005	CLIP	1					
12	90464–09M42	CLAMP	1					
13	6X4–82586–30	EXTENSION, WIRE HARNESS	1					
14	90465–13M36	CLAMP	1					

FIG. 21 TILLER HANDLE STEERING FRICTION 70 90

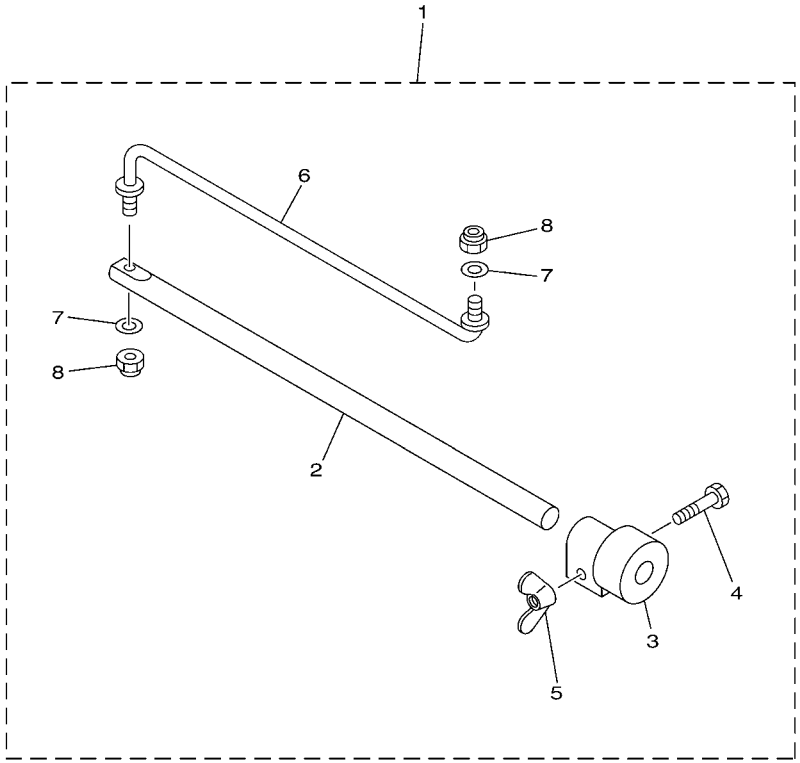

6X41110-E120

REF. NO.	PART NO.	DESCRIPTION	USA					REMARKS
1	692–42508–01	STEERING FRICTION ASSY	1					
2	663–42518–00	.SHAFT, FRICTION	1					
3	663–42528–00	.PLATE, FRICTION	1					
4	97080–06035	.BOLT	1					
5	90175–06003	.NUT, WING	1					
6	692–42515–01	.ROD, STEERING LINK	1					
7	92990–08600	.WASHER, PLATE	2					
8	90185–08057	.NUT, SELF-LOCKING	2					

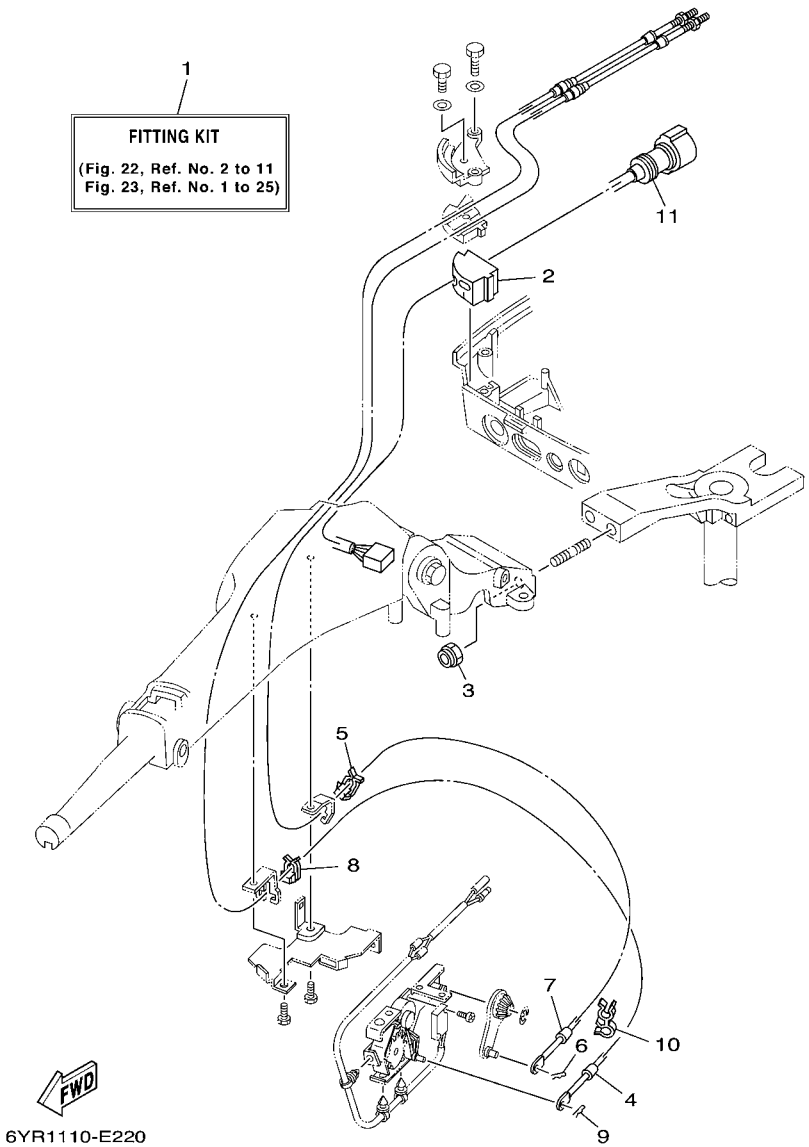

FIG. 22 TILLER HANDLE FITTING KIT 50

REF. NO.	PART NO.	DESCRIPTION	USA					REMARKS
1	6X4–42102–60	FITTING KIT	1					LM
2	6H4–42724–20	GROMMET	1					
3	90185–10051	NUT, SELF-LOCKING	2					
4	63D–48321–10	CABLE	1					
5	63D–48538–00	CLAMP, CABLE 1	1					
6	90468–10005	CLIP	1					
7	63D–26301–01	THROTTLE CABLE ASSY	1					
8	63D–48538–00	CLAMP, CABLE 1	1					
9	90468–10005	CLIP	1					
10	90464–09M42	CLAMP	1					
11	6X4–82586–00	EXT., WIRE HARNESS (L: 700MM)	1					

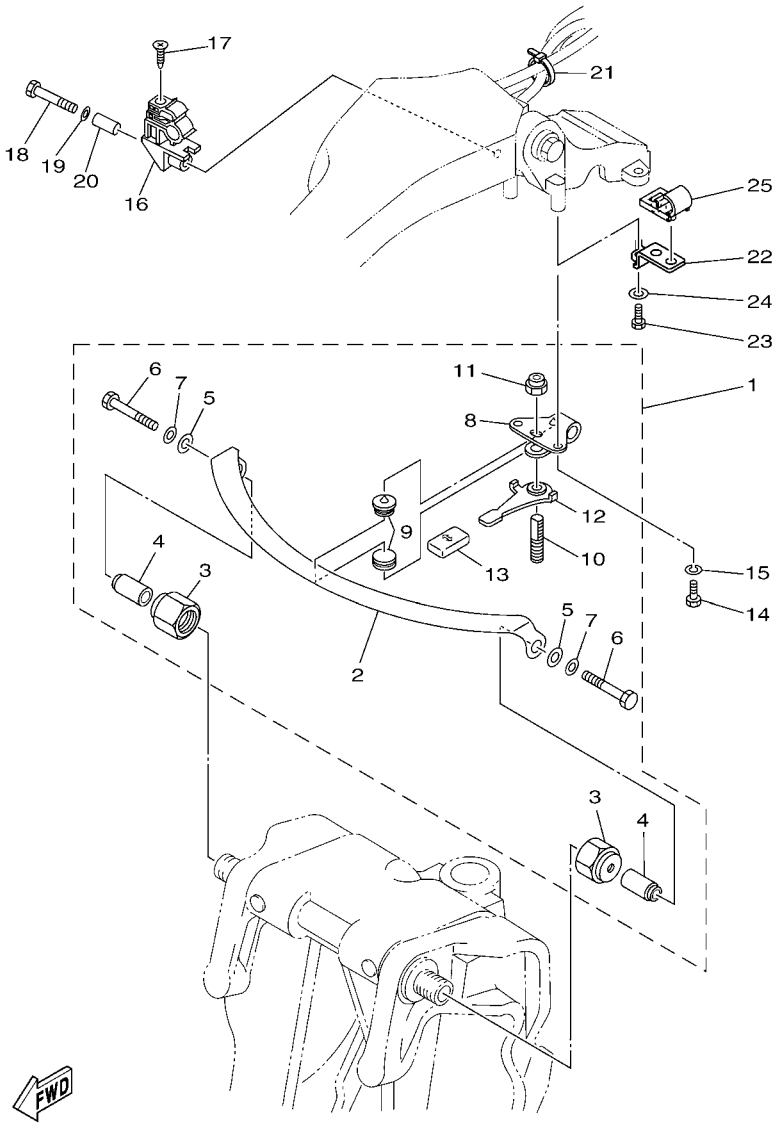

62XA100-E180

FIG. 23 TILLER HANDLE STEERING FRICTION 50

REF. NO.	PART NO.	DESCRIPTION	USA					REMARKS
1	63D–42508–00	STEERING FRICTION ASSY	1					
2	63D–42527–00	.PLATE, FRICTION	1					
3	63D–42546–00	.NUT	2					
4	63D–42541–00	.PIPE 1	2					
5	90201–08M01	.WASHER, PLATE	2					
6	97095–08050	.BOLT	2					
7	92990–08600	.WASHER, PLATE	2					
8	63D–42526–00	.PLATE, FRICTION	1					
9	63D–42528–00	.PLATE, FRICTION	2					
10	63D–42562–00	.SHAFT, STEERING LOCK	1					
11	90185–10M01	.NUT, SELF-LOCKING	1					
12	63D–42561–00	.KNOB, STEERING LOCK	1					
13	682–43318–01	.COVER	1					
14	97095–06016	BOLT	2					
15	92995–06100	WASHER, SPRING	2					
16	63D–82361–00	CLAMP, CORD	1					
17	90161–06M00	SCREW, TAPPING	1					
18	97095–06035	BOLT	1					
19	92995–06600	WASHER	1					
20	90387–06M26	COLLAR	1					
21	90465–13M36	CLAMP	1					
22	63D–24364–10	STAY	1					
23	97095–06016	BOLT	1					
24	92995–06600	WASHER	1					
25	63D–24367–00	CLAMP, FUEL PIPE 2	1					

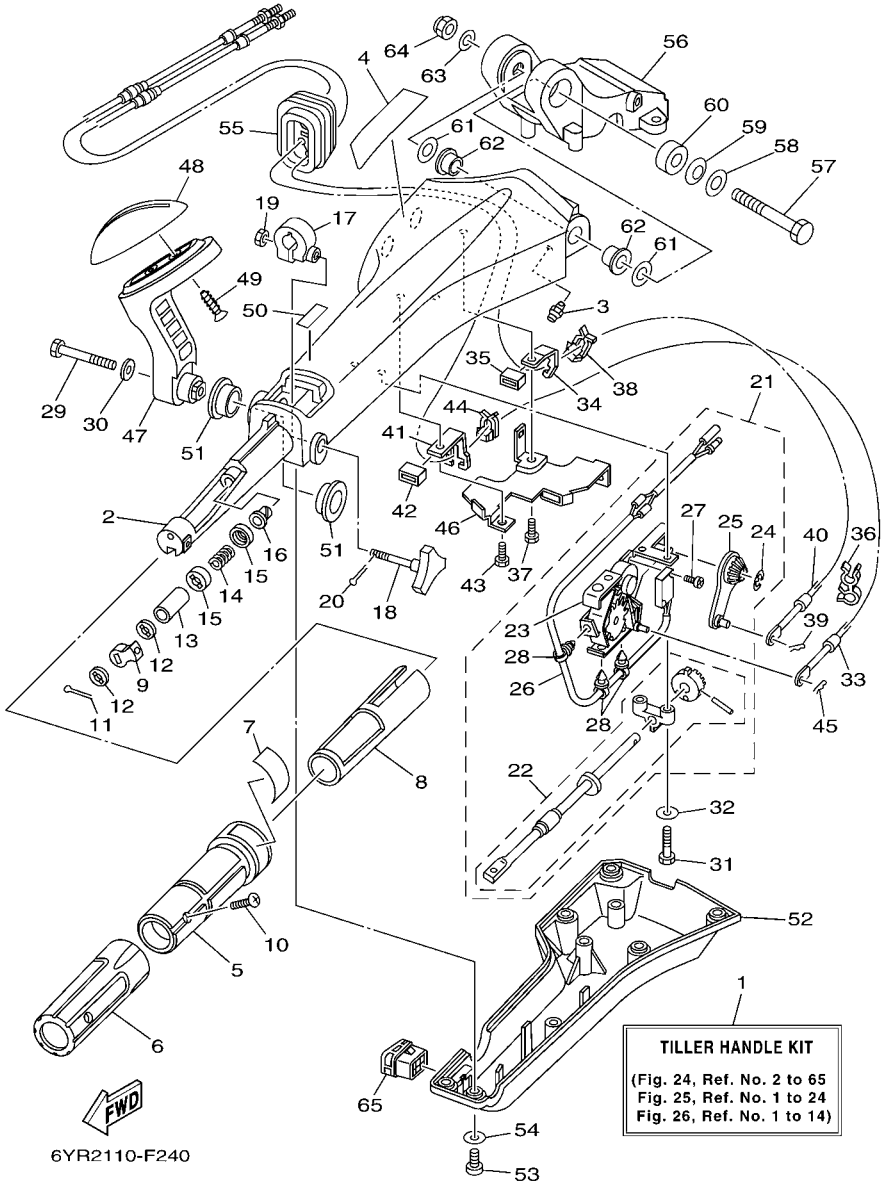

FIG. 24 TILLER HANDLE F25 COMPLETE 1

REF. NO.	PART NO.	DESCRIPTION	USA					REMARKS
1	6X4–42103–01	TILLER HANDLE KIT	1					LM
2	6X4–42111–01–4D	HANDLE, STEERING	1					
3	93700–06M03	NIPPLE, GREASE	1					
4	6X4–48215–00	GRAPHIC	1					
5	6X4–42119–00	GRIP, STEERING HANDLE	1					
6	6X4–42177–00	RUBBER, HANDLE	1					
7	6X4–42137–00	INDICATOR, THROTTLE	1					
8	6X4–41291–00	BUSHING	1					
9	6X4–44139–00	COLLAR	1					
10	90142–05001	SCREW, COUNTERSUNK	1					
11	91490–20010	PIN, COTTER	1					
12	6X4–44177–00	WASHER	2					
13	6X4–42128–00	COLLAR, DISTANCE 1	1					
14	90501–23215	SPRING, COMPRESSION	1					
15	6X4–44188–00	WASHER	2					
16	90386–08032	BUSH	1					
17	63D–42126–00	FRICTION, STEERING HANDLE GRIP	1					
18	6X4–48154–00	KNOB, THROTTLE	1					
19	95380–06600	NUT, HEXAGON	1					
20	91490–20010	PIN, COTTER	1					
21	6X4–44100–00	SHIFT LINK ASSY	1					
22	6X4–42115–00	.SHAFT, STEERING HANDLE	1					
23	6X4–44102–00	.SHIFT ASSIST ASSY.	1					
24	6X4–14137–00	.CLIP	1					
25	6X4–48261–00	.ARM, THROTTLE	1					
26	6X4–82540–00	.NEUTRAL SWITCH ASSY	1					
27	6A5–48129–10	.SCREW 3	2					

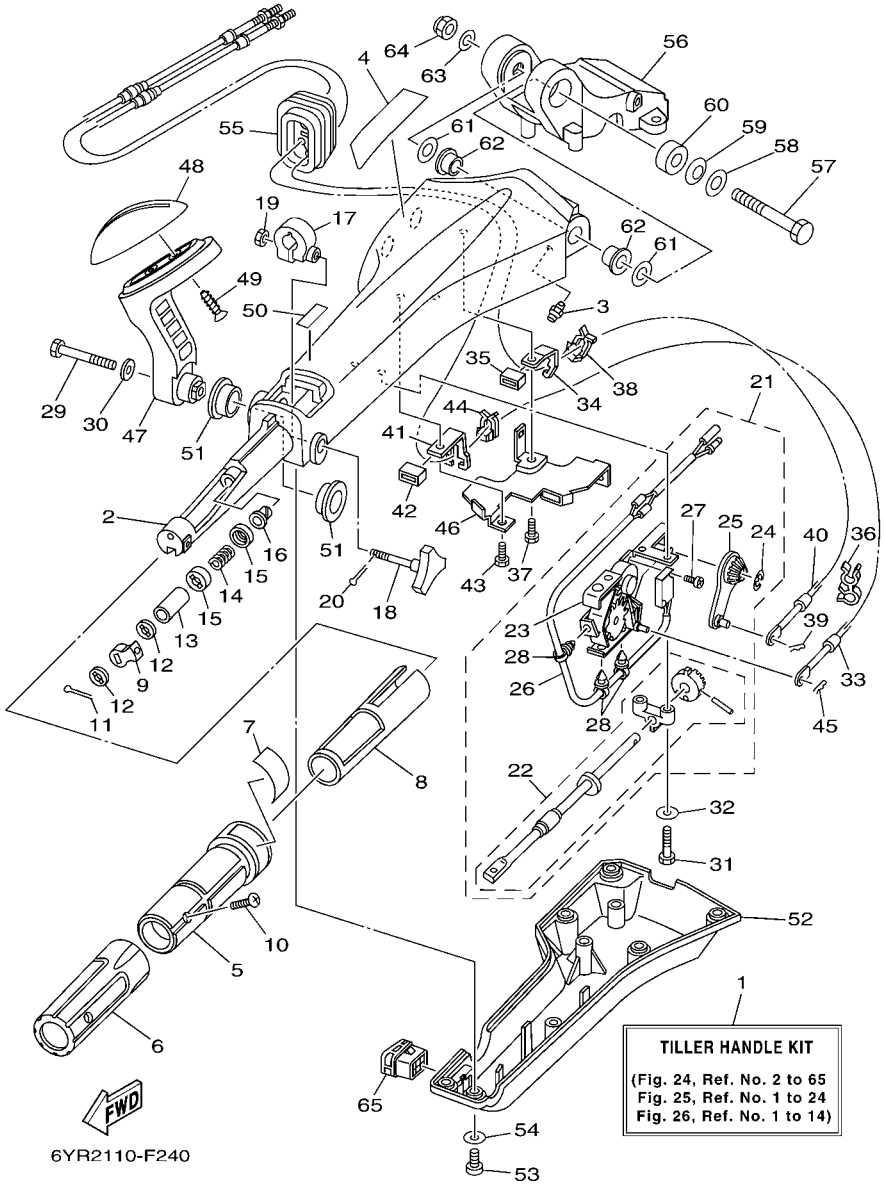

FIG. 24 TILLER HANDLE F25 COMPLETE 1

REF. NO.	PART NO.	DESCRIPTION	USA					REMARKS
28	6X4–42821–00	.BAND, CLAMP	3					
29	97095–08040	BOLT	1					
30	92995–08600	WASHER	1					
31	97095–06030	BOLT	2					
32	92995–06600	WASHER	2					
33	6H1–48321–20	CABLE	1					
34	6X4–48538–00	CLAMP, CABLE 1	1					
35	6X4–26367–00	PROTECTOR	1					
36	90464–09M42	CLAMP	1					
37	97095–06014	BOLT	1					
38	63D–48538–00	CLAMP, CABLE 1	1					
39	90468–10005	CLIP	1					
40	6H3–48321–02	CABLE	1					
41	6X4–48538–10	CLAMP, CABLE 1	1					
42	6X4–26367–00	PROTECTOR	1					
43	97095–06014	BOLT	1					
44	63D–48538–00	CLAMP, CABLE 1	1					
45	90468–10005	CLIP	1					
46	6X4–42159–00	STAY	1					
47	6X4–44159–00–4D	HANDLE, GEAR SHIFT	1					
48	6X4–44173–00	LEVER, SHIFT CONTROL	1					
49	97780–60920	SCREW, TAPPING	2					
50	6G8–44191–00	INDICATOR, SHIFT	1					
51	90386–26MA3	BUSH	2					
52	6X4–42131–01	COVER, HANDLE STEERING	1					
53	97885–06016	SCREW, PAN HEAD	6					
54	92995–06600	WASHER	6					

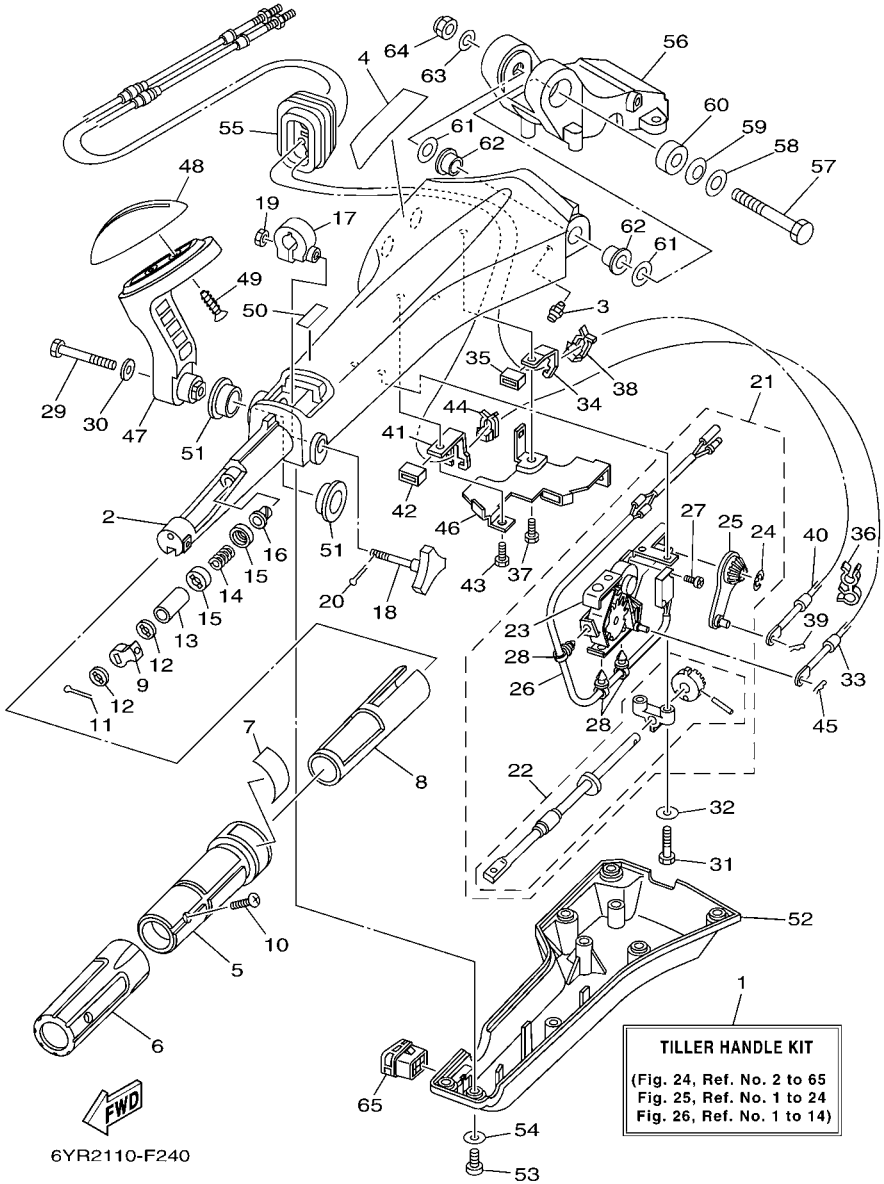

FIG. 24 TILLER HANDLE F25 COMPLETE 1

REF. NO.	PART NO.	DESCRIPTION	USA					REMARKS
55	6X4–42725–00	GROMMET	1					
56	65W–42121–11–4D	BRACKET	1					
57	90101–12014	BOLT	1					
58	92990–12200	WASHER, PLAIN	1					
59	90206–12M22	WASHER, WAVE	1					
60	90387–12M02	COLLAR	1					
61	90201–12035	WASHER, PLATE	2					
62	90386–12003	BUSH	2					
63	92990–12600	WASHER, PLATE	1					
64	90185–12M12	NUT, SELF-LOCKING	1					
65	6X4–42728–10	CAP	1					

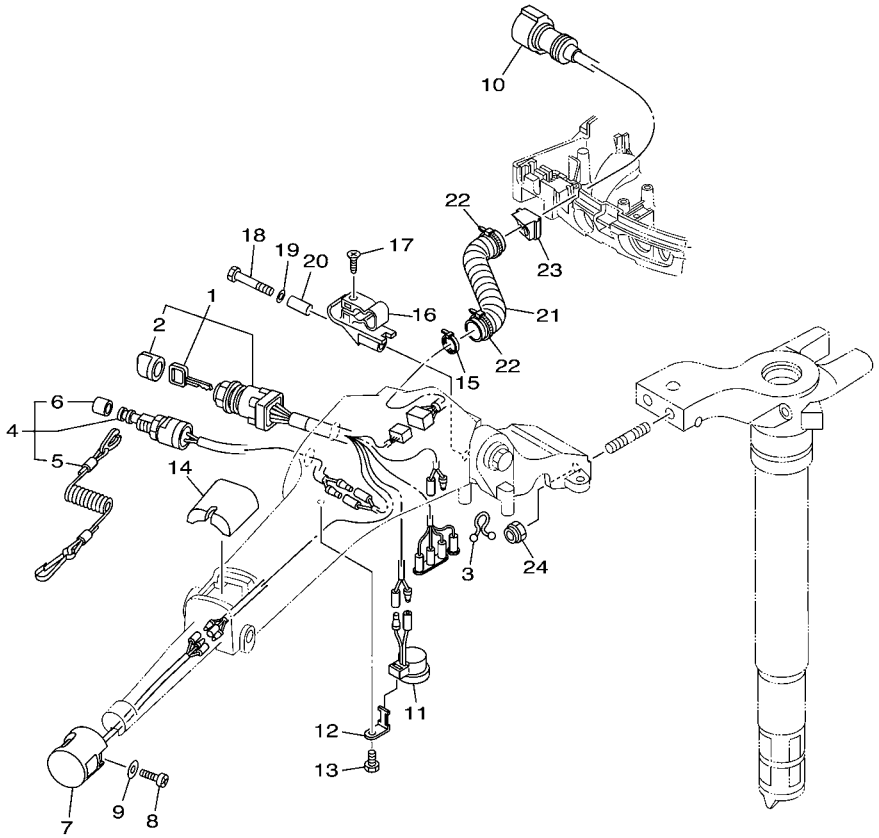

6YR2110-F250

FIG. 25 TILLER HANDLE F25 COMPLETE 2

REF. NO.	PART NO.	DESCRIPTION	USA					REMARKS
1	6X4–82510–00	MAIN SWITCH ASSY	1					
2	676–82577–00	.CAP, KEY	1					
3	90464–08M07	CLAMP	1					
4	69W–82575–00	ENGINE STOP SWITCH ASSY	1					
5	682–82556–00	.LANYARD, STOP SWITCH	1					
6	689–8257Y–00	.CAP	1					
7	6X4–82563–00	TRIM & TILT SWITCH ASSY	1					
8	97880–06016	SCREW, PAN HEAD	1					
9	92990–06600	WASHER, PLATE	1					
10	6X4–82586–10	EXT., WIRE HARNESS (L: 950MM)	1					
11	6X4–83383–00	BUZZER	1					
12	6X4–83386–00	STAY, BUZZER	1					
13	97095–06014	BOLT	1					
14	6X4–81942–00	COVER	1					
15	90465–13M36	CLAMP	1					
16	62Y–82361–00	CLAMP, CORD	1					
17	90161–06M03	SCREW, TAPPING	1					
18	97095–06035	BOLT	1					
19	92995–06600	WASHER	1					
20	90387–06M26	COLLAR	1					
21	90447–22006	HOSE, WITH SPRING	1					
22	90465–13M24	CLAMP	2					
23	65W–42725–21	GROMMET	1					
24	90185–10051	NUT, SELF-LOCKING	2					

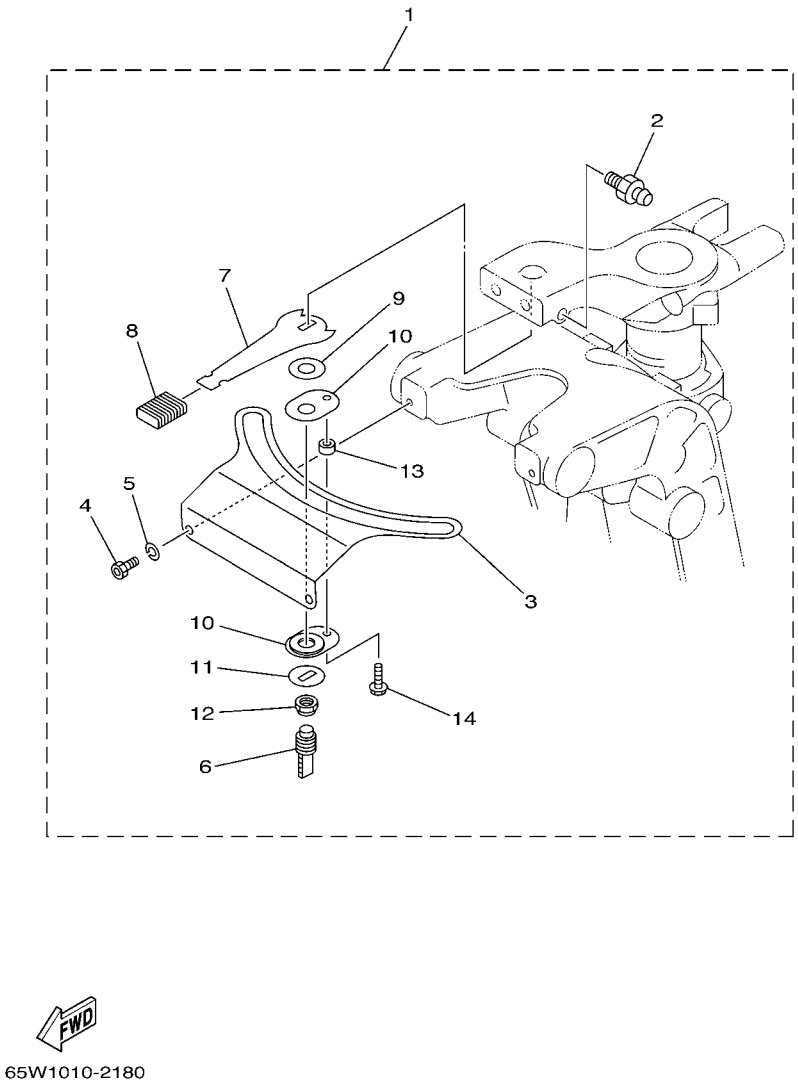

FIG. 26 TILLER HANDLE F25 COMPLETE 3

REF. NO.	PART NO.	DESCRIPTION	USA					REMARKS
1	65W–42508–00	STEERING FRICTION ASSY	1					
2	93700–06M03	.NIPPLE, GREASE	1					
3	65W–42527–00	.PLATE, FRICTION	1					
4	90109–06M50	.BOLT	2					
5	92990–06100	.WASHER, SPRING	2					
6	65W–42562–00	.SHAFT, STEERING LOCK	1					
7	65W–42561–00	.KNOB, STEERING LOCK	1					
8	689–43633–00	.COVER, TILT LEVER	1					
9	90202–10M56	.WASHER, PLATE	1					
10	65W–42528–00	.PLATE, FRICTION	2					
11	90209–10M26	.WASHER	1					
12	90185–10M14	.NUT, SELF-LOCKING	1					
13	90387–05M11	.COLLAR	1					
14	97595–05516	.BOLT, WITH WASHER	1					

***Boat LAN Gauge**
***Cooling water pressure sensor**
***Speed sensor**

Application Model

V6 (HPDI Series)		
MODEL CODE	MODEL NAME	SERIAL NO.
60X5	VZ250TR-2007	60X:1003854-
60Y5	VZ225TR-2007	60Y:1004590-
68F6	Z200TR-2007	6G6:1028945-
68G6	LZ200TR-2007	6K1:1005102-
68J7	VZ150TR-2007	6J9:1010914-
68M7	VZ175TR-2007	62H:1001299-
6C94	VZ300TR-2007	6C9:1001027-
6D04	Z300TR-2007	6D0:1003785-
6D14	LZ300TR-2007	6D1:1001809-
6P53	VZ200TR-2007	6P5:1002109-

4 Stroke Series		
MODEL CODE	MODEL NAME	SERIAL NO.
60L6	F200TR-2007	60L:1008346-
60M6	LF200TR-2007	60M:1001344-
63P4	F150TR-2007	63P:1049287-
64P4	LF150TR-2007	64P:1006749-
68V6	F115TR-2007	68V:1066827-
68W6	LF115TR-2007	68W:1002955-
69J6	F225TR-2007	69J:1027875-
69K6	LF225TR-2007	69K:1008434-
6C13	F50TR-2007	6C1:1012527-
6C23	T50TR-2007	6C2:1004629-
6C53	F60TR-2007	6C5:1016449-
6C63	T60TR-2007	6C6:1005083-
6D63	F75TR-2007	62P:1008069-
6D83	F90TR-2007	61P:1021936-
6P23	F250TR-2007	6P2:1011652-
6P33	LF250TR-2007	6P3:1005453-

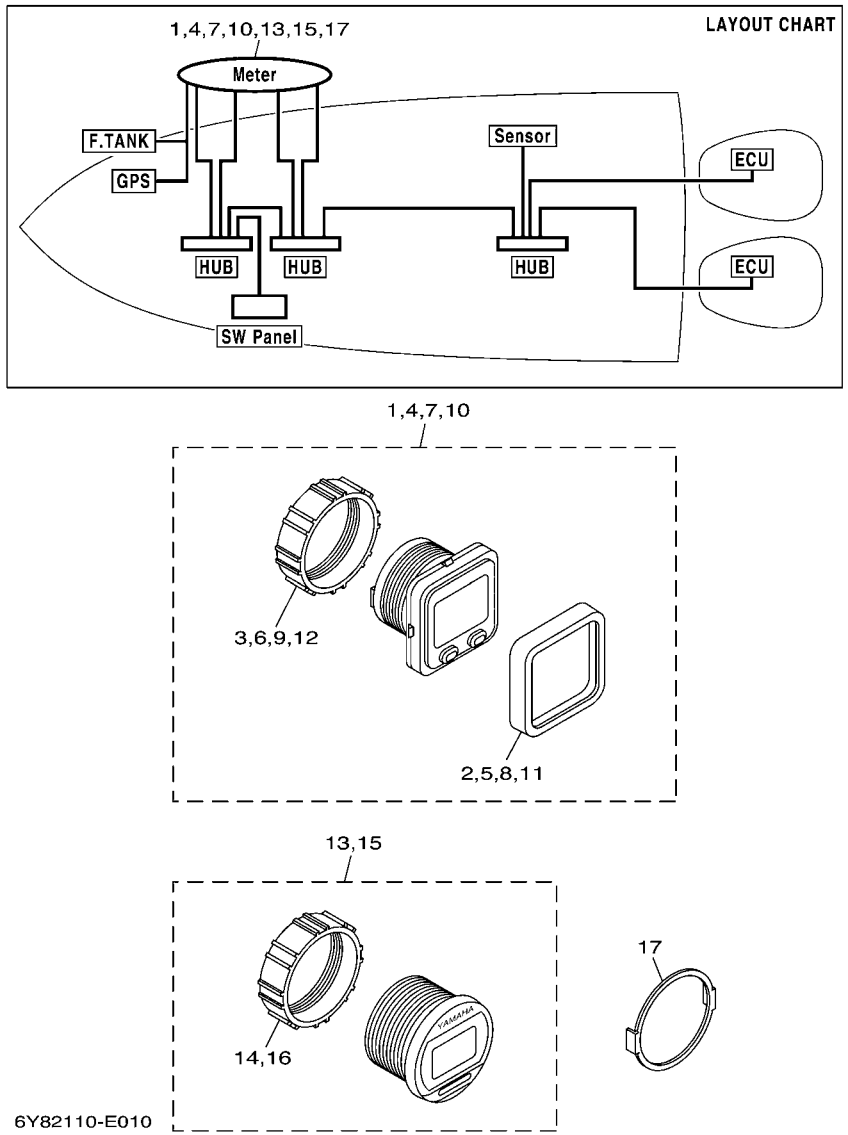

FIG. 27 COMMAND LINK INSTRUMENTS

REF. NO.	PART NO.	DESCRIPTION	USA					REMARKS
1	6Y8–8350T–01	TACHOMETER, SQ	1					
2	6Y8–83363–00	.BEZEL, SQUARE	1					
3	6Y8–84383–00	.NUT, RING	1					
4	6Y8–8350S–01	SPEEDOMETER, SQ	1					
5	6Y8–83363–00	.BEZEL, SQUARE	1					
6	6Y8–84383–00	.NUT, RING	1					
7	6Y8–8350F–01	FL MGT METER, SQ	1					FUEL MANAGEMENT
8	6Y8–83363–00	.BEZEL, SQUARE	1					
9	6Y8–84383–00	.NUT, RING	1					
10	6Y8–83500–01	S&FM METER, SQ	1					SPEED & FUEL
11	6Y8–83363–00	.BEZEL, SQUARE	1					
12	6Y8–84383–00	.NUT, RING	1					
13	6Y8–8350T–11	TACHOMETER, RD	1					
14	6Y8–84383–00	.NUT, RING	1					
15	6Y8–83500–11	S&FM METER, RD	1					SPEED & FUEL
16	6Y8–84383–00	.NUT, RING	1					
17	6Y8–83514–00	PLATE, FITTING	1					UN

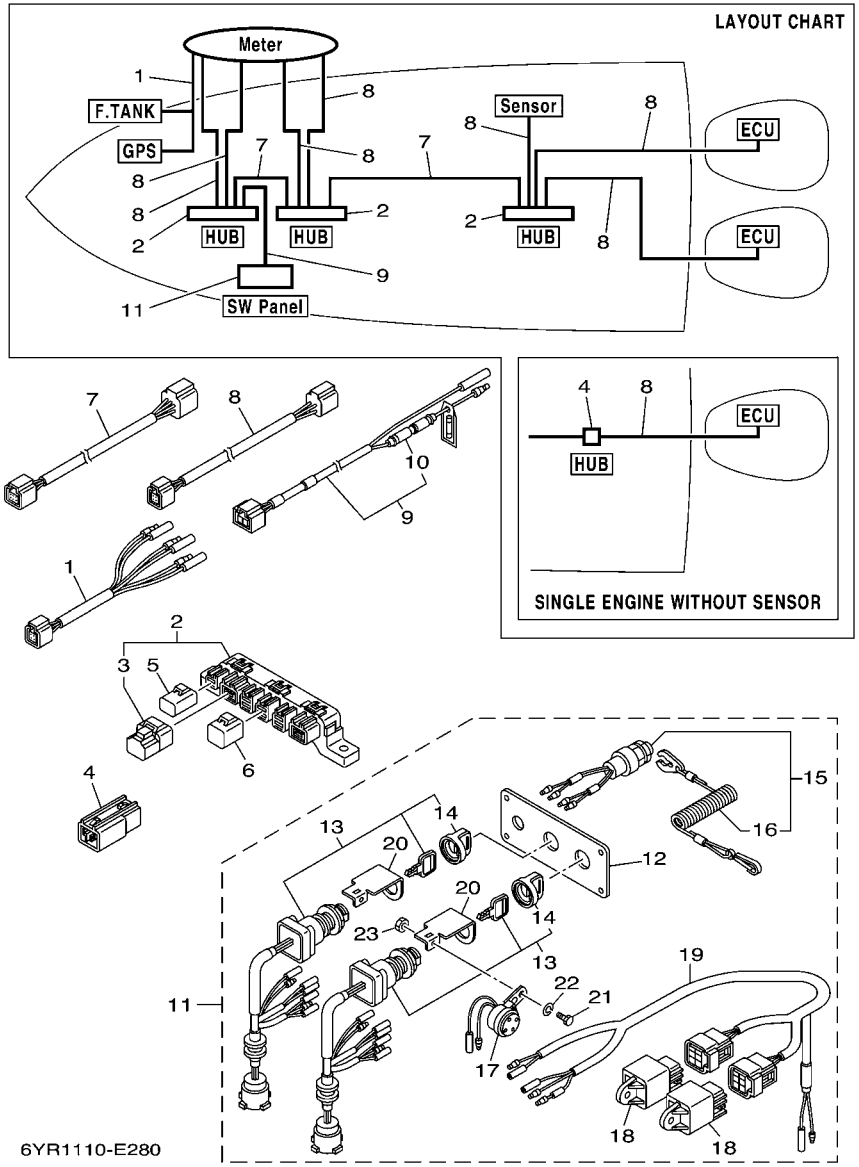

FIG. 28 COMMAND LINK ELECTRICAL 1

REF. NO.	PART NO.	DESCRIPTION	USA					REMARKS
1	6Y8–8356N–01	LEAD, FUEL TANK & GPS SENDER	1					
2	6Y8–81920–01	MULTI HUB ASSY	1					UN
3	6Y8–85371–01	.END OF LINE RESISTER	1					
4	6Y8–81920–11	IN-LINE HUB ASSY	1					
5	6Y8–82582–01	CAP 1 (2PIN)	1					UN
6	6Y8–82582–11	CAP 1 (4PIN)	1					UN
7	6Y8–82553–01	1FT MAIN BUS	1					UR
	6Y8–82553–11	15FT MAIN BUS	1					UR
	6Y8–82553–21	20FT MAIN BUS	1					UR
	6Y8–82553–31	25FT MAIN BUS	1					UR
	6Y8–82553–41	30FT MAIN BUS	1					UR
	6Y8–82553–50	10FT MAIN BUS	1					UR
8	6Y8–82521–01	1FT PIGTAIL BUS	1					UR
	6Y8–82521–11	2FT PIGTAIL BUS	1					UR
	6Y8–82521–21	3FT PIGTAIL BUS	1					UR
	6Y8–82521–31	6FT PIGTAIL BUS	1					UR
	6Y8–82521–41	9FT PIGTAIL BUS	1					UR
	6Y8–82521–51	12FT PIGTAIL BUS	1					UR
9	6Y8–83553–01	8FT POWER WIRE	1					
10	6G1–82151–00	.FUSE (10A)	1					
11	6Y8–82570–01	PANEL SW., TWIN	1					
12	6Y8–82571–01	.PLATE, PANEL SWITCH	1					
13	6Y8–82510–01	.MAIN SWITCH ASSY	2					
14	676–82577–00	..CAP, KEY	1					
15	6K1–82575–00	.ENGINE STOP SWITCH ASSY	1					
16	682–82556–00	..LANYARD, STOP SWITCH	1					
17	6R5–83383–00	.BUZZER	2					

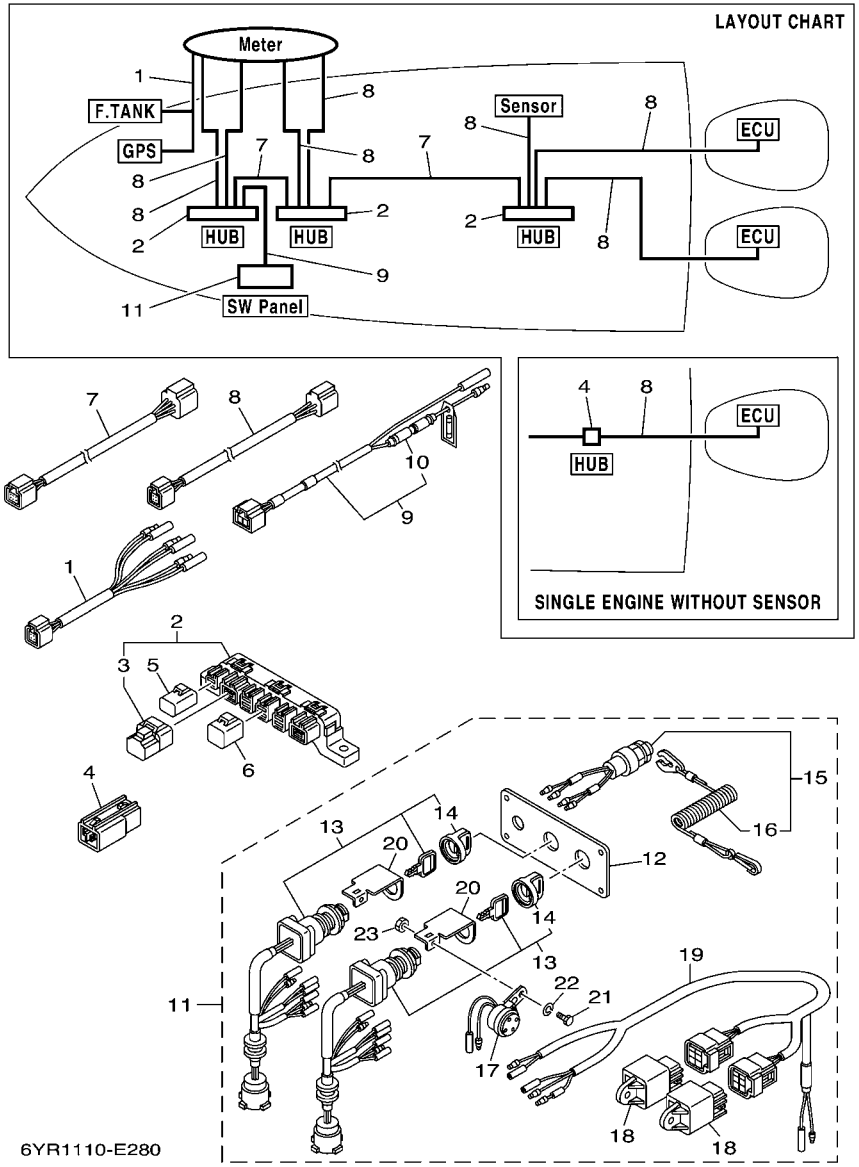

FIG. 28 COMMAND LINK ELECTRICAL 1

REF. NO.	PART NO.	DESCRIPTION	USA					REMARKS
18	68V–81950–00	.RELAY ASSY	2					
19	6Y8–82507–00	.LEAD, IGNITION SWITCH RELAY	1					
20	64D–82581–00	.STAY, CORD CLAMP	2					
21	97303–05012	.BOLT	2					
22	92903–05100	.WASHER, SPRING	2					
23	95303–05700	.NUT	2					

FIG. 29 COMMAND LINK ALTERNATE SENSORS 1

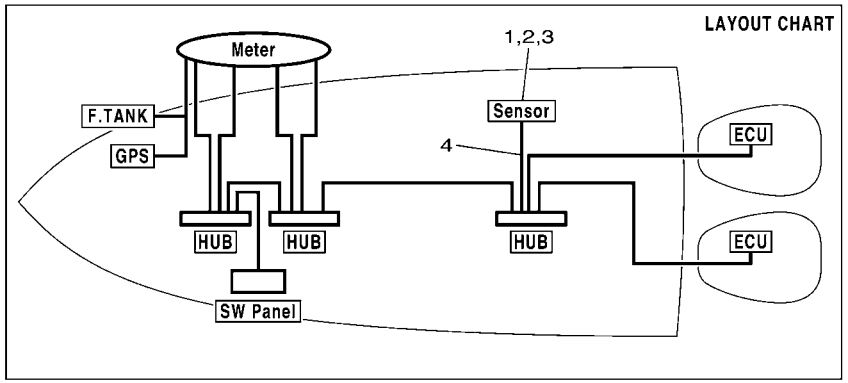

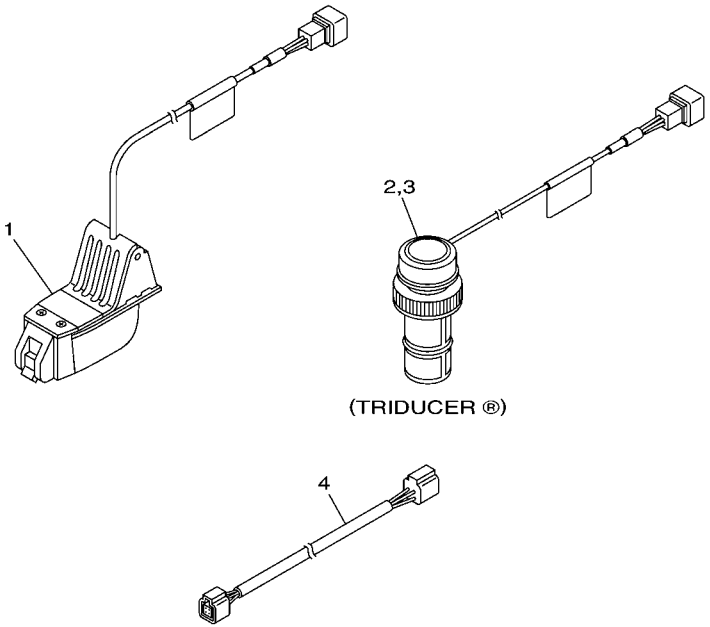

6Y82110-E031

REF. NO.	PART NO.	DESCRIPTION	USA					REMARKS
1	6Y8–83688–01	TRANSOM MOUNT TRIDUCER	1					
2	6Y8–83688–11	PLASTIC THRU-HULL TRIDUCER	1					
3	6Y8–83688–20	BRONZE THRU-HULL TRIDUCER	1					
4	6Y8–82521–01	1FT PIGTAIL BUS	1					UR
	6Y8–82521–11	2FT PIGTAIL BUS	1					UR
	6Y8–82521–21	3FT PIGTAIL BUS	1					UR
	6Y8–82521–31	6FT PIGTAIL BUS	1					UR
	6Y8–82521–41	9FT PIGTAIL BUS	1					UR
	6Y8–82521–51	12FT PIGTAIL BUS	1					UR

FIG. 30 COMMAND LINK ALTERNATE SENSORS 2

Cooling water pressure sensor

Models: F50, T50, F60, T60, F75, F90, (L)F115,
VZ150, VZ175, (L)Z200,
VZ200, VZ225, VZ250, (L)Z300, VZ300

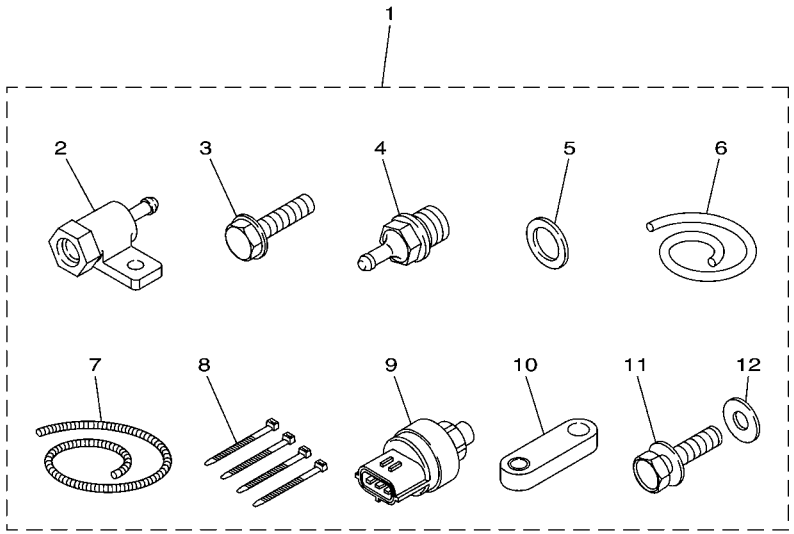

6YR2110-F300

REF. NO.	PART NO.	DESCRIPTION	USA					REMARKS
1	60V–8A4L0–01	WATER PRESSURE SENSOR KIT	1					
2	60V–8366D–00	.ADAPTOR, INPUT	1					
3	95895–06025	.BOLT, FLANGE	1					EXCEPT F50/T50/F60/T60
4	60V–83667–00	.SENDER, WATER PRESSURE	1					
5	90430–14115	.GASKET	1					
6	90445–07018	.HOSE (L: 1400MM)	1					
7	90447–07015	.HOSE, COVER (L: 1300MM)	1					
8	90465–11M10	.CLAMP	4					
9	6Y5–8366B–00	.SENSOR, WATER PRESSURE	1					
10	60V–8257V–00	.PLATE, CONNECTOR	1					HPDI MODELS
11	97095–06016	.BOLT	1					F50/T50/F60/T60
12	92995–06600	.WASHER	1					F50/T50/F60/T60

Cooling water pressure sensor

Models: (L)F150, (L)F200, (L)F225, (L)F250

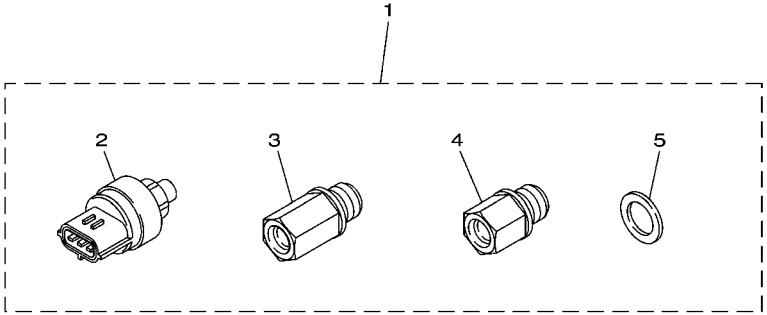

6Y82110-E050

FIG. 31 COMMAND LINK ALTERNATE SENSORS 3

REF. NO.	PART NO.	DESCRIPTION	USA					REMARKS
1	69J–8A4L0–00	WATER PRESSURE SENSOR KIT	1					
2	6Y5–8366B–00	.SENSOR, WATER PRESSURE	1					
3	69J–8366C–00	.ADAPTOR, INPUT	1					FOR (L)F200/(L)F225
4	63P–8366C–00	.ADAPTOR, INPUT	1					FOR (L)F150/(L)F225
5	90430–14115	.GASKET	1					

Speed sensor

All models

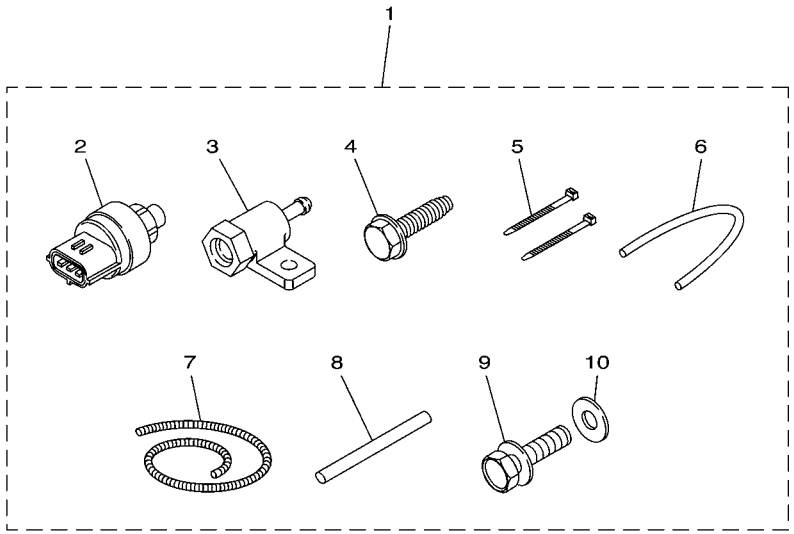

6Y82110-E060

FIG. 32 COMMAND LINK ALTERNATE SENSORS 4

REF. NO.	PART NO.	DESCRIPTION	USA					REMARKS
1	60V–8A4L1–01	SPEED SENSOR KIT	1					
2	6Y5–8366B–00	.SENSOR, WATER PRESSURE	1					
3	60V–8366D–00	.ADAPTOR, INPUT	1					
4	90109–06M81	.BOLT	1					
5	90465–11M10	.CLAMP	2					
6	90445–07017	.HOSE (L: 550MM)	1					
7	90447–07013	.HOSE, COVER (L: 700MM)	1					
8	60V–42629–00	.SEAL	1					
9	97095–06016	.BOLT	1					
10	92995–06600	.WASHER	1					

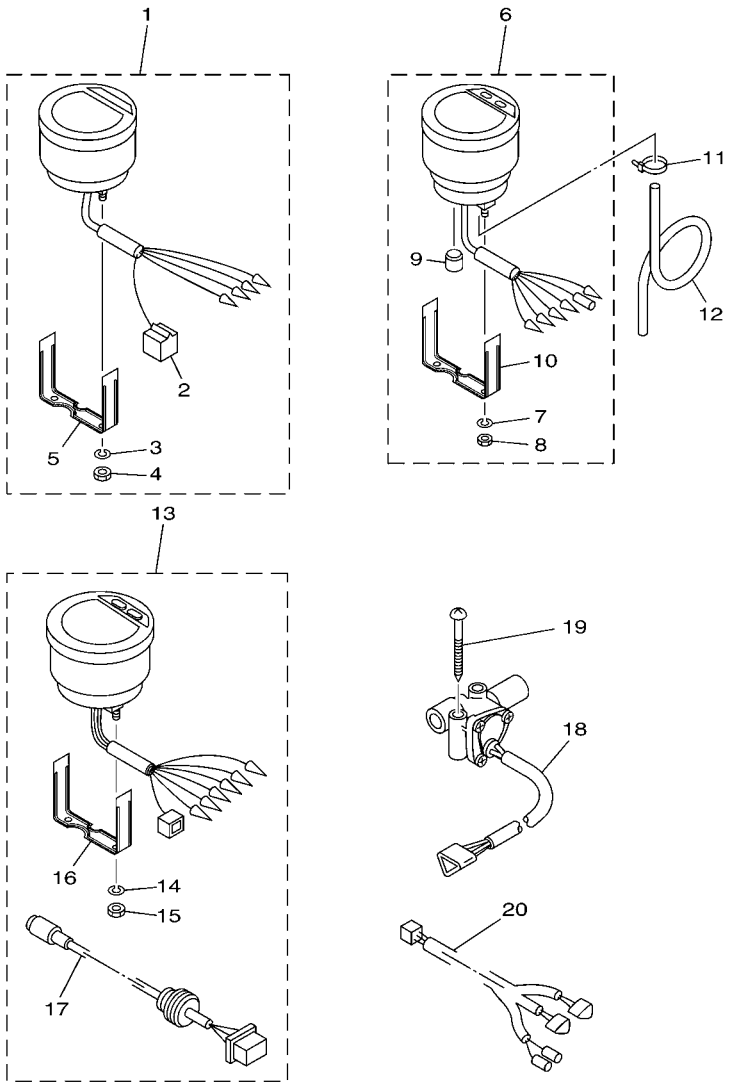

6YR2110-F330

FIG. 33 INSTRUMENTS DIGITAL

REF. NO.	PART NO.	DESCRIPTION	USA					REMARKS
1	6Y5–8350T–90	DIGITAL TACHOMETER ASSY	1					
2	9E450–04533	.CONNECTOR	1					F-4-W
3	92990–04100	.WASHER, SPRING	2					
4	95380–04600	.NUT	2					
5	6Y5–8355X–T1	.BRACKET, METER 1	1					
6	6Y5–83570–S5	SPEEDOMETER ASSY	1					
7	92990–04100	.WASHER, SPRING	2					
8	95380–04600	.NUT	2					
9	6Y5–83533–T2	.GROMMET	1					
10	6Y5–8355X–T1	.BRACKET, METER 1	1					
11	90465–11M10	CLAMP	1					
12	6Y5–83557–10	TUBE (8M)	1					
13	6Y5–83500–F2	FUEL MANAGEMENT METER	1					
14	92990–04100	.WASHER, SPRING	2					
15	95380–04600	.NUT	2					
16	6Y5–8355X–T1	.BRACKET, METER 1	1					
17	6Y5–87122–S0	.CORD ASSY 1	1					FOR GPS CONNECTION
18	6Y5–85752–01	SENDER UNIT ASSY, FUEL METER	2					
19	90158–06002	SCREW, WOOD	4					
20	6Y5–83553–F1	WIRE, LEAD (L=8.0M)	1					FOR FUEL SENDER

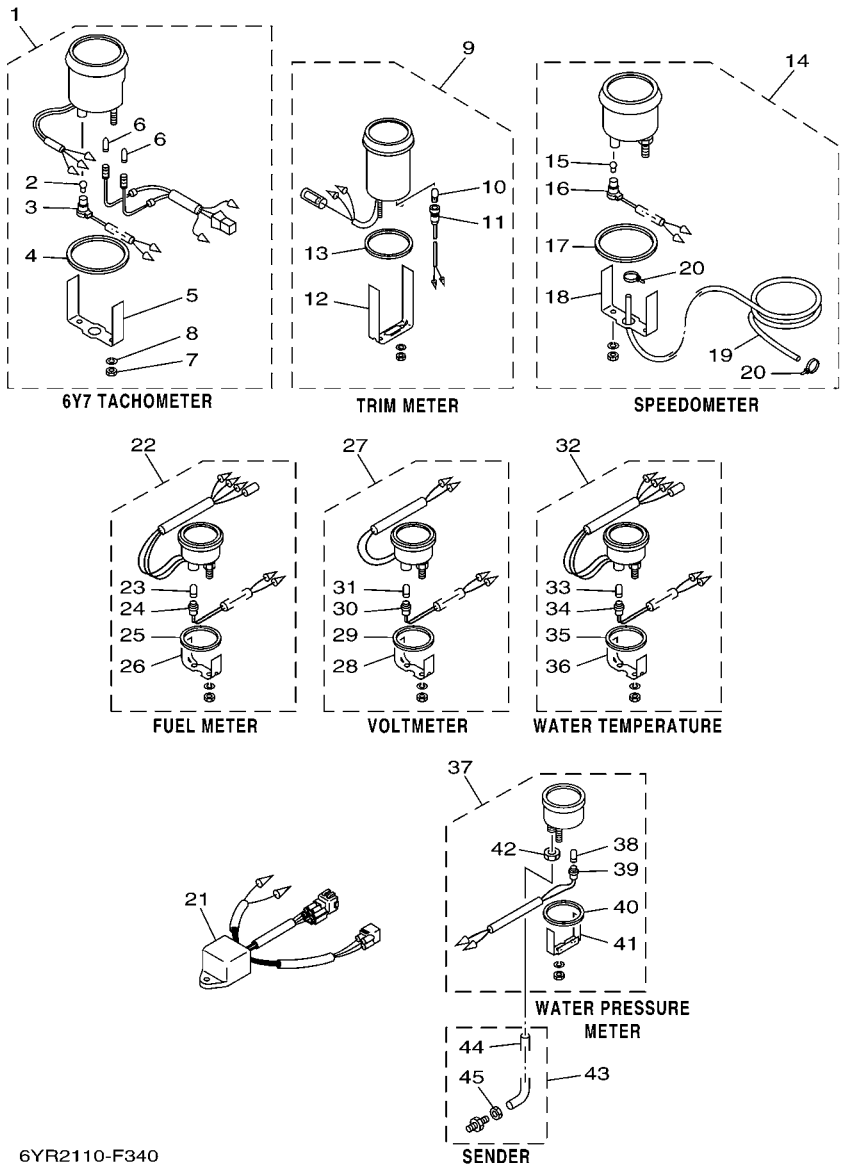

FIG. 34 INSTRUMENTS ANALOGUE

REF. NO.	PART NO.	DESCRIPTION	USA					REMARKS
1	6Y7–83540–80	TACHOMETER ASSY	1					UR WITH OIL/TEMP LAMP
	6Y7–83540–90	TACHOMETER ASSY	1					UR WITH OIL/TEMP LAMP
2	6Y5–83517–00	.BULB (T10, 12V-1.7W)	1					
3	6Y5–83536–40	.SOCKET, METER	1					
4	6Y5–83523–00	.DAMPER	1					
5	6Y5–83514–00	.PLATE, FITTING	1					
6	6Y5–83518–00	.BULB (12V-1.7W T6.5)	2					
7	95380–05600	.NUT	2					
8	92990–05100	.WASHER, SPRING	2					
9	6Y7–83670–40	TRIM METER ASSY.	1					UR
	6Y7–83670–50	TRIM METER ASSY.	1					UR
10	6Y5–83518–00	.BULB (12V-1.7W T6.5)	1					
11	6Y5–83536–00	.SOCKET, METER	1					
12	6Y5–83544–00	.PLATE, FITTING	1					
13	688–83664–00	.DAMPER	1					
14	6Y5–83510–00	SPEEDOMETER ASSY (75MPH)	1					UR
	6Y5–83510–10	SPEEDOMETER ASSY (50MPH)	1					UR
	6Y7–83510–00	SPEEDOMETER ASSY (75MPH)	1					UR
	6Y7–83510–10	SPEEDOMETER ASSY (75MPH)	1					UR
15	6Y5–83517–00	.BULB (T10, 12V-1.7W)	1					
16	6Y5–83536–10	.SOCKET, METER	1					UR 6Y5 SPEEDOMETER
	6Y5–83536–40	.SOCKET, METER	1					UR 6Y7 SPEEDOMETER
17	6Y5–83523–00	.DAMPER	1					
18	6Y5–83514–00	.PLATE, FITTING	1					
19	688–83557–00	.TUBE	1					
20	90465–11M10	.CLAMP	2					
21	6Y5–81950–02	RELAY ASSY	1					FOR 6Y5 OIL LIGHT

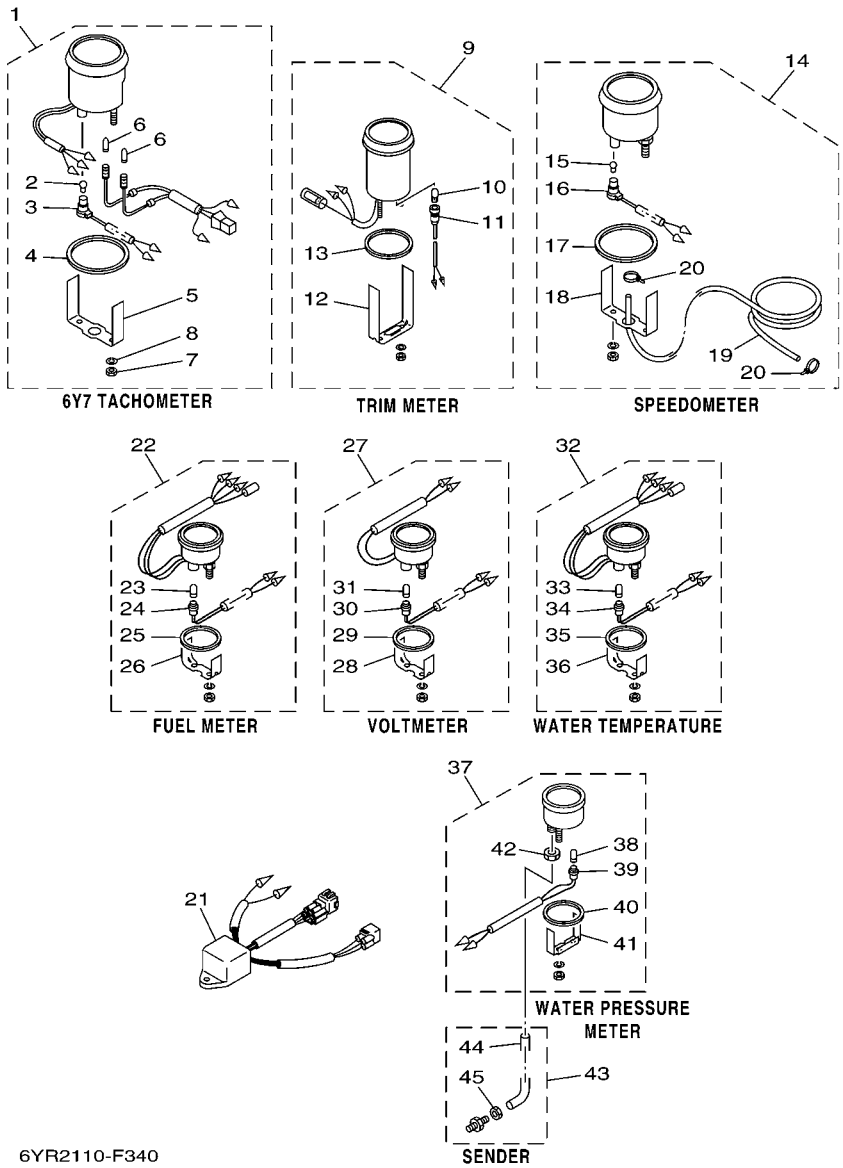

FIG. 34 INSTRUMENTS ANALOGUE

REF. NO.	PART NO.	DESCRIPTION	USA					REMARKS
22	6Y7–85750–10	FUEL METER ASSY	1					UR
	6Y7–85750–30	FUEL METER ASSY	1					UR
23	6Y5–83518–00	.BULB (12V-1.7W T6.5)	1					
24	6Y5–83536–00	.SOCKET, METER	1					
25	688–83664–00	.DAMPER	1					
26	6Y5–83544–00	.PLATE, FITTING	1					
27	6Y5–83503–00	VOLTMETER ASSY	1					UR
	6Y7–83503–00	VOLTMETER ASSY	1					UR
	6Y7–83503–10	VOLTMETER ASSY	1					UR
28	6Y5–83544–00	.PLATE, FITTING	1					
29	688–83664–00	.DAMPER	1					
30	6Y5–83536–00	.SOCKET, METER	1					
31	6Y5–83518–00	.BULB (12V-1.7W T6.5)	1					
32	6Y5–83590–00	WATER TEMPERATURE ASSY	1					UR
	6Y7–83590–00	WATER TEMPERATURE ASSY	1					UR
	6Y7–83590–10	WATER TEMPERATURE ASSY	1					UR
33	6Y5–83518–00	.BULB (12V-1.7W T6.5)	1					
34	6Y5–83536–00	.SOCKET, METER	1					
35	688–83664–00	.DAMPER	1					
36	6Y5–83544–00	.PLATE, FITTING	1					
37	6Y7–83660–10	WATER PRESSURE METER ASSY	1					UR
	6Y7–83660–30	WATER PRESSURE METER ASSY	1					UR
38	6Y5–83518–00	.BULB (12V-1.7W T6.5)	1					
39	6Y5–83536–00	.SOCKET, METER	1					
40	688–83664–00	.DAMPER	1					
41	688–83665–00	.PLATE, FITTING	1					
42	663–83668–00	.NUT, NIPPLE	1					

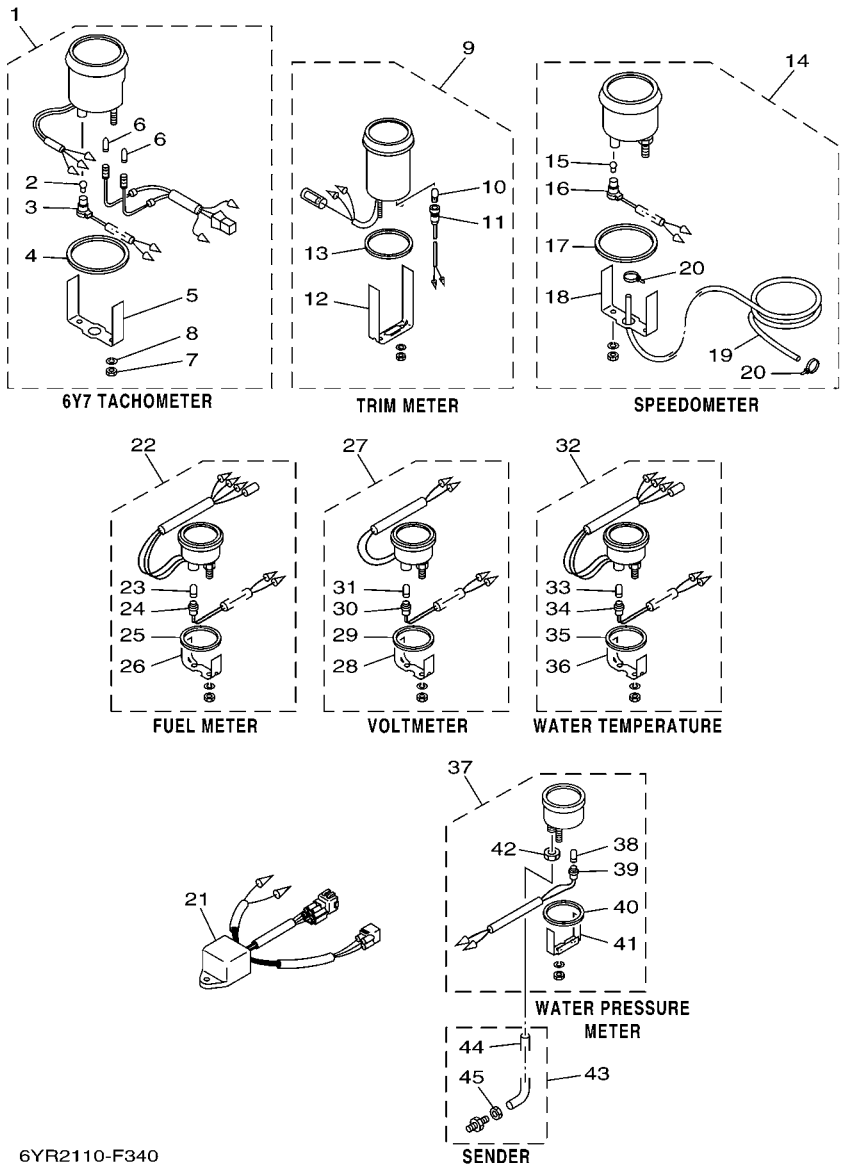

FIG. 34 INSTRUMENTS ANALOGUE

REF. NO.	PART NO.	DESCRIPTION	USA					REMARKS
43	688–83667–00	SENDER	1					
44	688–83666–00	.TUBE	1					
45	663–83668–00	.NUT, NIPPLE	1					

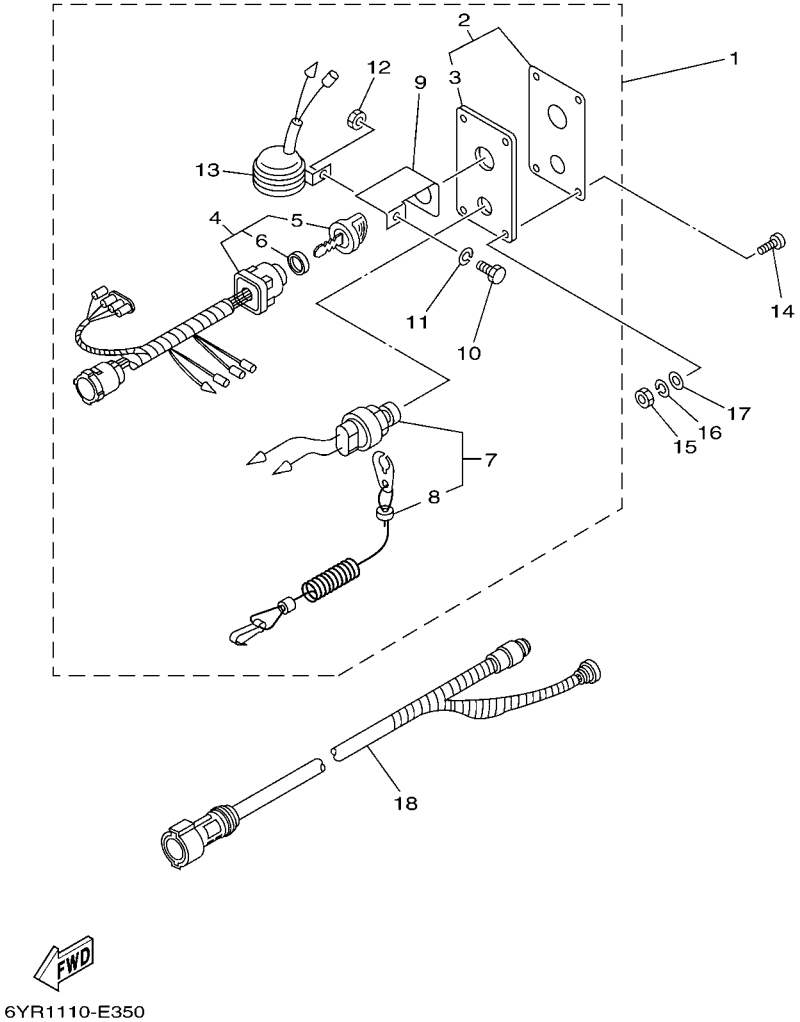

FIG. 35 ELECTRICAL SWITCH PANEL SINGLE

REF. NO.	PART NO.	DESCRIPTION	USA					REMARKS
1	704–82570–08	PANEL SWITCH ASSY	1					WITH CHOKE
2	704–82571–02	.PANEL, SWITCH	1					
3	6R5–82588–01	..PLATE	1					
4	704–82510–07	.MAIN SWITCH ASSY	1					
5	703–82577–00	..CAP, KEY	1					
6	6K1–82532–00	..CAP	1					
7	688–82575–01	.ENGINE STOP SWITCH ASSY	1					
8	682–82556–00	..LANYARD, STOP SWITCH	1					
9	64D–82581–00	.STAY, CORD CLAMP	1					
10	97303–05012	.BOLT	1					
11	92903–05100	.WASHER, SPRING	1					
12	95303–05700	.NUT	1					
13	688–83383–11	.BUZZER	1					
14	90149–05M05	SCREW	4					
15	95380–05600	NUT	4					
16	92990–05100	WASHER, SPRING	4					
17	92990–05600	WASHER, PLATE	4					
18	6K1–8258A–40	EXTENSION, WIRE HARNESS (8M)	1					UR (10P)
	61B–8258A–01	EXTENSION, WIRE HARNESS (9.5M)	1					UR (10P)
	6X3–8258A–00	EXTENSION, WIRE HARNESS (5M)	1					UR (10P)
	6X3–8258A–10	EXTENSION, WIRE HARNESS (6M)	1					UR (10P)

FIG. 36 ELECTRICAL SWITCH PANEL INDIVIDUAL

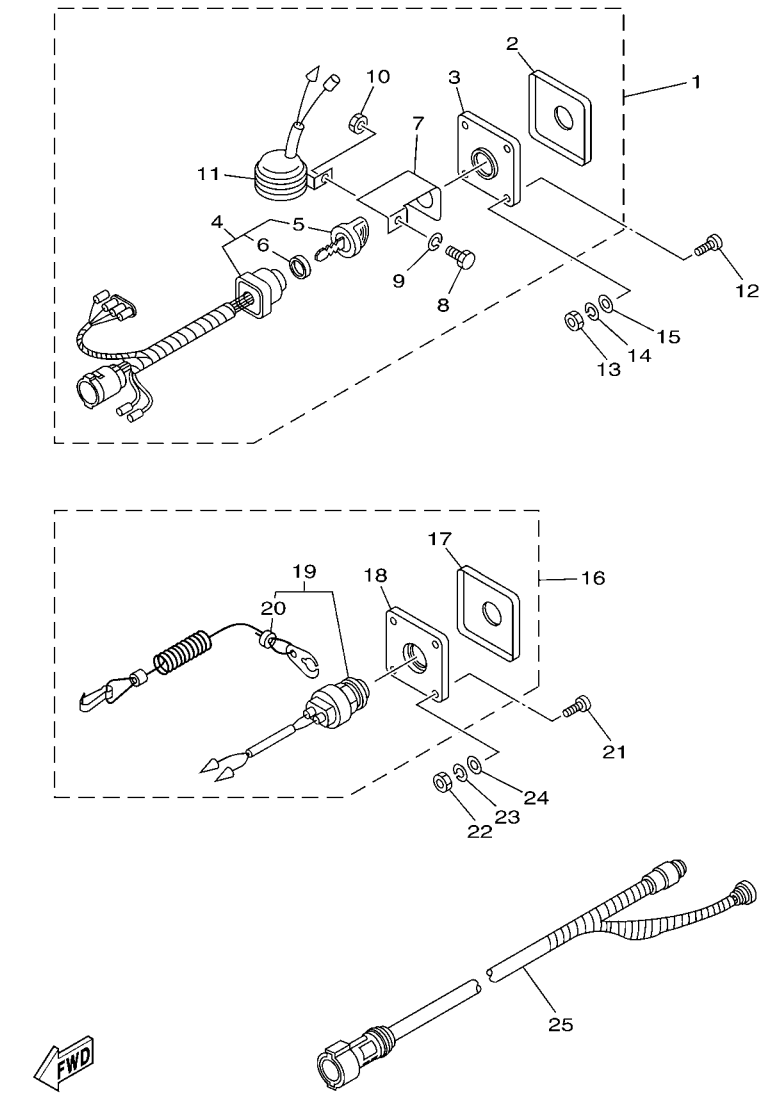

REF. NO.	PART NO.	DESCRIPTION	USA					REMARKS
1	64D–82570–03	PANEL SWITCH ASSY	1					WITH CHOKE
2	64D–82571–00	.PANEL, SWITCH	1					
3	64D–82588–00	.PLATE	1					
4	64D–82510–03	.MAIN SWITCH ASSY	1					
5	703–82577–00	..CAP, KEY	1					
6	6K1–82532–00	..CAP	1					
7	64D–82581–00	.STAY, CORD CLAMP	1					
8	97303–05012	.BOLT	1					
9	92903–05100	.WASHER, SPRING	1					
10	95303–05700	.NUT	1					
11	688–83383–11	.BUZZER	1					
12	90149–05M05	SCREW	4					
13	95380–05600	NUT	4					
14	92990–05100	WASHER, SPRING	4					
15	92990–05600	WASHER, PLATE	4					
16	64D–82570–10	PANEL SWITCH ASSY	1					
17	64D–82571–10	.PANEL, SWITCH	1					
18	64D–82588–10	.PLATE	1					
19	64D–82575–00	.ENGINE STOP SWITCH ASSY	1					
20	682–82556–00	..LANYARD, STOP SWITCH	1					
21	90149–05M05	SCREW	4					
22	95380–05600	NUT	4					
23	92990–05100	WASHER, SPRING	4					
24	92990–05600	WASHER, PLATE	4					
25	6K1–8258A–40	EXTENSION, WIRE HARNESS (8M)	1					UR (10P)
	61B–8258A–01	EXTENSION, WIRE HARNESS (9.5M)	1					UR (10P)
	6X3–8258A–00	EXTENSION, WIRE HARNESS (5M)	1					UR (10P)

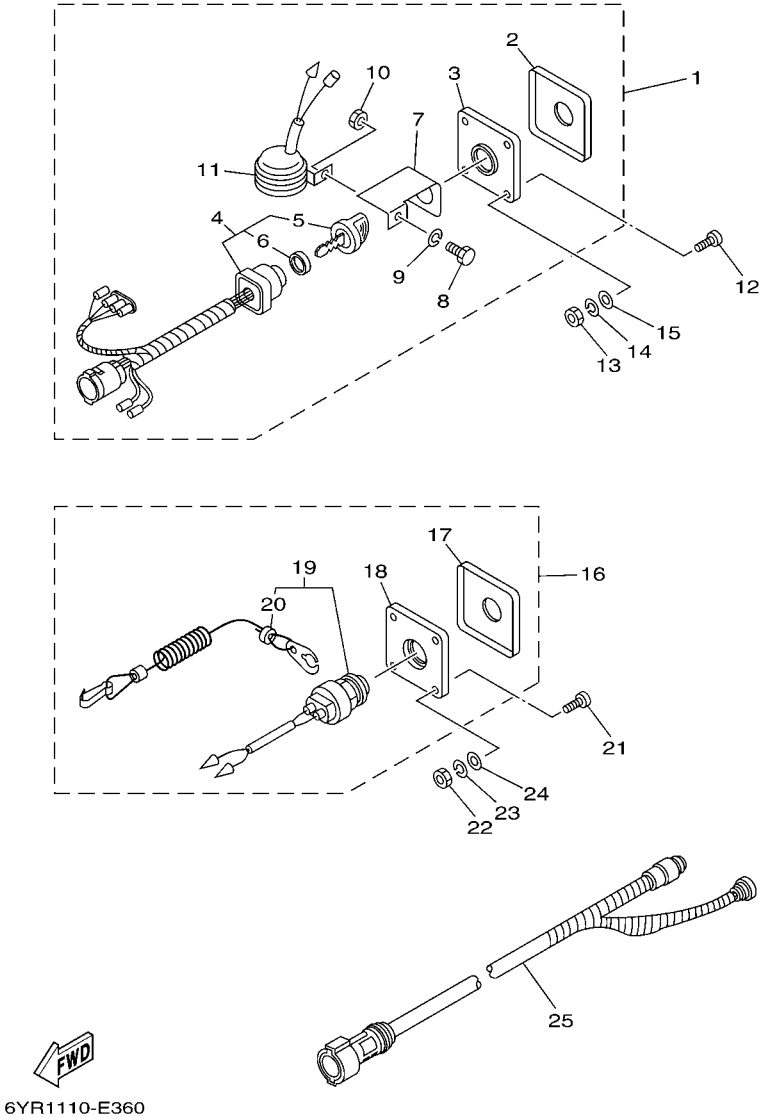

FIG. 36 ELECTRICAL SWITCH PANEL INDIVIDUAL

REF. NO.	PART NO.	DESCRIPTION	USA					REMARKS
25	6X3–8258A–10	EXTENSION, WIRE HARNESS (6M)	1					UR (10P)

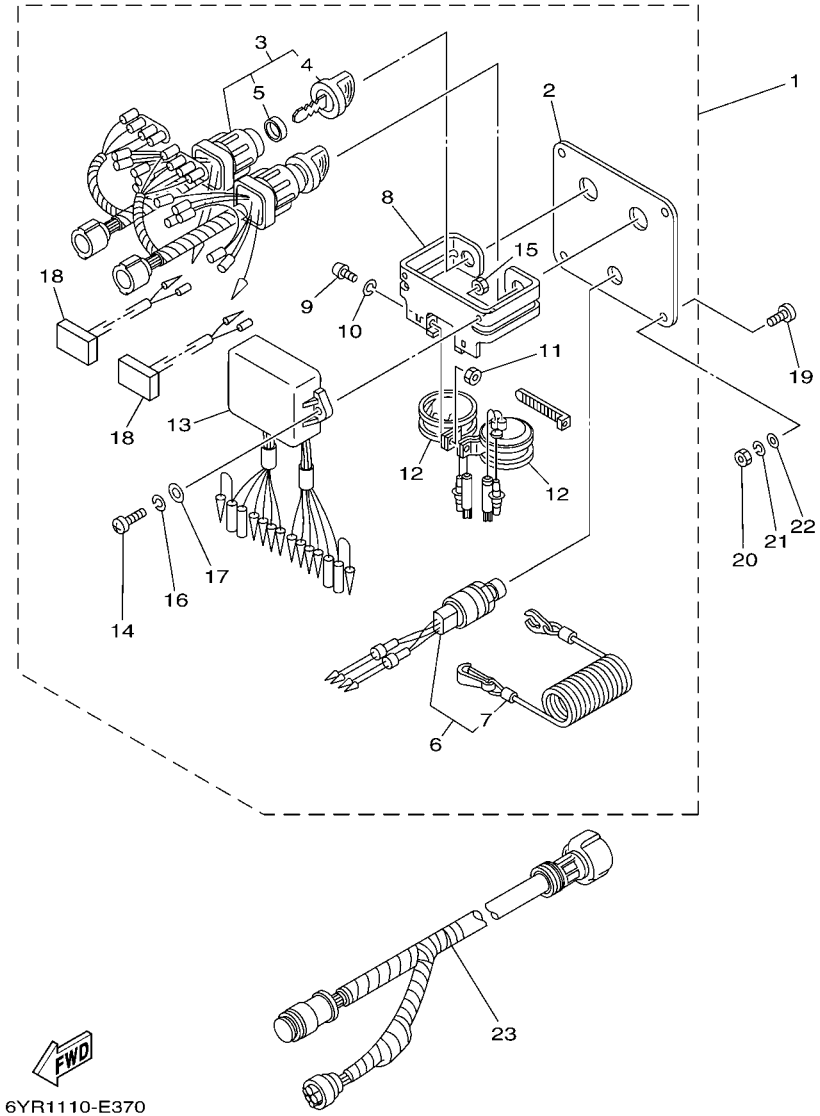

FIG. 37 ELECTRICAL SWITCH PANEL TWIN

REF. NO.	PART NO.	DESCRIPTION	USA					REMARKS
1	6K1–82570–08	PANEL SWITCH ASSY	1					WITH CHOKE
2	6K1–82571–02	.PLATE, PANEL SWITCH	1					
3	6K1–82510–06	.MAIN SWITCH ASSY	2					
4	703–82577–00	..CAP, KEY	1					
5	6K1–82532–00	..CAP	1					
6	6K1–82575–00	.ENGINE STOP SWITCH ASSY	1					
7	682–82556–00	..LANYARD, STOP SWITCH	1					
8	6K1–83614–01	.BRACKET	1					
9	98980–05010	.SCREW, BIND	2					
10	92990–05100	.WASHER, SPRING	2					
11	95380–05600	.NUT	2					
12	688–83383–11	.BUZZER	2					
13	6K1–85830–01	.CONTROL UNIT ASSY	1					
14	98980–06020	.SCREW, BIND	2					
15	95380–06600	.NUT, HEXAGON	2					
16	92990–06100	.WASHER, SPRING	2					
17	92990–06600	.WASHER, PLATE	2					
18	6K1–81980–00	.DIODE ASSY	2					
19	90149–05M05	SCREW	4					
20	95380–05600	NUT	4					
21	92990–05100	WASHER, SPRING	4					
22	92990–05600	WASHER, PLATE	4					
23	6K1–8258A–40	EXTENSION, WIRE HARNESS (8M)	1					UR (10P)
	61B–8258A–01	EXTENSION, WIRE HARNESS (9.5M)	1					UR (10P)
	6X3–8258A–00	EXTENSION, WIRE HARNESS (5M)	1					UR (10P)
	6X3–8258A–10	EXTENSION, WIRE HARNESS (6M)	1					UR (10P)

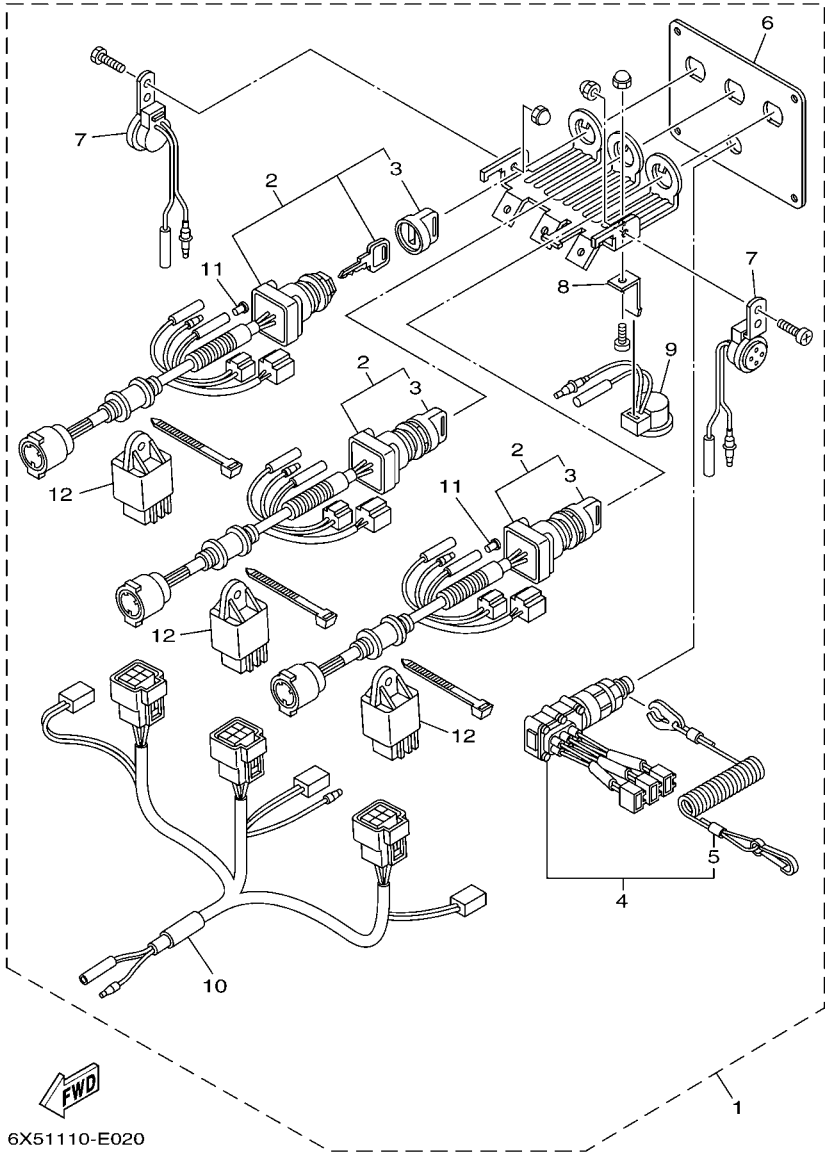

FIG. 38 ELECTRICAL SWITCH PANEL TRIPLE

REF. NO.	PART NO.	DESCRIPTION	USA					REMARKS
1	6X5–82570–00	PANEL SWITCH ASSY	1					
2	6X5–82510–00	.MAIN SWITCH ASSY	3					
3	676–82577–00	..CAP, KEY	1					
4	6X5–82575–00	.ENGINE STOP SWITCH ASSY	1					
5	682–82556–00	..LANYARD, STOP SWITCH	1					
6	6X5–82571–00	.PANEL, SWITCH	1					
7	6X5–83383–00	.BUZZER	2					
8	6X5–82581–00	.STAY, CORD CLAMP	1					
9	6X4–83383–00	.BUZZER	1					
10	6X5–82507–00	.WIRE, LEAD	1					
11	703–82119–00	.COVER, LEAD WIRE	2					
12	68V–81950–00	.RELAY ASSY	3					

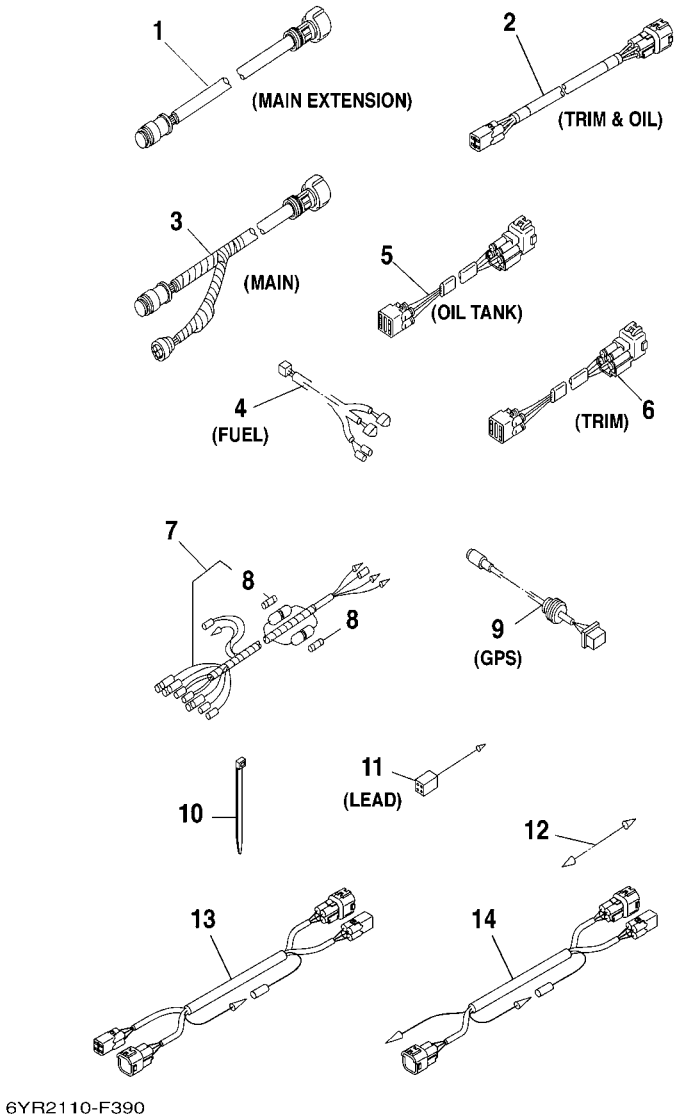

FIG. 39 ELECTRICAL WIRE HARNESSES

REF. NO.	PART NO.	DESCRIPTION	USA					REMARKS
1	688–8258A–10	EXTENSION, WIRE HARNESS (2M)	1					UR EXTENSION,MAIN (10P)
	688–8258A–20	EXTENSION, WIRE HARNESS (4.9M)	1					UR EXTENSION,MAIN (10P)
	688–8258A–30	EXTENSION, WIRE HARNESS (3M)	1					UR EXTENSION,MAIN (10P)
	703–8258A–00	EXTENSION, WIRE HARNESS (5M)	1					UR 7P TO 10P ADAPTER
2	6Y5–83653–00	WIRE, LEAD	1					UR TRIM & OIL GAUGE 4P,5M
	6Y5–83653–10	WIRE, LEAD	1					UR TRIM & OIL GAUGE 4P,6M
	6Y5–83653–20	WIRE, LEAD	1					UR TRIM & OIL GAUGE 4P,7M
	6Y5–83653–30	WIRE, LEAD	1					UR TRIM & OIL GAUGE 4P,8M
	6Y5–83653–40	WIRE, LEAD	1					UR TRIM & OIL GAUGE 4P,9M
3	688–8258A–50	EXTENSION, WIRE HARNESS (5M)	1					UR MAIN (10P)
	688–8258A–60	EXTENSION, WIRE HARNESS (6M)	1					UR MAIN (10P)
	61B–8258A–01	EXTENSION, WIRE HARNESS (9.5M)	1					UR MAIN (10P)
	6K1–8258A–40	EXTENSION, WIRE HARNESS (8M)	1					UR MAIN (10P)
	6X3–8258A–00	EXTENSION, WIRE HARNESS (5M)	1					UR MAIN (10P)
	6X3–8258A–10	EXTENSION, WIRE HARNESS (6M)	1					UR MAIN (10P)
4	6Y5–83553–F1	WIRE, LEAD (L=8.0M)	1					
5	6R3–85721–30	WIRE, LEAD (L=3.0M)	1					UR OIL TANK (4P)
	6R3–85721–50	WIRE, LEAD (L=5.0M)	1					UR OIL TANK (4P)
	6R3–85721–80	WIRE, LEAD (L=8.0M)	1					UR OIL TANK (4P)
6	6R3–82553–30	EXTENSION, WIRE LEAD (L=3.0M)	1					UR TRIM GAUGE (4P)
	6R3–82553–50	EXTENSION, WIRE LEAD (L=5.0M)	1					UR TRIM GAUGE (4P)
	6R3–82553–70	EXTENSION, WIRE LEAD (L=7.0M)	1					UR TRIM GAUGE (4P)
	6R3–82553–80	EXTENSION, WIRE LEAD (L=8.0M)	1					UR TRIM GAUGE (4P)
7	6Y5–83553–N0	WIRE, LEAD (L=2.5M)	1					
8	1E6–82151–00	.FUSE (10A)	2					
9	6Y5–87122–S0	CORD ASSY 1	1					FOR GPS CONNECTION
10	90465–11M10	CLAMP	1					

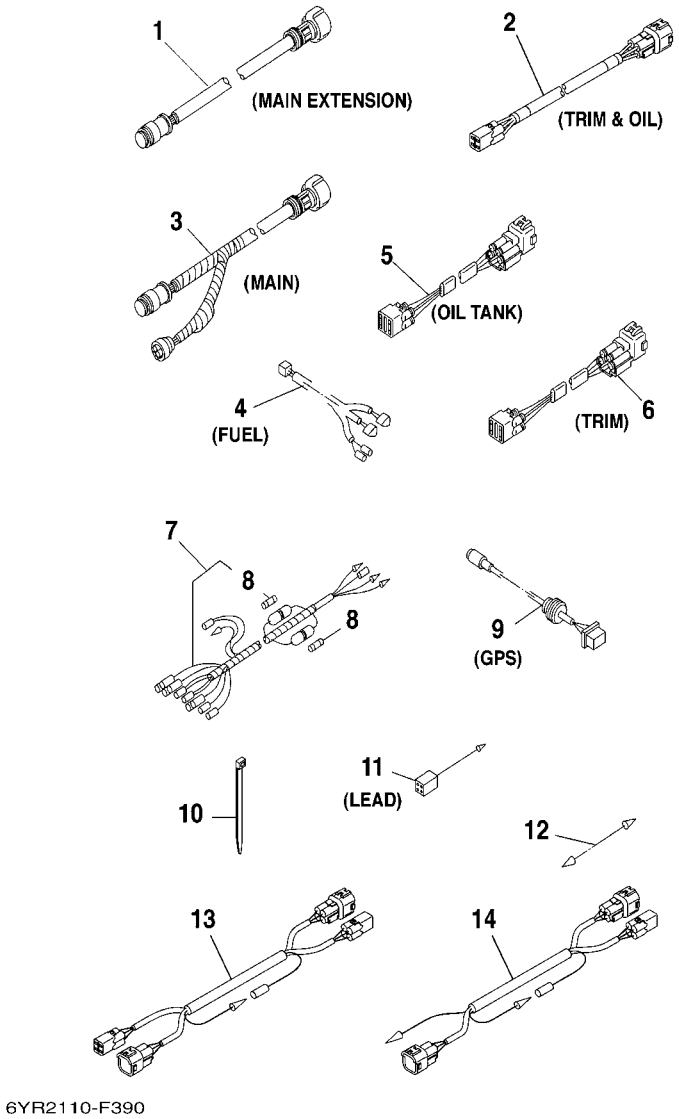

FIG. 39 ELECTRICAL WIRE HARNESSES

REF. NO.	PART NO.	DESCRIPTION	USA					REMARKS
11	6Y5–82149–00	WIRE, LEAD (BLUE) (L300)	1					UR Y-LEAD
	6Y5–82117–00	WIRE, LEAD (BLACK) (L300)	1					UR Y-LEAD
	6Y5–82521–00	WIRE, LEAD (YELLOW) (L300)	1					UR Y-LEAD
12	703–82531–00	WIRE, LEAD (L70)	1					
13	6Y5–85335–00	ADAPTER, INTERFACE	1					
14	6Y5–85335–10	ADAPTER, INTERFACE	1					

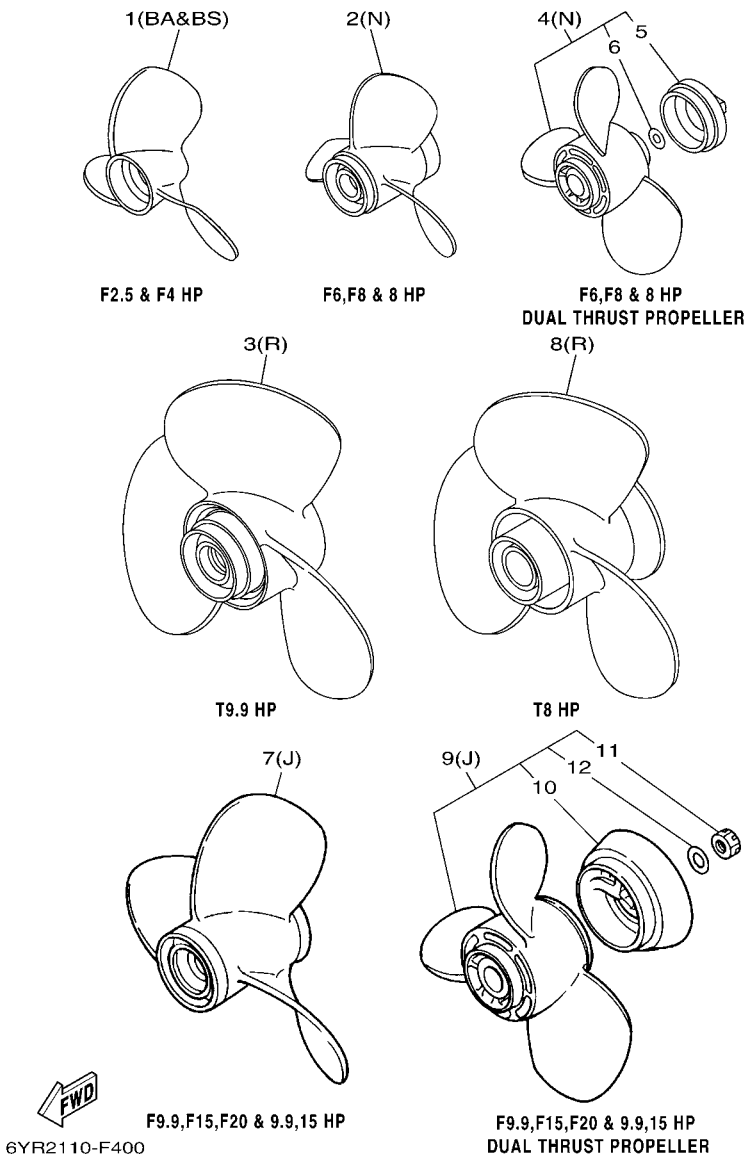

FIG. 40 PROPELLERS F2.5 THROUGH F20

REF. NO.	PART NO.	DESCRIPTION	USA					REMARKS
1	6L5–45945–00–EL	PROPELLER (3X7-1/4"X7-1/4"-BS)	1					UR F2.5
	6L5–45947–00–EL	PROPELLER (3X7-1/4"X8-1/4"-BS)	1					UR F2.5
	6L5–45949–00–EL	PROPELLER (3X7-1/4"X5"-BS)	1					UR F2.5
	6L5–45952–00–EL	PROPELLER (3X7-1/4"X5-1/2"-BS)	1					UR F2.5
	6E0–45941–01–EL	PROPELLER (3X7-1/2"X8"-BA)	1					UR F4
	6E0–45943–01–EL	PROPELLER (3X7-1/2"X7"-BA)	1					UR F4
	6E0–45945–00–EL	PROPELLER (3X7-1/4"X7-1/4"-BA)	1					UR F4
2	6G1–45941–00–EL	PROPELLER (3X8-1/2"X8-1/2"-N)	1					UR F6,F8 & 8
	6G1–45943–00–EL	PROPELLER (3X8-1/2"X7-1/2"-N)	1					UR F6,F8 & 8
	6G1–45947–00–EL	PROPELLER (3X8-1/2"X6-1/2"-N)	1					UR F6,F8 & 8
	6G1–45952–00–EL	PROPELLER (3X8-1/2"X8"-N)	1					UR F6,F8 & 8
3	6G8–45941–00	PROPELLER (3X11-3/4"X11"-R)	1					T9.9 DUAL THRUST
4	6G1–W4591–01–EL	PROPELLER (3X9"X7"-N)	1					F6,F8 & 8 DUAL THRUST
5	6G1–45616–01	.NUT, PROPELLER	1					
6	90201–10M02	.WASHER, PLATE	1					
7	683–45941–00–EL	PROPELLER (3X9-1/4"X12"-J)	1					UR
	683–45943–00–EL	PROPELLER (3X9-1/4"X10-1/2"-J)	1					UR
	683–45945–00–EL	PROPELLER (3X9-1/4"X9"-J)	1					UR SEMI-WEEDLESS
	683–45947–00–EL	PROPELLER (3X9-1/4"X8"-J)	1					UR SEMI-WEEDLESS
	683–45952–00–EL	PROPELLER (3X9-1/4"X9-3/4"-J)	1					UR
	63V–45943–00–EL	PROPELLER (3X9-1/4"X11"-J)	1					UR
	63V–45945–00–EL	PROPELLER (3X9-1/4"X9"-J)	1					UR
	63V–45947–00–EL	PROPELLER (3X9-1/4"X8"-J)	1					UR
	63V–45941–10–EL	PROPELLER (3X9-1/4"X12"-J1)	1					UR
	63V–45943–10–EL	PROPELLER (3X9-1/4"X11"-J1)	1					UR
	63V–45945–10–EL	PROPELLER (3X9-1/4"X9"-J1)	1					UR
	63V–45952–10–EL	PROPELLER (3X9-1/4"X10"-J1)	1					UR

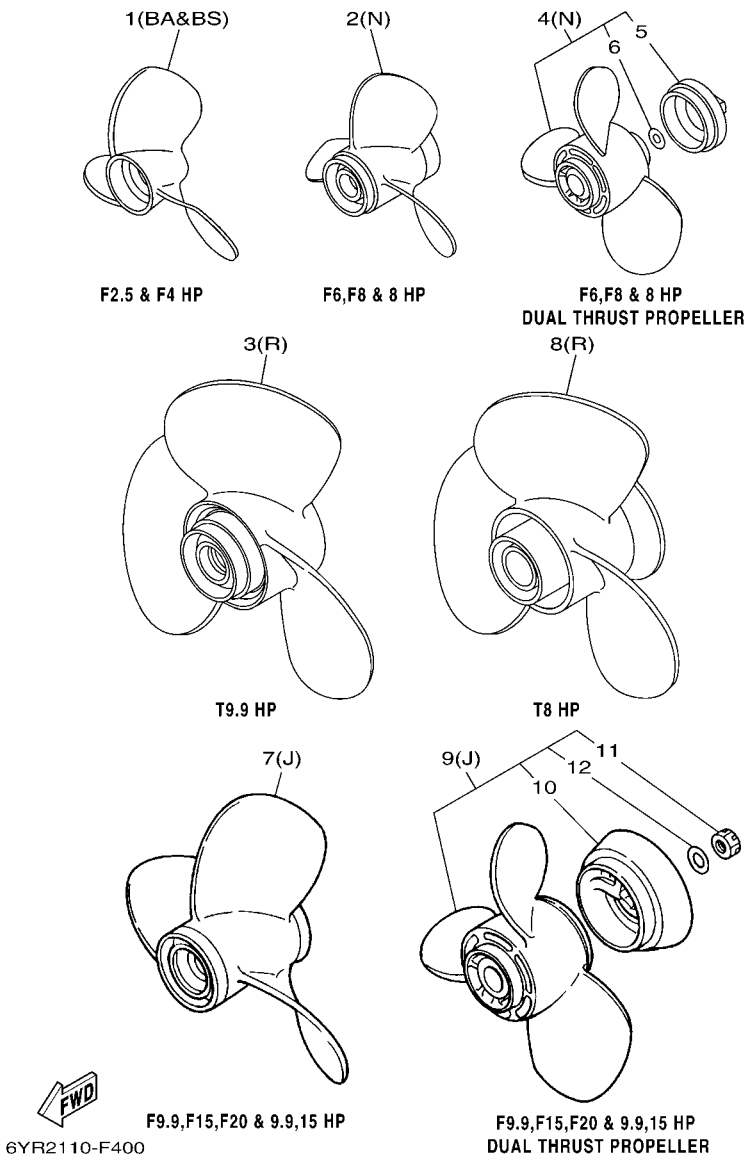

FIG. 40 PROPELLERS F2.5 THROUGH F20

REF. NO.	PART NO.	DESCRIPTION	USA					REMARKS
8	69G–45941–00–EL	PROPELLER (3X11-3/4"X5-3/4"-R)	1					T8
9	683–W4591–02–EL	PROPELLER (3X9-3/4"X8"-J)	1					UR DUAL THRUST
	683–W4592–02–EL	PROPELLER (3X9-3/4"X6-1/2"-J)	1					UR DUAL THRUST
10	6E7–45986–00	.RING, DEFLECTOR	1					
11	90171–10M07	.NUT, CASTLE	1					
12	90201–10M02	.WASHER, PLATE	1					

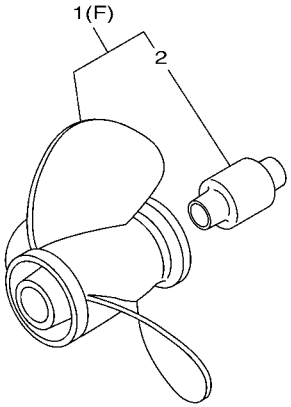

F25 & 25 HP

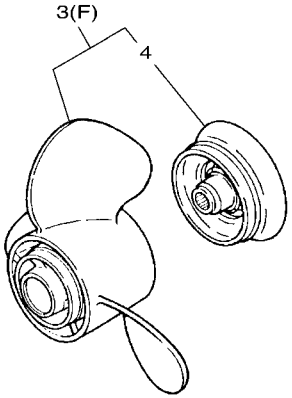

25 HP
DUAL THRUST PROPELLER

6YR1110-E410

FIG. 41 PROPELLERS F25 AND 25

REF. NO.	PART NO.	DESCRIPTION	USA					REMARKS
1	664–45941–01–EL	PROPELLER (3X9-7/8"X9"-F)	1					UR
	664–45943–01–EL	PROPELLER (3X9-7/8"X8"-F)	1					UR
	664–45945–00–EL	PROPELLER (3X9-7/8"X10-1/2"-F)	1					UR
	664–45947–01–EL	PROPELLER (3X9-7/8"X11-1/4"-F)	1					UR
	664–45949–02–EL	PROPELLER (3X9-7/8"X13"-F)	1					UR
	664–45952–00–EL	PROPELLER (3X9-7/8"X14"-F)	1					UR
	664–45954–01–EL	PROPELLER (3X9-7/8"X12"-F)	1					UR
	664–45970–00–98	PROPELLER (3X9-1/8"X13"-F)	1					UR WEEDLESS
	664–45972–00–98	PROPELLER (3X9-1/8"X12"-F)	1					UR WEEDLESS
	MAR–GYT3B–02–10	10 1/8 X 10 3 BLADE SS F	1					UR
	MAR–GYT3B–02–11	10 1/8 X 11 3 BLADE SS F	1					UR
	MAR–GYT3B–02–12	10 1/8 X 12 3 BLADE SS F	1					UR
	MAR–GYT3B–02–13	10 1/8 X 13 3 BLADE SS F	1					UR
	MAR–GYT3B–02–14	10 1/8 X 14 3 BLADE SS F	1					UR
2	664–45981–01	.DAMPER RUBBER, PROPELLER	1					FOR 664 PROPELLER
3	6J8–W4591–00–EL	PROPELLER (3X10-5/8X8-1/4-F)	1					DUAL THRUST
4	6J8–45986–10–98	.RING, DEFLECTOR	1					

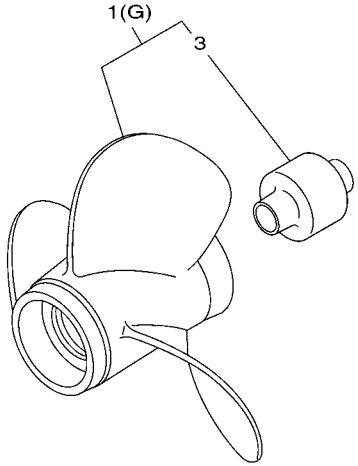

T25~ F60 & 50 HP

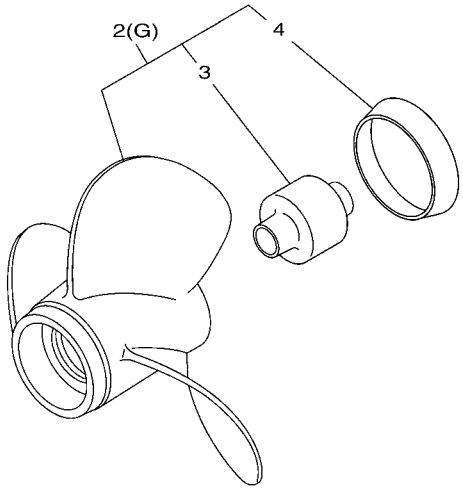

F40~ F60 & 50 HP

6YR2110-F420

FIG. 42 PROPELLERS T25 THROUGH 50

REF. NO.	PART NO.	DESCRIPTION	USA					REMARKS
1	663–45941–01–EL	PROPELLER (3X10-3/4"X17"-G)	1					UR
	663–45949–01–EL	PROPELLER (3X10-3/4"X16"-G)	1					UR
	663–45956–01–EL	PROPELLER (3X12-1/4"X9"-G)	1					UR
	663–45958–01–EL	PROPELLER (3X11-1/4"X14"-G)	1					UR
	663–45930–00–98	PROPELLER (3X10-1/4"X14"-G)	1					UR
	663–45970–60–98	PROPELLER (3X11-3/4"X12"-G)	1					UR
	663–45972–60–98	PROPELLER (3X12"X11"-G)	1					UR
	663–45974–60–98	PROPELLER (3X11-1/2"X13"-G)	1					UR
	663–45976–00–98	PROPELLER (3X10-1/4"X15"-G)	1					UR
	663–45978–00–98	PROPELLER (3X10-1/4"X16"-G)	1					UR
	68U–45941–00–EL	PROPELLER (3X12-1/4"X9"-G)	1					UR T25 DUAL THRUST
	MAR–GYT3B–03–12	10 1/2 X 12 3 BLADE SS G	1					UR
	MAR–GYT3B–03–13	3 BLADE 10.50X13	1					UR
	MAR–GYT3B–03–14	10 1/2 X 14 3 BLADE SS G	1					UR
	MAR–GYT3B–03–15	3 BLADE 10.50X15	1					UR
2	69W–45943–00–EL	PROPELLER (3X11"X15"-G)	1					UR
	69W–45945–00–EL	PROPELLER (3X11-1/8"X13"-G)	1					UR
	69W–45947–00–EL	PROPELLER (3X11-5/8"X11"-G)	1					UR
	69W–45952–00–EL	PROPELLER (3X11-3/8"X12"-G)	1					UR
	6H5–45943–00–EL	PROPELLER (3X10"X15"-G)	1					UR WITH LIP CUP
	6H5–45945–00–EL	PROPELLER (3X10-3/8"X13"-G)	1					UR WITH LIP CUP
	6H5–45952–00–EL	PROPELLER (3X10-5/8"X12"-G)	1					UR WITH LIP CUP
	6H5–45958–00–EL	PROPELLER (3X10-1/4"X14"-G)	1					UR WITH LIP CUP
3	663–45981–10	.DAMPER RUBBER, PROPELLER	1					
4	663–45986–00	.RING, DEFLECTOR	1					FOR 69W & 6H5 PROPELLER

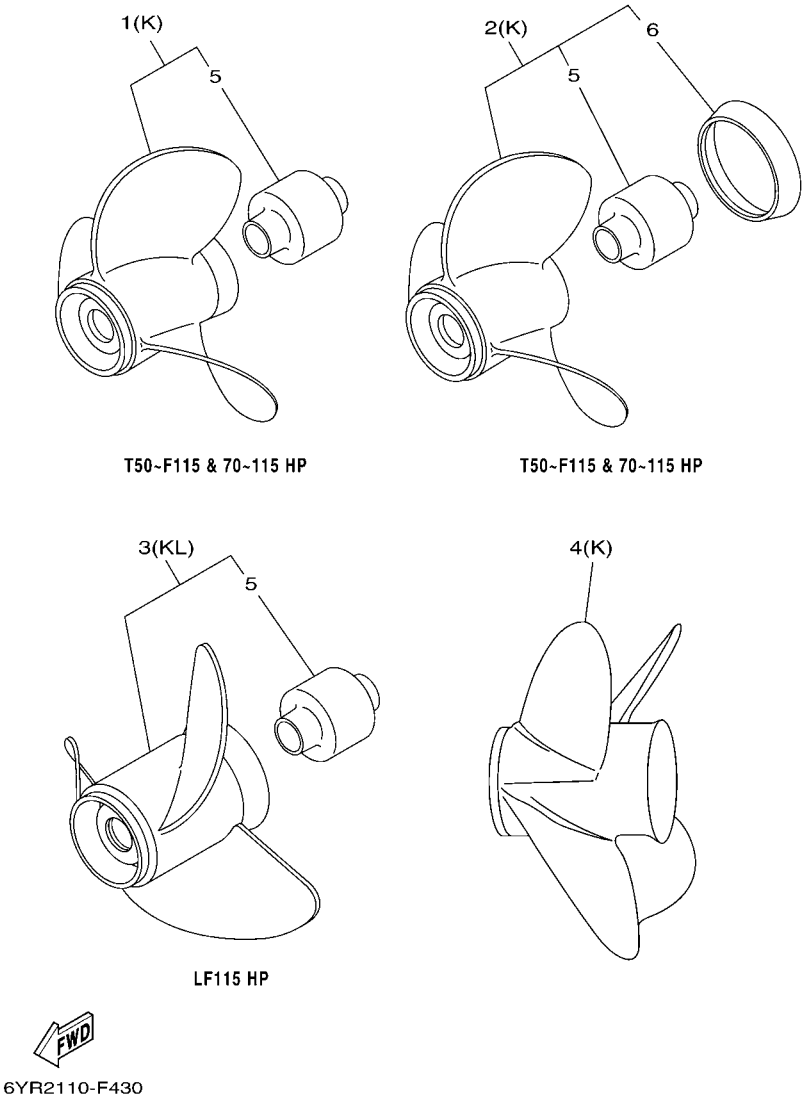

FIG. 43 PROPELLERS T50 THROUGH (L)F115

REF. NO.	PART NO.	DESCRIPTION	USA					REMARKS
1	688–45930–02–98	PROPELLER (3X13"X17"-K)	1					UR
	688–45932–60–98	PROPELLER (3X13-1/2"X14"-K)	1					UR
	688–45970–03–98	PROPELLER (3X13"X19"-K)	1					UR
	688–45972–02–98	PROPELLER (3X13"X21"-K)	1					UR
	688–45974–02–98	PROPELLER (3X13"X23"-K)	1					UR
	688–45976–01–98	PROPELLER (3X13"X25"-K)	1					UR
	688–45978–60–98	PROPELLER (3X13-1/2"X16"-K)	1					UR
	68S–45941–00–EL	PROPELLER (3X14"X11"-K)	1					UR DUAL THRUST
	62A–45970–10	PROPELLER (3X13-1/2"X21"-K)	1					UR HIGH PERFORMANCE
	62A–45972–10	PROPELLER (3X13-1/2"X23"-K)	1					UR HIGH PERFORMANCE
	62A–45974–10	PROPELLER (3X13-1/2"X19"-K)	1					UR HIGH PERFORMANCE
	MAR–GYT3B–V4–14	3BLADE V4 13.25X14 PROP	1					UR
	MAR–GYT3B–V4–16	3BLADE V4 13.25X16 PROP	1					UR
	MAR–GYT3B–V4–18	3BLADE V4 13.25X18 PROP	1					UR
	MAR–GYT3B–V4–20	3BLADE 13.25X20 V4	1					UR
	MAR–GYT3B–V4–22	3 BLADE V4 13.25X22 PROP	1					UR
	MAR–GYT3B–V4–24	3BLADE 13.25X24 V4	1					UR
2	6E5–45941–00–EL	PROPELLER (3X13"X19"-K)	1					UR
	6E5–45943–00–EL	PROPELLER (3X12-5/8"X21"-K)	1					UR
	6E5–45945–01–EL	PROPELLER (3X13-1/4"X17"-K)	1					UR
	6E5–45947–00–EL	PROPELLER (3X13-1/2"X15"-K)	1					UR
	6E5–45949–00–EL	PROPELLER (3X13-5/8"X13"-K)	1					UR
	6E5–45952–00–EL	PROPELLER (3X13"X23"-K)	1					UR
	6E5–45954–00–EL	PROPELLER (3X14"X11"-K)	1					UR
	6E5–45956–00–EL	PROPELLER (3X13"X25"-K)	1					UR
3	6L6–45930–00–98	PROPELLER (3X13"X17"-KL)	1					UR
	6L6–45970–00–98	PROPELLER (3X13"X19"-KL)	1					UR

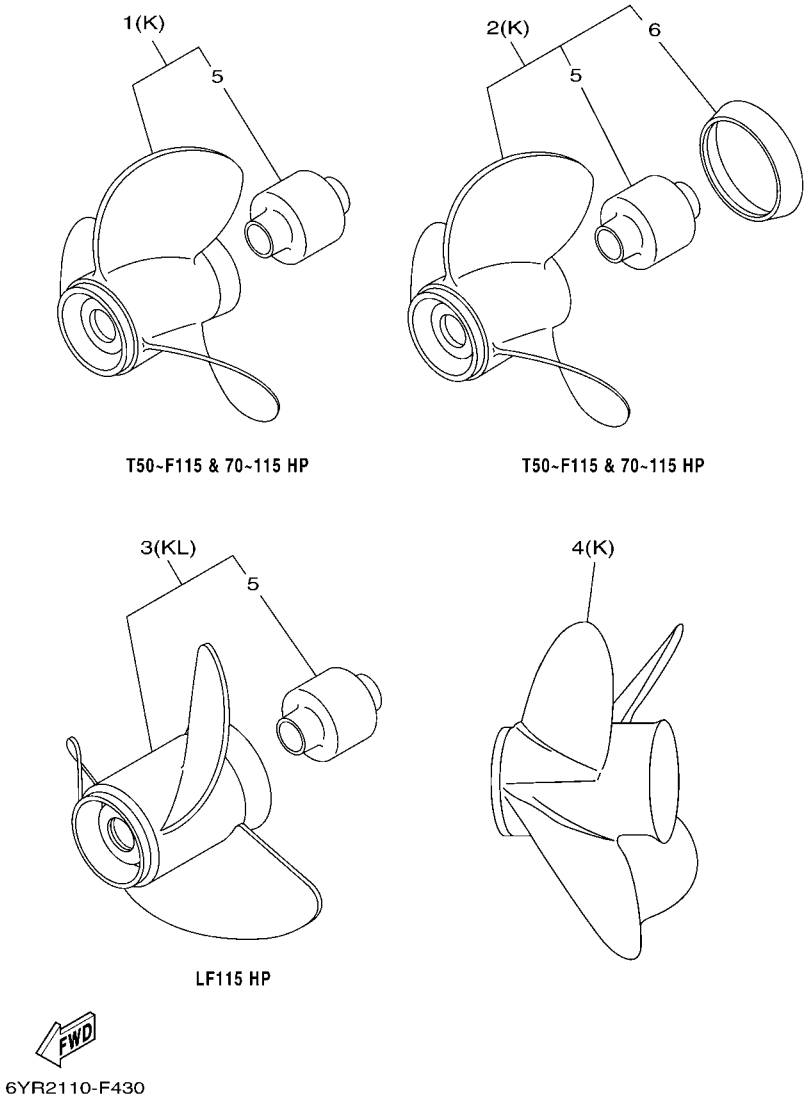

FIG. 43 PROPELLERS T50 THROUGH (L)F115

REF. NO.	PART NO.	DESCRIPTION	USA					REMARKS
3	6L6–45972–00–98	PROPELLER (3X13"X21"-KL)	1					UR
	MAR–GYT3B–L4–14	3 BLADE L4 13 1/4 X 14 CR PROP	1					UR ALUMINUM
	MAR–GYT3B–L4–16	3 BLADE L4 13 1/4 X 16 CR PROP	1					UR ALUMINUM
	MAR–GYT3B–L4–18	3 BLADE L4 13 1/4 X 18 CR PROP	1					UR ALUMINUM
	MAR–GYT3B–L4–20	3 BLADE L4 13 1/4 X 20 CR PROP	1					UR ALUMINUM
	MAR–GYT3B–L4–22	3 BLADE L4 13 1/4 X 22 CR PROP	1					UR ALUMINUM
4	MAR–GYT4B–V4–18	4 BLADE V4 13.25X18 PROP	1					UR
	MAR–GYT4B–V4–20	4 BLADE 13.25X20V4	1					UR
	MAR–GYT4B–V4–22	4 BLADE 13.25X22V4	1					UR
	MAR–GYT4B–V4–23	4 BLADE 13.25X23V4	1					UR
5	688–45981–00	.DAMPER RUBBER, PROPELLER	1					
6	688–45986–00	.RING, DEFLECTOR	1					FOR 6E5 PROPELLER

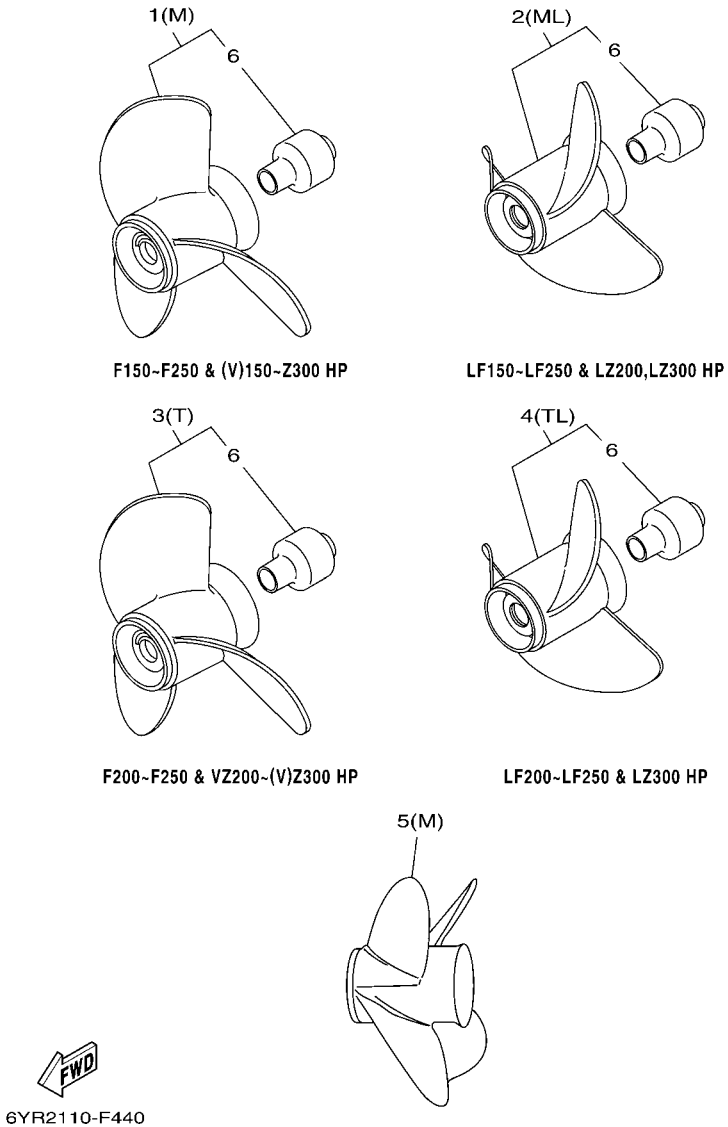

*1: FOR 6G5, 6J9 & 6K1 PROPELLER
*2: FOR 6G5, 66K, 6R4 & 6K1, 6R1 & 61A, 69L, 6D0 & 61B, 6D1 PROPELLER

FIG. 44 PROPELLERS (V)150 THROUGH (V)Z300

REF. NO.	PART NO.	DESCRIPTION	USA					REMARKS
1	6G5–45932–00–98	PROPELLER (3X15-3/4"X13"-M)	1					UR
	6G5–45941–00–98	PROPELLER (3X15-1/4"X15"-M)	1					UR
	6G5–45943–01–98	PROPELLER (3X13-3/4"X21"-M)	1					UR
	6G5–45945–01–98	PROPELLER (3X14"X19"-M)	1					UR
	6G5–45947–01–98	PROPELLER (3X14-1/2"X17"-M)	1					UR
	6G5–45949–00–98	PROPELLER (3X13-1/2"X23"-M)	1					UR
	6G5–45952–00–98	PROPELLER (3X14-5/8"X16"-M)	1					UR
	6G5–45970–02–98	PROPELLER (3X15-1/4"X15"-M)	1					UR
	6G5–45972–02–98	PROPELLER (3X13-3/4"X21"-M)	1					UR
	6G5–45974–03–98	PROPELLER (3X13-3/4"X19"-M2)	1					UR
	6G5–45976–01–98	PROPELLER (3X13-3/8"X23"-M)	1					UR
	6G5–45978–03–98	PROPELLER (3X13-3/4"X17"-M2)	1					UR
	66K–45970–B0	PROPELLER (3X14-1/2"X27"-M1)	1					UR
	66K–45972–B0	PROPELLER (3X14-1/2"X25"-M2)	1					UR
	66K–45974–B0	PROPELLER (3X14-1/2"X23"-M2)	1					UR
	6J9–45976–10	PROPELLER (3X14-1/2"X21"-M1)	1					UR
	6R4–45970–A1	PROPELLER (3X15-1/4"X19"-M)	1					UR
	6R4–45972–A0	PROPELLER (3X14-7/8"X21"-M)	1					UR
	6R4–45974–A0	PROPELLER (3X14-1/2"X23"-M)	1					UR
	6R4–45976–A0	PROPELLER (3X14-1/2"X15"-M)	1					UR
	6R4–45978–A0	PROPELLER (3X15-1/4"X17"-M)	1					UR
	MAR–GYT3B–V6–14	3 BLADE V6 14 1/4 X 14 SS PROP	1					UR
	MAR–GYT3B–V6–16	3BLADE 14.25X16 V6	1					UR
	MAR–GYT3B–V6–18	3BLADE 14.25X18 V6	1					UR
	MAR–GYT3B–V6–20	3 BLADE V6 14.25X20 PROP	1					UR
	MAR–GYT3B–V6–22	3BLADE 14.25X22 V6	1					UR
	MAR–GYT3B–V6–24	3BLADE 14.25X24 V6	1					UR

FIG. 44 PROPELLERS (V)150 THROUGH (V)Z300

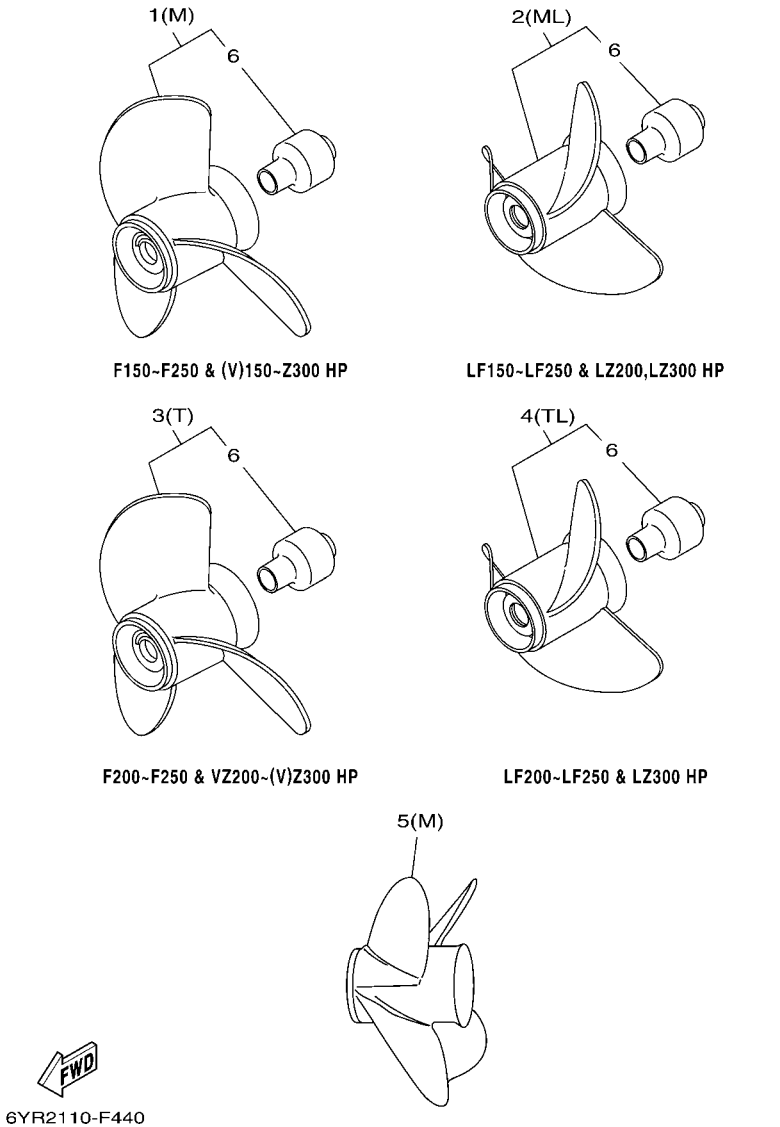

*1: FOR 6G5, 6J9 & 6K1 PROPELLER
*2: FOR 6G5, 66K, 6R4 & 6K1, 6R1 & 61A, 69L, 6D0 & 61B, 6D1 PROPELLER

REF. NO.	PART NO.	DESCRIPTION	USA					REMARKS
1	MAR–GYT3B–V6–26	3BLADE 14.25X26 V6	1					UR
2	6K1–45945–00–98	PROPELLER (3X14"X19"-ML)	1					UR
	6K1–45947–00–98	PROPELLER (3X14-1/2"X17"-ML)	1					UR
	6K1–45970–01–98	PROPELLER (3X15-1/4"X15"-ML)	1					UR
	6K1–45972–01–98	PROPELLER (3X13-3/4"X21"-ML)	1					UR
	6K1–45974–02–98	PROPELLER (3X13-3/4"X19"-ML1)	1					UR
	6K1–45976–00–98	PROPELLER (3X13-3/8"X23"-ML)	1					UR
	6K1–45978–02–98	PROPELLER (3X13-3/4"X17"-ML1)	1					UR
	6R1–45970–A1	PROPELLER (3X15-1/4"X19"-ML)	1					UR
	6R1–45972–A0	PROPELLER (3X14-7/8"X21"-ML)	1					UR
	6R1–45974–A0	PROPELLER (3X14-1/2"X23"-ML)	1					UR
	6R1–45976–A0	PROPELLER (3X15-1/4"X15"-ML)	1					UR
	6R1–45978–A0	PROPELLER (3X15-1/4"X17"-ML)	1					UR
	MAR–GYT3B–L6–14	3 BLADE L6 14 1/4 X 14 CR PROP	1					UR
	MAR–GYT3B–L6–16	3 BLADE L6 14 1/4 X 16 CR PROP	1					UR
	MAR–GYT3B–L6–18	3BLADE L14.25X18V6	1					UR
	MAR–GYT3B–L6–20	3BLADE L14.25X20V6	1					UR
	MAR–GYT3B–L6–22	3BLADE L14.25X22V6	1					UR
3	61A–45972–00–98	PROPELLER (3X14-1/2"X21"-T)	1					UR
	61A–45974–00–98	PROPELLER (3X14-1/2"X19"-T)	1					UR
	61A–45978–00–98	PROPELLER (3X15"X17"-T)	1					UR
	69L–45970–20	PROPELLER (3X15-1/8"X27"-T1)	1					UR
	69L–45972–20	PROPELLER (3X15-1/8"X25"-T1)	1					UR
	69L–45974–10	PROPELLER (3X14-1/2"X23"-T1)	1					UR
	69L–45976–10	PROPELLER (3X14-3/4"X29"-T1)	1					UR
	6D0–45970–00	PROPELLER (3X15-1/4"X19"-T)	1					UR
	6D0–45972–00	PROPELLER (3X15"X21"-T)	1					UR

FIG. 44 PROPELLERS (V)150 THROUGH (V)Z300

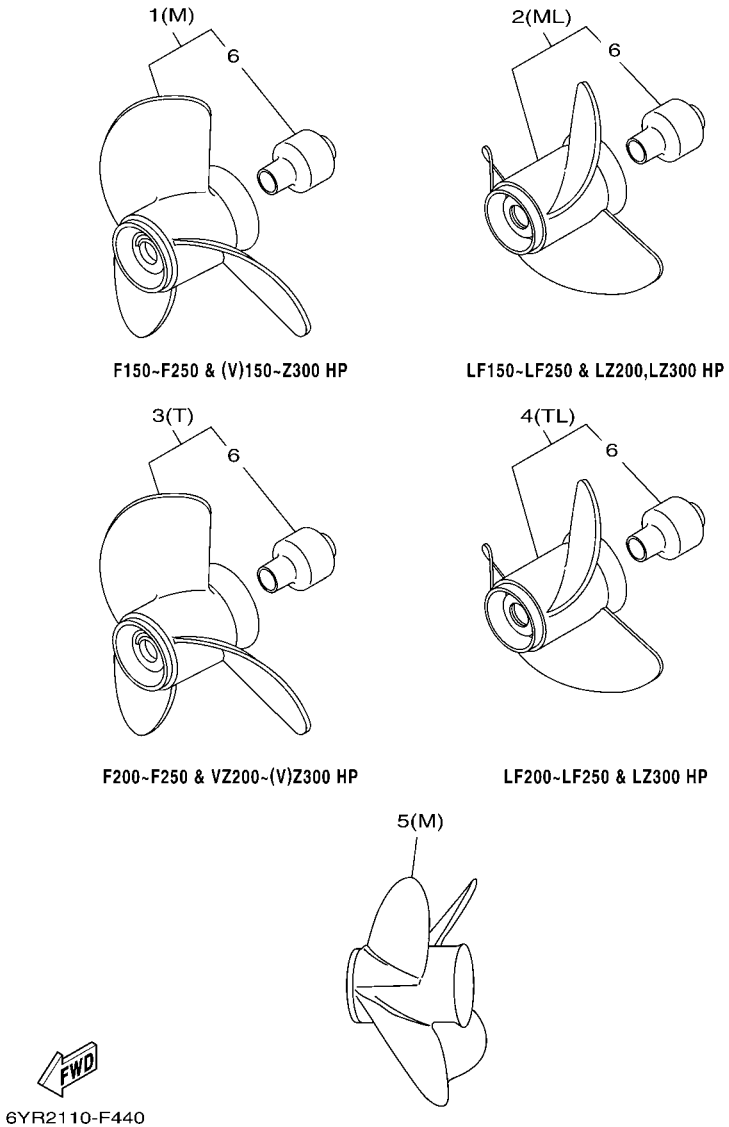

*1: FOR 6G5, 6J9 & 6K1 PROPELLER
*2: FOR 6G5, 66K, 6R4 & 6K1, 6R1 & 61A, 69L, 6D0 & 61B, 6D1 PROPELLER

REF. NO.	PART NO.	DESCRIPTION	USA					REMARKS
3	6D0–45976–00	PROPELLER (3X15-3/4"X15"-T)	1					UR
	6D0–45978–00	PROPELLER (3X15-1/2"X17"-T)	1					UR
	MAR–GYT3B–XL–23	14 5/8X23 HIGHPER V6	1					UR
	MAR–GYT3B–XL–25	14 5/8X25 HIGHPER V6	1					UR
	MAR–GYT3B–XL–27	14 5/8X27 HIGHPER V6	1					UR
4	61B–45972–00–98	PROPELLER (3X14-1/2"X21"-TL)	1					UR
	61B–45974–00–98	PROPELLER (3X14-1/2"X19"-TL)	1					UR
	61B–45978–00–98	PROPELLER (3X15"X17"-TL)	1					UR
	6D1–45970–00	PROPELLER (3X15-1/4"X19"-TL)	1					UR
	6D1–45972–00	PROPELLER (3X15"X21"-TL)	1					UR
	6D1–45976–00	PROPELLER (3X15-3/4"X15"-TL)	1					UR
	6D1–45978–00	PROPELLER (3X15-1/2"X17"-TL)	1					UR
5	MAR–GYT4B–V6–18	4 BLADE 13.75X18V6	1					UR
	MAR–GYT4B–V6–20	4 BLADE 13.75X20V6	1					UR
	MAR–GYT4B–V6–22	4 BLADE 13.75X22V6	1					UR
	MAR–GYT4B–V6–23	4 BLADE 13.75X23V6	1					UR
	MAR–GYT4B–V6–24	4 BLADE 13.75X24V6	1					UR
	MAR–GYT4B–V6–25	4 BLADE 13.75X25V6	1					UR
	MAR–GYT4B–V6–26	4 BLADE V6 13.75X26 PROP	1					UR
6	6G5–45981–00	.DAMPER RUBBER, PROPELLER	1					UR *1
	61A–45981–00	.DAMPER RUBBER, PROPELLER	1					UR *2

FIG. 45 PROPELLERS SPECIAL

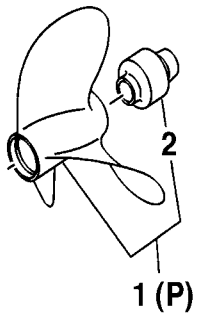

70~225 SPECIAL HP
HIGH PERFORMANCE

6YR1110-E450

REF. NO.	PART NO.	DESCRIPTION	USA					REMARKS
1	6E5–45972–10	PROPELLER (3X14"X24"-P)	1					UR SATIN
	6E5–45976–10	PROPELLER (3X14"X22"-P)	1					UR SATIN
	6E5–45978–10	PROPELLER (3X14"X26"-P)	1					UR SATIN
2	6G5–45981–00	.DAMPER RUBBER, PROPELLER	1					

PART NO.	REF. NO.
6X4–14137–00	10 – 24
	24 – 24
6X4–24364–00	12 – 18
	13 – 19
63D–24364–10	23 – 22
63D–24367–00	12 – 17
	13 – 18
	23 – 25
69W–26301–00	15 – 7
	17 – 7
63D–26301–01	22 – 7
6H1–26301–01	19 – 7
6H3–26301–01	20 – 9
67G–26301–10	12 – 9
	13 – 9
6X4–26367–00	10 – 34
	10 – 37
	24 – 35
	24 – 42
6X4–41291–00	10 – 8
	24 – 8
6X4–42101–01	10 – 1
6X4–42102–00	12 – 1
6X4–42102–10	13 – 1
6X4–42102–20	15 – 1
6X4–42102–30	17 – 1
6X4–42102–40	19 – 1
6X4–42102–50	20 – 1
6X4–42102–60	22 – 1
6X4–42103–01	24 – 1
6X4–42111–01–4D	10 – 2
	24 – 2
6X4–42115–00	10 – 22
	24 – 22
6X4–42119–00	10 – 5
	24 – 5
6X4–42121–00–4D	13 – 3
	19 – 2
	20 – 3
6X4–42121–10–4D	12 – 3
65W–42121–11–4D	24 – 56
63D–42121–22–4D	10 – 49
63D–42126–00	10 – 17
	24 – 17
6X4–42128–00	10 – 13
	24 – 13
6X4–42131–01	10 – 45
	24 – 52

PART NO.	REF. NO.
6X4–42137–00	10 – 7
	24 – 7
6X4–42159–00	10 – 39
	24 – 46
6X4–42177–00	10 – 6
	24 – 6
63D–42508–00	23 – 1
65W–42508–00	26 – 1
6C5–42508–00	16 – 1
692–42508–01	21 – 1
67C–42508–03	18 – 1
67G–42508–10	14 – 1
692–42515–01	21 – 6
663–42518–00	21 – 2
67C–42525–00	16 – 4
	18 – 4
63D–42526–00	23 – 8
6X4–42526–00	14 – 11
63D–42527–00	14 – 6
	23 – 2
65W–42527–00	26 – 3
6C5–42527–00	16 – 2
67C–42527–03	18 – 2
63D–42528–00	14 – 17
	23 – 9
65W–42528–00	16 – 10
	18 – 10
	26 – 10
663–42528–00	21 – 3
63D–42541–00	23 – 4
67G–42541–00	14 – 4
67G–42541–10	14 – 7
63D–42546–00	23 – 3
67G–42546–00	14 – 5
63D–42561–00	23 – 12
65W–42561–00	26 – 7
67C–42561–00	16 – 7
	18 – 7
67G–42561–00	14 – 15
63D–42562–00	23 – 10
65W–42562–00	26 – 6
67C–42562–00	16 – 6
	18 – 6
67G–42562–00	14 – 16
60V–42629–00	32 – 8
6H4–42724–20	22 – 2
6X4–42725–00	10 – 48
	24 – 55

PART NO.	REF. NO.
68V–42725–10	12 – 2
	13 – 2
65W–42725–21	25 – 23
62Y–42725–30	17 – 2
6C5–42725–30	15 – 2
6H3–42725–30	20 – 2
6X4–42728–10	10 – 58
	24 – 65
6X4–42735–00	12 – 16
	13 – 17
6X4–42821–00	9 – 53
	10 – 28
	24 – 28
682–43318–01	14 – 8
	23 – 13
689–43633–00	16 – 8
	18 – 8
	26 – 8
6X4–44100–00	10 – 21
	24 – 21
6X4–44102–00	10 – 23
	24 – 23
6X4–44139–00	10 – 9
	24 – 9
6X4–44159–00–4D	10 – 40
	24 – 47
6X4–44159–10–4D	19 – 12
6X4–44173–00	10 – 41
	19 – 13
	24 – 48
6X4–44177–00	10 – 12
	24 – 12
6X4–44188–00	10 – 15
	24 – 15
6G8–44191–00	10 – 43
	24 – 50
6X3–44191–00	5 – 73
6E0–44191–11	6 – 66
6G1–45616–01	40 – 5
663–45930–00–98	42 – 1
6L6–45930–00–98	43 – 3
688–45930–02–98	43 – 1
6G5–45932–00–98	44 – 1
688–45932–60–98	43 – 1
6G8–45941–00	40 – 3
6G5–45941–00–98	44 – 1
683–45941–00–EL	40 – 7
68S–45941–00–EL	43 – 1

PART NO.	REF. NO.
68U–45941–00–EL	42 – 1
69G–45941–00–EL	40 – 8
6E5–45941–00–EL	43 – 2
6G1–45941–00–EL	40 – 2
663–45941–01–EL	42 – 1
664–45941–01–EL	41 – 1
6E0–45941–01–EL	40 – 1
63V–45941–10–EL	40 – 7
63V–45943–00–EL	40 – 7
683–45943–00–EL	40 – 7
69W–45943–00–EL	42 – 2
6E5–45943–00–EL	43 – 2
6G1–45943–00–EL	40 – 2
6H5–45943–00–EL	42 – 2
6G5–45943–01–98	44 – 1
664–45943–01–EL	41 – 1
6E0–45943–01–EL	40 – 1
63V–45943–10–EL	40 – 7
6K1–45945–00–98	44 – 2
63V–45945–00–EL	40 – 7
664–45945–00–EL	41 – 1
683–45945–00–EL	40 – 7
69W–45945–00–EL	42 – 2
6E0–45945–00–EL	40 – 1
6H5–45945–00–EL	42 – 2
6L5–45945–00–EL	40 – 1
6G5–45945–01–98	44 – 1
6E5–45945–01–EL	43 – 2
63V–45945–10–EL	40 – 7
6K1–45947–00–98	44 – 2
63V–45947–00–EL	40 – 7
683–45947–00–EL	40 – 7
69W–45947–00–EL	42 – 2
6E5–45947–00–EL	43 – 2
6G1–45947–00–EL	40 – 2
6L5–45947–00–EL	40 – 1
6G5–45947–01–98	44 – 1
664–45947–01–EL	41 – 1
6G5–45949–00–98	44 – 1
6E5–45949–00–EL	43 – 2
6L5–45949–00–EL	40 – 1
663–45949–01–EL	42 – 1
664–45949–02–EL	41 – 1
6G5–45952–00–98	44 – 1
664–45952–00–EL	41 – 1
683–45952–00–EL	40 – 7
69W–45952–00–EL	42 – 2
6E5–45952–00–EL	43 – 2

PART NO.	REF. NO.
6G1–45952–00–EL	40 – 2
6H5–45952–00–EL	42 – 2
6L5–45952–00–EL	40 – 1
63V–45952–10–EL	40 – 7
6E5–45954–00–EL	43 – 2
664–45954–01–EL	41 – 1
6E5–45956–00–EL	43 – 2
663–45956–01–EL	42 – 1
6H5–45958–00–EL	42 – 2
663–45958–01–EL	42 – 1
6D0–45970–00	44 – 3
6D1–45970–00	44 – 4
664–45970–00–98	41 – 1
6L6–45970–00–98	43 – 3
6K1–45970–01–98	44 – 2
6G5–45970–02–98	44 – 1
688–45970–03–98	43 – 1
62A–45970–10	43 – 1
69L–45970–20	44 – 3
663–45970–60–98	42 – 1
6R1–45970–A1	44 – 2
6R4–45970–A1	44 – 1
66K–45970–B0	44 – 1
6D0–45972–00	44 – 3
6D1–45972–00	44 – 4
61A–45972–00–98	44 – 3
61B–45972–00–98	44 – 4
664–45972–00–98	41 – 1
6L6–45972–00–98	43 – 3
6K1–45972–01–98	44 – 2
688–45972–02–98	43 – 1
6G5–45972–02–98	44 – 1
62A–45972–10	43 – 1
6E5–45972–10	45 – 1
69L–45972–20	44 – 3
663–45972–60–98	42 – 1
6R1–45972–A0	44 – 2
6R4–45972–A0	44 – 1
66K–45972–B0	44 – 1
61A–45974–00–98	44 – 3
61B–45974–00–98	44 – 4
688–45974–02–98	43 – 1
6K1–45974–02–98	44 – 2
6G5–45974–03–98	44 – 1
62A–45974–10	43 – 1
69L–45974–10	44 – 3
663–45974–60–98	42 – 1
6R1–45974–A0	44 – 2

PART NO.	REF. NO.
6R4–45974–A0	44 – 1
66K–45974–B0	44 – 1
6D0–45976–00	44 – 3
6D1–45976–00	44 – 4
663–45976–00–98	42 – 1
6K1–45976–00–98	44 – 2
688–45976–01–98	43 – 1
6G5–45976–01–98	44 – 1
69L–45976–10	44 – 3
6E5–45976–10	45 – 1
6J9–45976–10	44 – 1
6R1–45976–A0	44 – 2
6R4–45976–A0	44 – 1
6D0–45978–00	44 – 3
6D1–45978–00	44 – 4
61A–45978–00–98	44 – 3
61B–45978–00–98	44 – 4
663–45978–00–98	42 – 1
6K1–45978–02–98	44 – 2
6G5–45978–03–98	44 – 1
6E5–45978–10	45 – 1
688–45978–60–98	43 – 1
6R1–45978–A0	44 – 2
6R4–45978–A0	44 – 1
61A–45981–00	44 – 6
688–45981–00	43 – 5
6G5–45981–00	44 – 6
	45 – 2
664–45981–01	41 – 2
663–45981–10	42 – 3
663–45986–00	42 – 4
688–45986–00	43 – 6
6E7–45986–00	40 – 10
6J8–45986–10–98	41 – 4
701–48101–51	7 – 1
6X0–48111–00	6 – 56
6X3–48111–00	5 – 58
6X0–48116–00	5 – 72
	6 – 68
6X5–48119–00	9 – 61
6X5–48119–10	9 – 60
704–48119–31	3 – 59
704–48119–41	4 – 68
704–48119–B0	2 – 63
6X0–48121–00	5 – 37
	6 – 34
6X0–48127–00	5 – 53
	6 – 51

PART NO.	REF. NO.
6X5–48127–00	9 – 34
EL8–48127–00	2 – 25
	3 – 23
	4 – 23
	5 – 23
	6 – 21
6X5–48127–10	9 – 39
6X5–48127–20	9 – 41
6X0–48128–00	5 – 64
	6 – 62
703–48128–00	9 – 35
704–48128–00	2 – 2
	3 – 2
	4 – 2
	4 – 62
6X0–48129–00	6 – 65
6X3–48129–00	5 – 67
6X5–48129–00	9 – 36
6A5–48129–10	2 – 12
	10 – 27
	24 – 27
701–48130–02	8 – 1
701–48133–00	7 – 40
	8 – 40
6X0–48138–00	5 – 4
	6 – 2
701–48138–50	7 – 39
6X5–48144–00	9 – 29
704–48144–00	2 – 53
6X5–48144–10	9 – 28
704–48144–10	3 – 50
704–48144–20	4 – 50
6X5–48152–00	9 – 6
703–48152–00	1 – 57
701–48152–11	7 – 13
	8 – 13
6X0–48153–00	5 – 47
	6 – 44
703–48153–00	1 – 3
	9 – 22
704–48153–00	2 – 59
	3 – 55
	4 – 55
701–48153–12	7 – 33
	8 – 33
6X4–48154–00	10 – 18
	24 – 18
6X0–48155–00	5 – 60

PART NO.	REF. NO.
6X0–48155–00	6 – 58
6X0–48156–00	5 – 65
	6 – 63
704–48156–00	4 – 63
EL8–48158–00	5 – 30
	6 – 27
EL8–48164–00	2 – 43
	3 – 41
	4 – 41
	5 – 38
	6 – 35
704–48166–00	2 – 60
	3 – 56
	4 – 56
704–48167–01	3 – 61
704–48167–11	4 – 69
6X5–48175–00	9 – 71
6X5–48176–00	9 – 65
704–48176–00	2 – 54
	3 – 51
704–48176–10	4 – 51
704–48178–00	4 – 66
	5 – 34
	6 – 31
704–48178–10	2 – 64
	3 – 60
6X0–48187–00	5 – 11
	6 – 9
703–48189–00	1 – 17
	9 – 19
701–48189–11	7 – 31
	8 – 31
EL8–48191–00	2 – 18
	3 – 16
	4 – 16
	5 – 19
	6 – 17
703–48192–00	2 – 55
	5 – 44
	6 – 41
704–48192–00	2 – 46
	3 – 44
	4 – 44
704–48192–P0	3 – 52
	4 – 52
6X0–48193–00	5 – 63
	6 – 61
704–48193–00	2 – 50

PART NO.	REF. NO.
704–48193–00	5 – 42
	6 – 39
701–48196–11	7 – 7
	8 – 7
701–48197–10	7 – 3
	8 – 3
703–48198–00	1 – 14
	9 – 16
701–48198–10	7 – 15
	8 – 15
704–48205–B1	2 – 1
704–48205–P1	3 – 1
6X3–48206–01	5 – 1
6X0–48206–12	6 – 1
6X5–48207–01	9 – 1
703–48207–17	1 – 1
704–48207–P1	4 – 1
6X0–48211–00	5 – 25
	6 – 72
703–48211–01	1 – 61
703–48212–00	1 – 58
6X5–48213–00	9 – 58
701–48213–00	7 – 19
	8 – 19
703–48213–00	1 – 59
6X5–48214–00	9 – 63
6X5–48214–10	9 – 64
6X0–48215–00	6 – 73
6X4–48215–00	10 – 4
	24 – 4
6X5–48215–00	9 – 80
703–48215–00	1 – 43
704–48215–00	2 – 14
6X5–48215–10	9 – 81
704–48215–20	3 – 12
704–48215–30	4 – 12
6X5–48219–00	9 – 67
703–48219–00	1 – 30
704–48219–B0	2 – 52
704–48219–P0	3 – 49
	4 – 49
6X0–48221–00	6 – 53
6X3–48221–00	5 – 55
6X5–48221–00	9 – 26
701–48221–00	7 – 6
	8 – 6
703–48221–00	1 – 56
6X5–48221–10	9 – 27

PART NO.	REF. NO.
704–48221–B0	2 – 62
704–48221–P0	3 – 58
	4 – 67
6X0–48222–00	6 – 45
6X5–48222–00	9 – 31
701–48222–00	7 – 27
	8 – 27
703–48222–00	1 – 27
6X3–48222–01	5 – 48
6X5–48222–10	9 – 33
6X5–48222–20	9 – 66
6X5–48222–30	9 – 85
704–48222–B0	2 – 34
704–48222–P0	3 – 32
	4 – 32
6X0–48223–00	5 – 54
	6 – 52
703–48223–00	1 – 28
6X5–48224–00	9 – 13
6X0–48225–00	6 – 55
6X3–48225–00	5 – 57
6X5–48225–00	9 – 68
703–48225–00	1 – 29
704–48225–00	6 – 57
6X3–48225–10	5 – 56
6X3–48225–20	2 – 45
	3 – 43
	4 – 43
	5 – 59
703–48226–00	1 – 26
703–48227–00	1 – 24
	5 – 49
	6 – 46
6X5–48228–00	9 – 73
6X5–48229–00	9 – 30
701–48229–00	7 – 26
	8 – 26
6X5–48229–10	9 – 32
704–48229–B1	2 – 37
704–48229–P1	3 – 35
	4 – 35
704–48229–R0	4 – 60
704–48231–00	3 – 25
	4 – 25
EL8–48231–00	2 – 27
	5 – 26
	6 – 23
6X5–48232–00	9 – 2

PART NO.	REF. NO.
701–48232–00	7 – 30
	8 – 30
703–48232–00	1 – 62
EL8–48232–00	2 – 42
704–48232–P1	3 – 40
	4 – 40
704–48233–00	3 – 53
	4 – 53
EL8–48233–00	2 – 56
	5 – 45
	6 – 42
701–48234–00	7 – 5
	8 – 5
703–48234–00	1 – 18
	9 – 20
704–48234–00	3 – 48
	4 – 48
EL8–48234–00	2 – 51
	5 – 43
	6 – 40
701–48235–00	7 – 2
	8 – 2
702–48235–00	2 – 57
	5 – 46
	6 – 43
703–48235–00	1 – 4
	9 – 5
704–48235–00	3 – 54
	4 – 54
701–48236–00	7 – 8
	8 – 8
703–48236–00	1 – 16
	9 – 18
702–48237–00	7 – 9
	8 – 9
702–48238–00	7 – 10
	8 – 10
703–48238–00	1 – 22
	9 – 24
704–48238–00	2 – 41
	3 – 39
	4 – 39
	5 – 36
	6 – 33
EL8–48241–00	3 – 26
	4 – 26
	5 – 27
	6 – 24

PART NO.	REF. NO.
EL8–48241–10	2 – 28
704–48242–00	2 – 44
704–48242–10	3 – 42
	4 – 42
EL8–48242–10	5 – 39
	6 – 36
701–48243–00	7 – 14
	8 – 14
703–48243–00	1 – 15
	9 – 17
703–48244–00	1 – 21
	9 – 23
EL8–48244–00	2 – 32
	3 – 30
	4 – 30
	5 – 32
	6 – 29
6X0–48245–00	6 – 54
703–48245–00	1 – 11
EL8–48245–00	2 – 33
	3 – 31
	4 – 31
	5 – 33
	6 – 30
6X5–48246–00	9 – 62
701–48246–00	2 – 5
	3 – 5
	4 – 5
	7 – 24
	8 – 24
703–48246–00	1 – 23
	9 – 74
701–48248–00	1 – 13
	2 – 40
	3 – 38
	4 – 38
	5 – 35
	6 – 32
	7 – 12
	8 – 12
	9 – 15
701–48249–00	7 – 11
	8 – 11
EL8–48251–00	2 – 3
	3 – 3
	4 – 3
	5 – 2
	6 – 71

PART NO.	REF. NO.
701–48252–00	7 – 4
	8 – 4
703–48252–00	1 – 12
	9 – 14
EL8–48254–00	3 – 27
	4 – 27
	5 – 28
	6 – 25
EL8–48254–10	2 – 29
701–48255–00	7 – 21
	8 – 21
EL8–48259–00	2 – 7
	3 – 7
	4 – 7
	5 – 7
	6 – 5
6X0–48261–00	5 – 18
	6 – 16
6X4–48261–00	10 – 25
	24 – 25
6X5–48261–00	9 – 4
701–48261–00	7 – 37
704–48261–00	2 – 17
	3 – 15
	4 – 15
703–48261–01	1 – 2
701–48261–20	8 – 37
6X0–48262–00	5 – 9
	6 – 7
704–48262–00	2 – 8
	3 – 8
	4 – 8
702–48263–00	5 – 40
	6 – 37
6X0–48264–00	5 – 10
	6 – 8
6X5–48264–00	9 – 8
703–48264–00	1 – 6
704–48264–00	2 – 9
	3 – 9
	4 – 9
6X0–48265–00	5 – 8
	6 – 6
6X5–48265–00	9 – 11
703–48265–00	1 – 9
704–48265–00	2 – 4
	3 – 4
	4 – 4

PART NO.	REF. NO.
701–48266–00	7 – 29
	8 – 29
704–48266–00	2 – 10
	5 – 13
	6 – 11
6X5–48267–00	9 – 43
	9 – 83
701–48268–00	7 – 18
	8 – 18
703–48268–00	1 – 5
	9 – 7
6X5–48271–00	9 – 3
701–48271–00	7 – 34
	8 – 34
703–48271–00	1 – 60
704–48271–00	3 – 22
	4 – 22
EL8–48271–00	5 – 22
	6 – 20
EL8–48271–10	2 – 24
EL8–48279–00	2 – 49
	3 – 47
	4 – 47
	5 – 41
	6 – 38
701–48280–00	7 – 44
	8 – 46
6X0–48281–00	5 – 62
	6 – 60
703–48281–00	1 – 31
704–48281–00	2 – 15
	3 – 13
	4 – 13
	5 – 70
	6 – 14
EL8–48281–00	2 – 13
	3 – 11
	4 – 11
	5 – 16
	6 – 70
701–48281–10	7 – 16
	8 – 16
701–48282–00	7 – 28
	8 – 28
703–48282–00	1 – 32
704–48282–00	2 – 58
701–48283–00	8 – 42
704–48283–00	2 – 19

PART NO.	REF. NO.
704–48283–00	3 – 17
	4 – 17
704–48284–00	2 – 61
703–48284–10	1 – 52
704–48284–P0	3 – 57
	4 – 57
704–48285–10	4 – 65
701–48287–00	1 – 42
	5 – 66
	6 – 64
	7 – 42
	8 – 44
704–48287–00	2 – 22
	3 – 20
	4 – 20
	9 – 46
6X0–48288–00	5 – 52
	6 – 50
702–48288–00	7 – 23
	8 – 23
701–48289–00	7 – 17
	8 – 17
703–48291–10	1 – 39
6X5–48293–00	9 – 87
703–48293–10	1 – 41
6X5–48317–00	9 – 76
6X5–48317–10	9 – 77
6H3–48321–02	24 – 40
63D–48321–10	22 – 4
67C–48321–10	15 – 4
	17 – 4
6H1–48321–10	19 – 4
6H3–48321–10	20 – 6
67G–48321–20	12 – 6
	13 – 6
6H1–48321–20	24 – 33
6X5–48338–00	9 – 78
6X5–48338–10	9 – 79
703–48345–01	1 – 19
	2 – 21
	3 – 19
	4 – 19
	5 – 21
	6 – 19
	7 – 36
	8 – 36
	9 – 21
6X5–48351–00	9 – 54

PART NO.	REF. NO.
6X5–48354–00	9 – 59
6X5–48358–00	9 – 25
701–48358–00	7 – 38
	8 – 38
703–48358–00	1 – 20
	2 – 26
	3 – 24
	4 – 24
	5 – 24
	6 – 22
63D–48538–00	12 – 7
	12 – 10
	13 – 7
	13 – 10
	15 – 5
	15 – 8
	17 – 5
	17 – 8
	19 – 5
	19 – 8
	20 – 7
	20 – 10
	22 – 5
	22 – 8
	24 – 38
	24 – 44
6X4–48538–00	10 – 33
	24 – 34
6X4–48538–10	10 – 36
	24 – 41
6X4–81860–00	13 – 14
	15 – 12
6Y8–81920–01	28 – 2
6Y8–81920–11	28 – 4
6X4–81942–00	11 – 13
	25 – 14
68V–81950–00	28 – 18
	38 – 12
6Y5–81950–02	34 – 21
704–81950–10	4 – 58
	9 – 72
6K1–81980–00	37 – 18
6Y5–82117–00	39 – 11
703–82119–00	38 – 11
6Y5–82149–00	39 – 11
1E6–82151–00	39 – 8
6G1–82151–00	28 – 10
62Y–82361–00	25 – 16

PART NO.	REF. NO.
63D–82361–00	23 – 16
6X5–82507–00	38 – 10
6Y8–82507–00	28 – 19
6X4–82510–00	11 – 1
	25 – 1
6X5–82510–00	38 – 2
6Y8–82510–01	28 – 13
64D–82510–03	36 – 4
6K1–82510–06	37 – 3
704–82510–07	35 – 4
703–82510–43	1 – 44
6Y5–82521–00	39 – 11
6Y8–82521–01	28 – 8
	29 – 4
6Y8–82521–11	28 – 8
	29 – 4
6Y8–82521–21	28 – 8
	29 – 4
6Y8–82521–31	28 – 8
	29 – 4
6Y8–82521–41	28 – 8
	29 – 4
6Y8–82521–51	28 – 8
	29 – 4
703–82531–00	1 – 46
	39 – 12
6K1–82532–00	35 – 6
	36 – 6
	37 – 5
6X4–82540–00	10 – 26
	24 – 26
6X5–82540–00	9 – 47
703–82540–00	1 – 50
704–82540–00	5 – 14
	6 – 12
704–82540–20	2 – 11
	3 – 10
704–82540–30	4 – 10
704–82541–10	5 – 71
	6 – 67
701–82550–51	8 – 39
6Y8–82553–01	28 – 7
6Y8–82553–11	28 – 7
6Y8–82553–21	28 – 7
6R3–82553–30	39 – 6
6Y8–82553–31	28 – 7
6Y8–82553–41	28 – 7
6R3–82553–50	39 – 6

PART NO.	REF. NO.
6Y8–82553–50	28 – 7
6R3–82553–70	39 – 6
6R3–82553–80	39 – 6
682–82556–00	1 – 48
	5 – 69
	11 – 5
	25 – 5
	28 – 16
	35 – 8
	36 – 20
	37 – 7
	38 – 5
6X4–82563–00	11 – 7
	25 – 7
6X0–82563–01	6 – 49
6X3–82563–01	5 – 51
6X5–82563–01	9 – 48
6X5–82563–11	9 – 49
703–82563–12	1 – 55
6X5–82563–21	9 – 50
6X5–82563–31	9 – 51
704–82563–41	2 – 36
	3 – 34
704–82563–51	4 – 34
704–82563–H1	4 – 61
704–82563–J1	4 – 64
6X5–82570–00	38 – 1
6Y8–82570–01	28 – 11
64D–82570–03	36 – 1
6K1–82570–08	37 – 1
704–82570–08	35 – 1
64D–82570–10	36 – 16
64D–82571–00	36 – 2
6X5–82571–00	38 – 6
6Y8–82571–01	28 – 12
6K1–82571–02	37 – 2
704–82571–02	35 – 2
64D–82571–10	36 – 17
64D–82575–00	36 – 19
69W–82575–00	11 – 4
	25 – 4
6K1–82575–00	28 – 15
	37 – 6
6X3–82575–00	5 – 68
6X5–82575–00	38 – 4
688–82575–01	1 – 47
	35 – 7
676–82577–00	11 – 2

PART NO.	REF. NO.
676–82577–00	25 – 2
	28 – 14
	38 – 3
703–82577–00	1 – 45
	35 – 5
	36 – 5
	37 – 4
60V–8257V–00	30 – 10
689–8257Y–00	11 – 6
	25 – 6
64D–82581–00	28 – 20
	35 – 9
	36 – 7
6X5–82581–00	38 – 8
6Y8–82582–01	28 – 5
6Y8–82582–11	28 – 6
6X4–82586–00	17 – 11
	22 – 11
6X4–82586–10	15 – 11
	25 – 10
6X4–82586–20	12 – 13
	13 – 13
6X4–82586–30	19 – 11
	20 – 13
64D–82588–00	36 – 3
6R5–82588–01	35 – 3
64D–82588–10	36 – 18
6X3–8258A–00	35 – 18
	36 – 25
	37 – 23
	39 – 3
703–8258A–00	39 – 1
61B–8258A–01	35 – 18
	36 – 25
	37 – 23
	39 – 3
688–8258A–10	39 – 1
6X3–8258A–10	35 – 18
	36 – 25
	37 – 23
	39 – 3
688–8258A–20	1 – 49
	39 – 1
688–8258A–30	39 – 1
6K1–8258A–40	35 – 18
	36 – 25
	37 – 23
	39 – 3

PART NO.	REF. NO.
688–8258A–50	39 – 3
688–8258A–60	39 – 3
6X5–82590–00	9 – 82
704–82590–10	4 – 59
703–82591–00	1 – 53
	9 – 52
703–82592–00	1 – 54
701–82594–00	8 – 43
703–82594–00	1 – 25
704–82594–00	2 – 35
	3 – 33
	4 – 33
6Y8–83363–00	27 – 2
	27 – 5
	27 – 8
	27 – 11
6R5–83383–00	28 – 17
6X4–83383–00	11 – 10
	25 – 11
	38 – 9
6X5–83383–00	38 – 7
703–83383–02	1 – 51
688–83383–11	35 – 13
	36 – 11
	37 – 12
6X4–83386–00	11 – 11
	25 – 12
6Y8–83500–01	27 – 10
6Y8–83500–11	27 – 15
6Y5–83500–F2	33 – 13
6Y5–83503–00	34 – 27
6Y7–83503–00	34 – 27
6Y7–83503–10	34 – 27
6Y8–8350F–01	27 – 7
6Y8–8350S–01	27 – 4
6Y8–8350T–01	27 – 1
6Y8–8350T–11	27 – 13
6Y5–8350T–90	33 – 1
6Y5–83510–00	34 – 14
6Y7–83510–00	34 – 14
6Y5–83510–10	34 – 14
6Y7–83510–10	34 – 14
6Y5–83514–00	34 – 5
	34 – 18
6Y8–83514–00	27 – 17
6Y5–83517–00	34 – 2
	34 – 15
6Y5–83518–00	34 – 6

PART NO.	REF. NO.
6Y5–83518–00	34 – 10
	34 – 23
	34 – 31
	34 – 33
	34 – 38
6Y5–83523–00	34 – 4
	34 – 17
6Y5–83533–T2	33 – 9
6Y5–83536–00	34 – 11
	34 – 24
	34 – 30
	34 – 34
	34 – 39
6Y5–83536–10	34 – 16
6Y5–83536–40	34 – 3
	34 – 16
6Y7–83540–80	34 – 1
6Y7–83540–90	34 – 1
6Y5–83544–00	34 – 12
	34 – 26
	34 – 28
	34 – 36
6Y8–83553–01	28 – 9
6Y5–83553–F1	33 – 20
	39 – 4
6Y5–83553–N0	39 – 7
688–83557–00	34 – 19
6G5–83557–00	12 – 15
6K3–83557–00	13 – 16
6Y5–83557–10	33 – 12
6Y5–8355X–T1	33 – 5
	33 – 10
	33 – 16
6Y8–8356N–01	28 – 1
6Y5–83570–S5	33 – 6
6Y5–83590–00	34 – 32
6Y7–83590–00	34 – 32
6Y7–83590–10	34 – 32
6K1–83614–01	37 – 8
6Y5–83653–00	39 – 2
6Y5–83653–10	39 – 2
6Y5–83653–20	39 – 2
6Y5–83653–30	39 – 2
6Y5–83653–40	39 – 2
6Y7–83660–10	34 – 37
6Y7–83660–30	34 – 37
688–83664–00	34 – 13
	34 – 25

PART NO.	REF. NO.
688–83664–00	34 – 29
	34 – 35
	34 – 40
688–83665–00	34 – 41
688–83666–00	34 – 44
60V–83667–00	30 – 4
688–83667–00	34 – 43
663–83668–00	34 – 42
	34 – 45
6Y5–8366B–00	30 – 9
	31 – 2
	32 – 2
63P–8366C–00	31 – 4
69J–8366C–00	31 – 3
60V–8366D–00	30 – 2
	32 – 3
6Y7–83670–40	34 – 9
6Y7–83670–50	34 – 9
6Y8–83688–01	29 – 1
6Y8–83688–11	29 – 2
6Y8–83688–20	29 – 3
6Y8–84383–00	27 – 3
	27 – 6
	27 – 9
	27 – 12
	27 – 14
	27 – 16
6Y5–85335–00	39 – 13
6Y5–85335–10	39 – 14
6Y8–85371–01	28 – 3
6R3–85721–30	39 – 5
6R3–85721–50	39 – 5
6R3–85721–80	39 – 5
6Y7–85750–10	34 – 22
6Y7–85750–30	34 – 22
6Y5–85752–01	33 – 18
6K1–85830–01	37 – 13
6Y5–87122–S0	33 – 17
	39 – 9
69J–8A4L0–00	31 – 1
60V–8A4L0–01	30 – 1
60V–8A4L1–01	32 – 1
MAR–GYT3B–02–10	41 – 1
MAR–GYT3B–02–11	41 – 1
MAR–GYT3B–02–12	41 – 1
MAR–GYT3B–02–13	41 – 1
MAR–GYT3B–02–14	41 – 1
MAR–GYT3B–03–12	42 – 1

PART NO.	REF. NO.
MAR–GYT3B–03–13	42 – 1
MAR–GYT3B–03–14	42 – 1
MAR–GYT3B–03–15	42 – 1
MAR–GYT3B–L4–14	43 – 3
MAR–GYT3B–L4–16	43 – 3
MAR–GYT3B–L4–18	43 – 3
MAR–GYT3B–L4–20	43 – 3
MAR–GYT3B–L4–22	43 – 3
MAR–GYT3B–L6–14	44 – 2
MAR–GYT3B–L6–16	44 – 2
MAR–GYT3B–L6–18	44 – 2
MAR–GYT3B–L6–20	44 – 2
MAR–GYT3B–L6–22	44 – 2
MAR–GYT3B–V4–14	43 – 1
MAR–GYT3B–V4–16	43 – 1
MAR–GYT3B–V4–18	43 – 1
MAR–GYT3B–V4–20	43 – 1
MAR–GYT3B–V4–22	43 – 1
MAR–GYT3B–V4–24	43 – 1
MAR–GYT3B–V6–14	44 – 1
MAR–GYT3B–V6–16	44 – 1
MAR–GYT3B–V6–18	44 – 1
MAR–GYT3B–V6–20	44 – 1
MAR–GYT3B–V6–22	44 – 1
MAR–GYT3B–V6–24	44 – 1
MAR–GYT3B–V6–26	44 – 1
MAR–GYT3B–XL–23	44 – 3
MAR–GYT3B–XL–25	44 – 3
MAR–GYT3B–XL–27	44 – 3
MAR–GYT4B–V4–18	43 – 4
MAR–GYT4B–V4–20	43 – 4
MAR–GYT4B–V4–22	43 – 4
MAR–GYT4B–V4–23	43 – 4
MAR–GYT4B–V6–18	44 – 5
MAR–GYT4B–V6–20	44 – 5
MAR–GYT4B–V6–22	44 – 5
MAR–GYT4B–V6–23	44 – 5
MAR–GYT4B–V6–24	44 – 5
MAR–GYT4B–V6–25	44 – 5
MAR–GYT4B–V6–26	44 – 5
6J8–W4591–00–EL	41 – 3
6G1–W4591–01–EL	40 – 4
683–W4591–02–EL	40 – 9
683–W4592–02–EL	40 – 9
90101–12014	10 – 50
	24 – 57
90109–06M50	26 – 4
90109–06M81	32 – 4

PART NO.	REF. NO.
90109–06M88	16 – 3
	18 – 3
90116–10031	13 – 5
	19 – 3
	20 – 4
90116–10175	12 – 4
90119–08M74	14 – 2
90142–05001	10 – 10
	24 – 10
90149–05M05	35 – 14
	36 – 12
	36 – 21
	37 – 19
90158–06002	33 – 19
90161–06M00	23 – 17
90161–06M03	25 – 17
90171–10M07	40 – 11
90175–06003	21 – 5
90185–08057	14 – 14
	21 – 8
90185–10051	12 – 5
	13 – 4
	15 – 3
	17 – 3
	19 – 19
	20 – 5
	22 – 3
	25 – 24
90185–10M01	23 – 11
90185–10M14	14 – 9
	16 – 13
	18 – 13
	26 – 12
90185–12M12	10 – 57
	24 – 64
90201–08M01	14 – 3
	23 – 5
90201–10M02	40 – 6
	40 – 12
90201–10M76	14 – 10
90201–12035	10 – 54
	24 – 61
90202–10M56	16 – 9
	18 – 9
	26 – 9
90206–12M22	10 – 52
	24 – 59
90209–10M26	16 – 11

PART NO.	REF. NO.
90209–10M26	18 – 11
	26 – 11
90386–08032	10 – 16
	24 – 16
90386–12003	10 – 55
	24 – 62
90386–26MA3	10 – 44
	19 – 15
	24 – 51
90387–05M05	16 – 12
	18 – 12
90387–05M11	16 – 14
	18 – 14
	26 – 13
90387–06M26	23 – 20
	25 – 20
90387–12M02	10 – 53
	24 – 60
90430–14115	30 – 5
	31 – 5
90445–07017	32 – 6
90445–07018	30 – 6
90447–07013	32 – 7
90447–07015	30 – 7
90447–22006	25 – 21
90447–22007	12 – 14
	13 – 15
90464–08M07	11 – 3
	25 – 3
90464–09M42	12 – 12
	13 – 12
	15 – 10
	17 – 10
	19 – 10
	20 – 12
	22 – 10
	24 – 36
90465–11M10	30 – 8
	32 – 5
	33 – 11
	34 – 20
	39 – 10
90465–13M24	12 – 21
	13 – 22
	25 – 22
90465–13M30	12 – 22
	13 – 23
90465–13M36	15 – 13

PART NO.	REF. NO.
90465–13M36	17 – 12
	19 – 18
	20 – 14
	23 – 21
	25 – 15
90468–10005	12 – 8
	12 – 11
	13 – 8
	13 – 11
	15 – 6
	15 – 9
	17 – 6
	17 – 9
	19 – 6
	19 – 9
	20 – 8
	20 – 11
	22 – 6
	22 – 9
	24 – 39
	24 – 45
90501–23215	10 – 14
	24 – 14
91490–20010	10 – 11
	10 – 20
	24 – 11
	24 – 20
92780–06020	2 – 30
	3 – 28
	4 – 28
	5 – 29
	6 – 26
92780–06025	7 – 20
	8 – 20
92903–05100	28 – 22
	35 – 11
	36 – 9
92990–04100	33 – 3
	33 – 7
	33 – 14
92990–04300	6 – 69
92990–05100	34 – 8
	35 – 16
	36 – 14
	36 – 23
	37 – 10
	37 – 21
92990–05200	9 – 84

PART NO.	REF. NO.
92990–05300	2 – 38
	3 – 36
	4 – 36
	5 – 61
	6 – 59
	9 – 70
92990–05600	35 – 17
	36 – 15
	36 – 24
	37 – 22
92990–06100	16 – 5
	18 – 5
	26 – 5
	37 – 16
92990–06300	2 – 48
	3 – 46
	4 – 46
	7 – 25
	8 – 25
92990–06600	11 – 9
	25 – 9
	37 – 17
92990–08200	9 – 38
92990–08600	1 – 34
	9 – 69
	21 – 7
	23 – 7
92990–10600	5 – 6
	6 – 4
92990–12200	10 – 51
	24 – 58
92990–12600	10 – 56
	24 – 63
92995–05600	16 – 16
	18 – 16
92995–06100	23 – 15
92995–06600	10 – 32
	10 – 47
	12 – 20
	13 – 21
	23 – 19
	23 – 24
	24 – 32
	24 – 54
	25 – 19
	30 – 12
	32 – 10
92995–08600	10 – 30

PART NO.	REF. NO.
92995–08600	14 – 13
	19 – 17
	24 – 30
93430–06024	1 – 10
	2 – 6
	3 – 6
	4 – 6
	5 – 5
	6 – 3
	7 – 35
	8 – 35
	9 – 12
93700–06M03	10 – 3
	24 – 3
	26 – 2
95303–05700	28 – 23
	35 – 12
	36 – 10
95380–04600	33 – 4
	33 – 8
	33 – 15
95380–05600	1 – 7
	2 – 23
	3 – 21
	4 – 21
	9 – 9
	16 – 17
	18 – 17
	34 – 7
	35 – 15
	36 – 13
	36 – 22
	37 – 11
	37 – 20
95380–06600	1 – 40
	2 – 39
	3 – 37
	4 – 37
	5 – 12
	6 – 10
	7 – 43
	8 – 45
	9 – 75
	10 – 19
	24 – 19
	37 – 15
95780–06300	9 – 44
95895–06025	30 – 3

PART NO.	REF. NO.
97080–06035	21 – 4
97095–05020	16 – 15
	18 – 15
97095–06014	10 – 35
	10 – 38
	11 – 12
	24 – 37
	24 – 43
	25 – 13
97095–06016	12 – 19
	13 – 20
	23 – 14
	23 – 23
	30 – 11
	32 – 9
97095–06030	10 – 31
	24 – 31
97095–06035	23 – 18
	25 – 18
97095–08025	14 – 12
97095–08040	10 – 29
	19 – 16
	24 – 29
97095–08050	23 – 6
97303–05012	28 – 21
	35 – 10
	36 – 8
97380–05025	1 – 8
	9 – 10
97380–06018	2 – 20
	3 – 18
	4 – 18
	5 – 20
	6 – 18
97380–08030	1 – 33
	9 – 37
97390–06018	7 – 22
	8 – 22
97595–05516	26 – 14
97780–05130	9 – 57
97780–60920	10 – 42
	19 – 14
	24 – 49
97880–06016	11 – 8
	25 – 8
97885–06016	10 – 46
	24 – 53
97890–05016	2 – 65

PART NO.	REF. NO.
97890–05016	3 – 62
	4 – 70
	5 – 3
97890–05025	2 – 16
	3 – 14
	4 – 14
	5 – 17
	6 – 15
97890–06018	2 – 47
	3 – 45
	4 – 45
97890–06035	5 – 64
	6 – 62
98580–03015	1 – 38
	5 – 15
	6 – 13
	9 – 42
98580–04006	1 – 36
	5 – 31
	6 – 28
	9 – 40
98580–04010	1 – 35
	6 – 48
98580–05008	5 – 50
	6 – 47
98580–05010	1 – 37
	7 – 32
	8 – 32
	9 – 55
98580–05012	9 – 56
	9 – 86
98580–05020	7 – 41
	8 – 41
98580–05040	9 – 57
98780–04010	9 – 45
98780–05018	2 – 31
	3 – 29
	4 – 29
98980–05010	37 – 9
98980–06020	37 – 14
9E450–04533	33 – 2