MID-SECTION

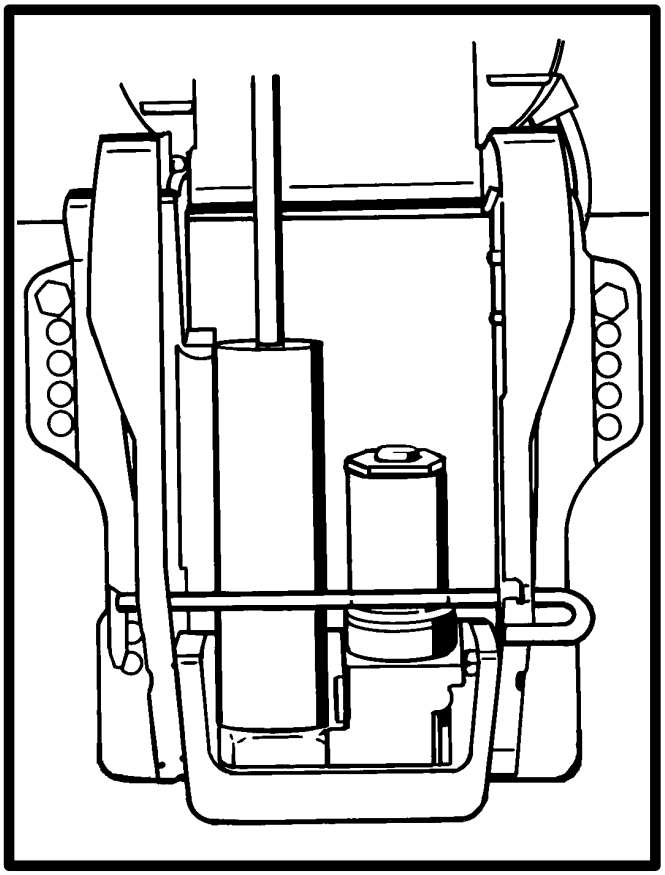

MANUAL TILT SYSTEM (DESIGN 4)

5

G

Table of Contents

	Page
Special Tools	5G-1
Tilt Up	5G-5
Tilt Down	5G-7
Slow Tilt Down Under High Thrust	5G-9
Under Water Strike with Valves Open	5G11
Shock Function with Valves Closed	5G-13
Shock Function Return	5G-15
Hydraulic System Troubleshooting	5G-16
Manual Tilt System Removal	5G-17
Manual Tilt System Disassembly	5G-18
Accumulator Removal	5G-18
Shock Rod Removal	5G-19
Shock Rod Disassembly	5G-20
Valve Block Removal	5G-22
Memory Piston Removal	5G-22
Valve Block Disassembly	5G-23
Actual O-ring Sizes	5G-25
O-ring Description and Sizes	5G-26

	Page
Manual Tilt System Cleaning and Inspection	5G-27
Manual Tilt System Reassembly	5G-27
Cam Shaft Reassembly	5G-27
Valve Body Check Reassembly	5G-27
Velocity Valve Reassembly	5G-27
Check Retainer Reassembly	5G-28
Valve Plug Reassembly	5G-28
Valve Block Installation	5G-28
Shock Rod Reassembly	5G-29
Shock Rod Installation and Fluid Filling Procedure	5G-30
Instructions for Making Retaining Tool	5G-32
Bleeding Manual Tilt System	5G-33
Manual Tilt System Installation	5G-35
Manual Release Valve Adjustment	5G-36

Special Tools

1. Spanner Wrench P/N 91-74951

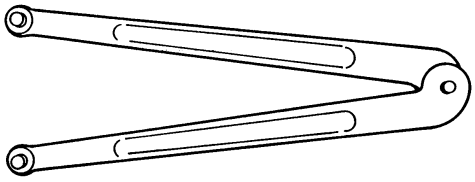

2. Lock-Ring Pliers P/N 91-822778A3

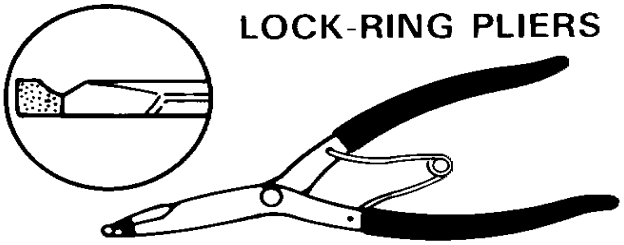

MANUAL TILT COMPONENTS

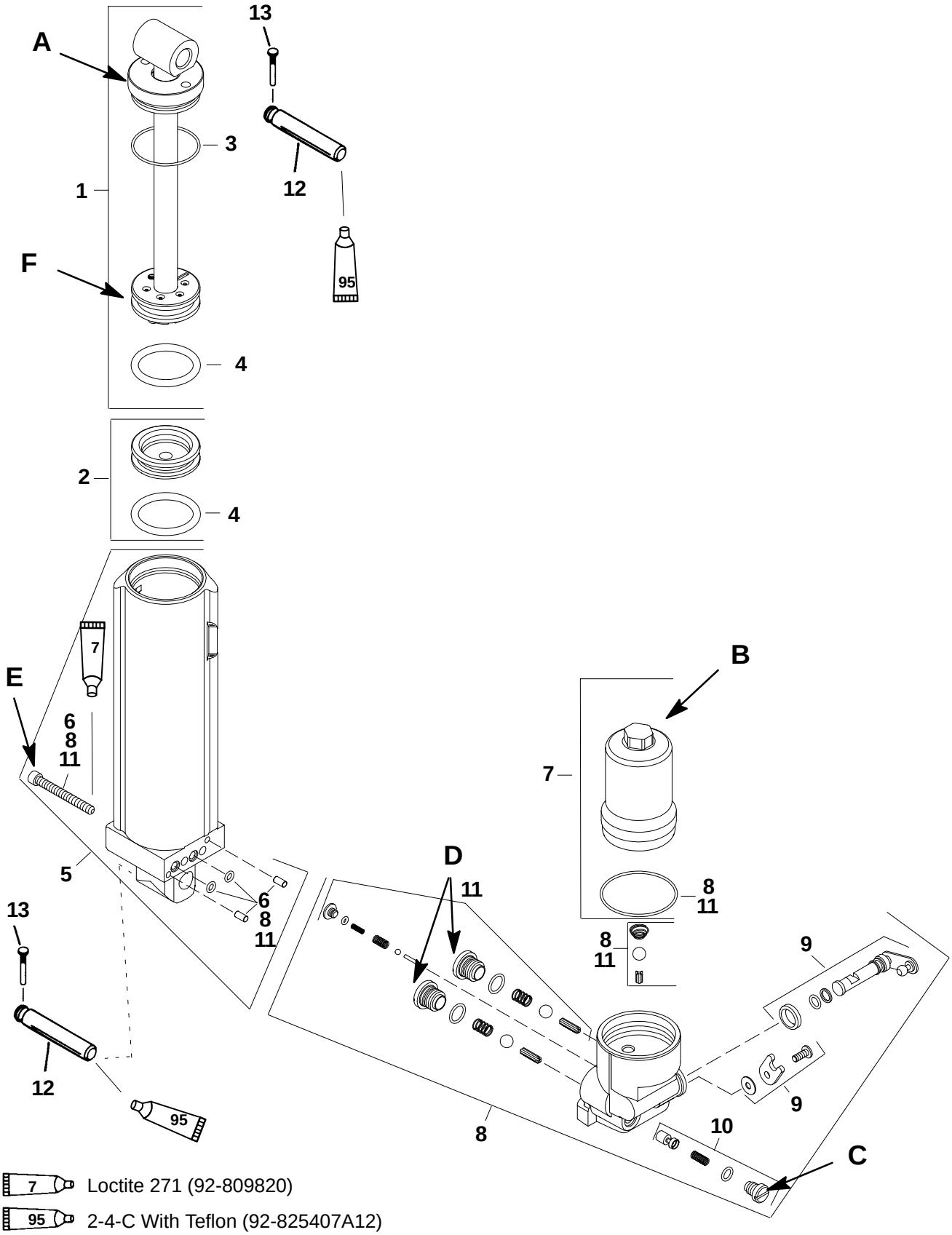

7 Loctite 271 (92-809820)

95 2-4-C With Teflon (92-825407A12)

NOTE: *Lubricate all O-rings using Quicksilver Power Trim and Steering Fluid. If not available, use automotive (ATF) automatic transmission fluid.*

NOTE: *It is recommended that all O-rings be replaced when servicing tilt system.*

MANUAL TILT COMPONENTS

REF. NO.	QTY.	DESCRIPTION	TORQUE		
			lb. in.	lb. ft.	N·m
–	1	MANUAL TRIM ASSEMBLY			
–	1	MANUAL TRIM **BEACHING** ASSEMBLY			
1	1	SHOCK ROD ASSEMBLY		45	61
	1	SHOCK ROD ASSEMBLY **(BEACHING)**			
2	1	MEMORY PISTON ASSEMBLY			
3	1	O RING REBUILD KIT-Cylinder			
4	2	O RING			
5	1	CYLINDER ASSEMBLY			
6	1	SCREW AND SEAL KIT			
7	1	ACCUMULATOR ASSEMBLY		35	47
8	1	VALVE BODY ASSEMBLY			
9	1	CAM KIT			
10	1	VELOCITY VALVE KIT	75		8.5
11	1	CHECK SYSTEM REPAIR KIT	75		8.5
–	1	O RING KIT			
12	2	PIN			
13	2	GROOVE PIN			

A – Torque cylinder cap to 45 lb. ft. (61 N·m)

B – Torque Accumulator to 35 lb. ft. (47 N·m)

C – Torque Velocity Valve to 75 lb. in. (8.5 N·m)

D – Torque Transfer Valve Plug to 75 lb. in. (8.5 N·m)

E – Torque Screw to 100 lb. in. (11 N·m)

F – Torque Shock Piston to 90 lb. ft. (122 N·m)

MANUAL TRIM FLOW DIAGRAMS

Up Circuit

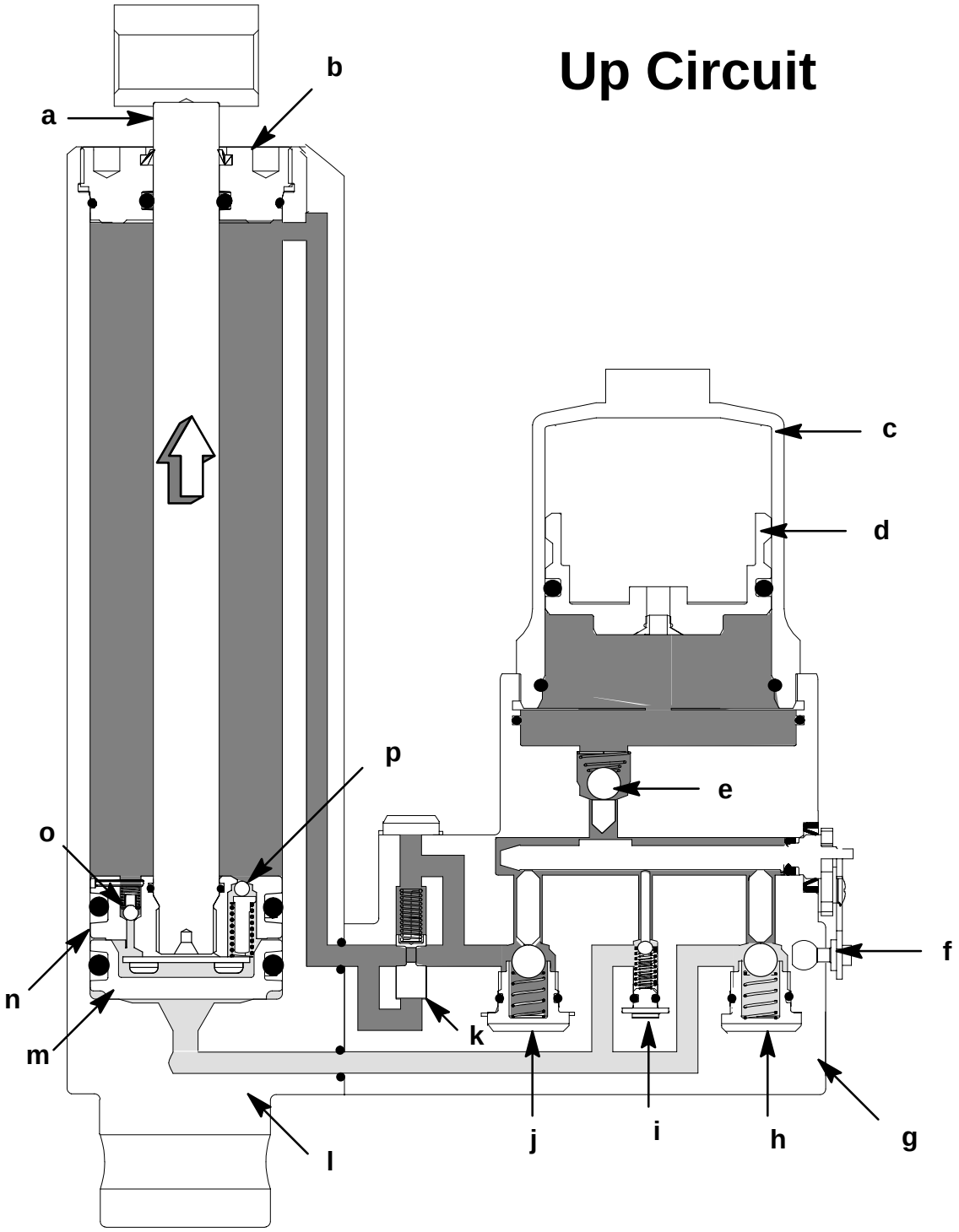

a - Shock Rod
b - End Cap
c - Accumulator
d - Accumulator Piston
e - Accumulator Check Valve
f - Camshaft Lever
g - Manifold
h - Down Fast Transfer Valve

i - Down Slow Transfer Valve
j - Up Fast Transfer Valve
k - Surge Valve
l - Cylinder
m - Memory Piston
n - Shock Piston
o - Shock Return Valve
p - Impact Relief Valve

Tilt Up

With the engine in the down position, the accumulator piston (d) will be at the top of the accumulator (c) with the gas at maximum pressure. To raise the engine, the camshaft lever (f) is rotated all the way down. The internal shaft connected to the camshaft lever will move the push rods, opening the accumulator check valve (e), both fast transfer valves (h & j) and the down slow transfer valve (i). As the operator lifts the engine; oil, under pressure inside the accumulator, will flow around both the slow transfer valve (i) and the down circuit fast transfer valve (h). Oil flows into the bottom of the tilt cylinder forcing the memory piston (m) into the shock piston (n) and then forcing the shock rod (a) up and out. Oil above the shock piston exits the cylinder (l) through an interconnecting passage along side of the cylinder and returns into the manifold (g). Inside the manifold the oil flows past the groove in the surge valve (k), through the transfer valve (j) and mixes with the oil flowing from the accumulator into the up cavity. With the engine in the correct position, the camshaft lever (f) is rotated up and the push rods allow the check valves (e, h, i, & j) to close. The closed check valves prevent the oil from traveling between cavities and locks the engine into position.

Down Circuit

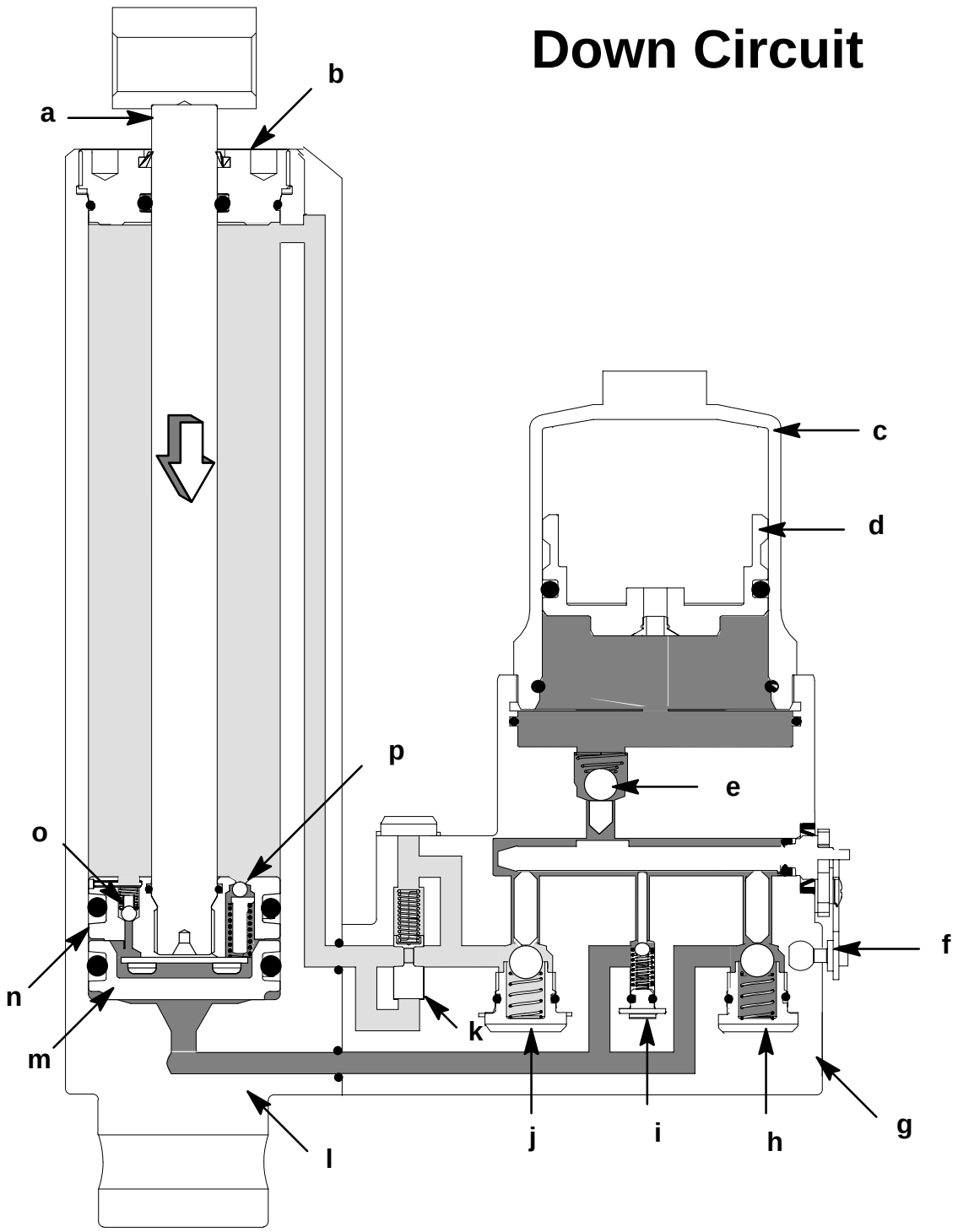

a - Shock Rod
b - End Cap
c - Accumulator
d - Accumulator Piston
e - Accumulator Check Valve
f - Camshaft Lever
g - Manifold
h - Down Fast Transfer Valve

i - Down Slow Transfer Valve
j - Up Fast Transfer Valve
k - Surge Valve
l - Cylinder
m - Memory Piston
n - Shock Piston
o - Shock Return Valve
p - Impact Relief Valve

Tilt Down

With the engine tilted up, the piston inside the accumulator piston (d) will be at the bottom of the accumulator (c) and the gas pressure is low. To lower the engine, the camshaft lever (f) is rotated down, the internal cam will cause the push rods to open the accumulator check valve (e), both fast transfer valves (h & j) and the down slow transfer valve (i). The operator will have to press down on the engine cowl to overcome the pressure inside cylinder. Fluid will flow out of the bottom of the cylinder, past both the down fast transfer valve (h) and down slow transfer valve (i). Fluid will flow past the up fast transfer valve (j), surge valve (k) and through the interconnecting passage into the top of the cylinder (l). Due to the shock rod (a), the tilt cylinder cavities differ in volume, the extra fluid from the up cavity [forced into the accumulator (c)] will cause the internal accumulator piston (d) to compress the gas. With the engine in the correct position, the camshaft lever is rotated up and the push rods allow the check valves (e, h, i, & j) to close.

Slow Tilt Down Under High Thrust

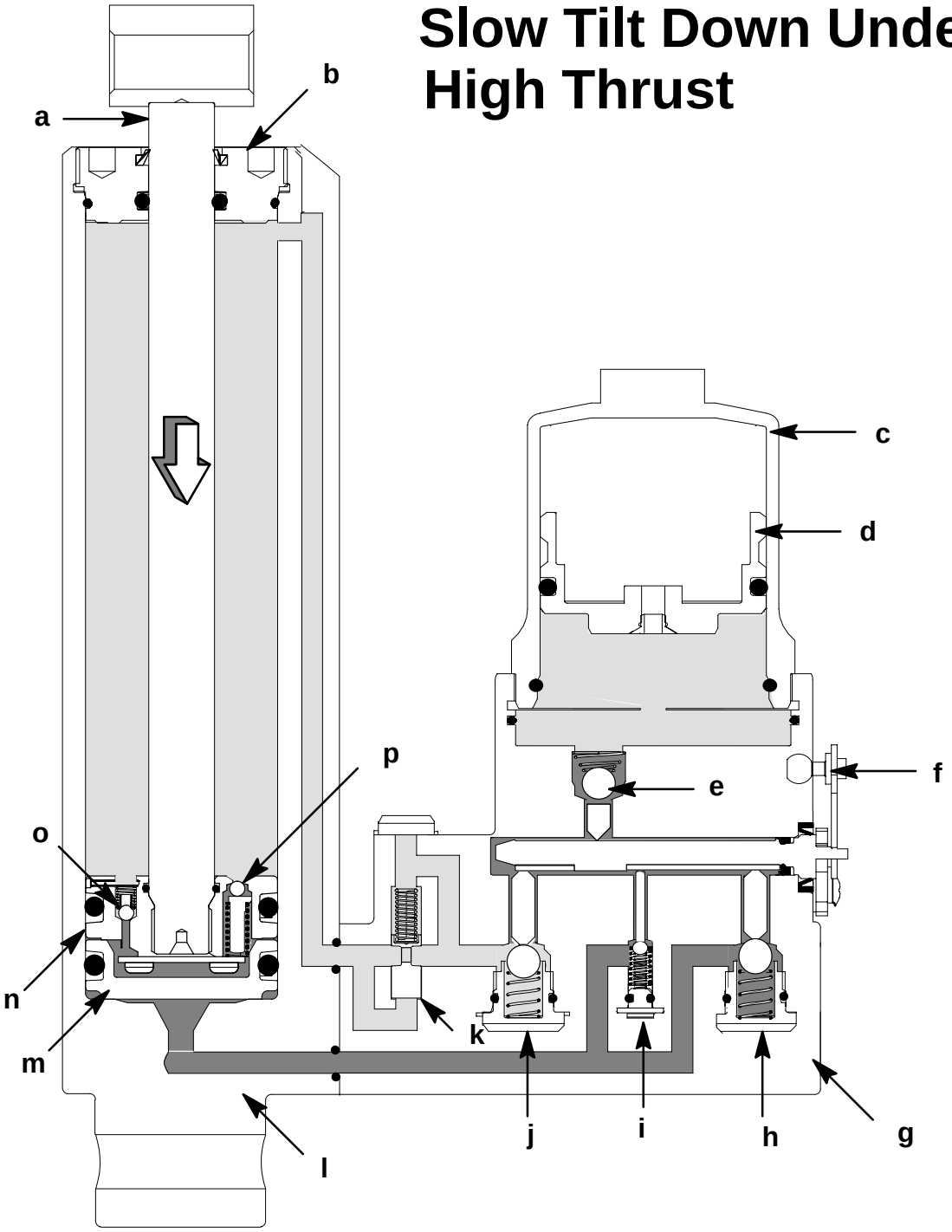

a - Shock Rod
b - End Cap
c - Accumulator
d - Accumulator Piston
e - Accumulator Check Valve
f - Camshaft Lever
g - Manifold
h - Down Fast Transfer Valve

i - Down Slow Transfer Valve
j - Up Fast Transfer Valve
k - Surge Valve
l - Cylinder
m - Memory Piston
n - Shock Piston
o - Shock Return Valve
p - Impact Relief Valve

Slow Tilt Down Under High Thrust

To tilt the engine down under high thrust conditions [where the propeller thrust forces the shock rod down, creating higher pressure below the memory piston (m)] the camshaft lever (f) is rotated slightly downward. The internal shaft connected to the lever will open the down slow transfer valve (i) allowing oil under pressure into the cavity around the shaft. The higher oil pressure will open the up fast transfer valve (j) allowing oil from the bottom of the cylinder to flow above the shock piston (n) while lowering the engine. Additional oil will flow into the accumulator (c) as the internal pressure forces the accumulator check valve (e) to open. Oil flowing into the accumulator moves the accumulator piston (d) and compresses the gas.

Under Water Strike (Valves Open)

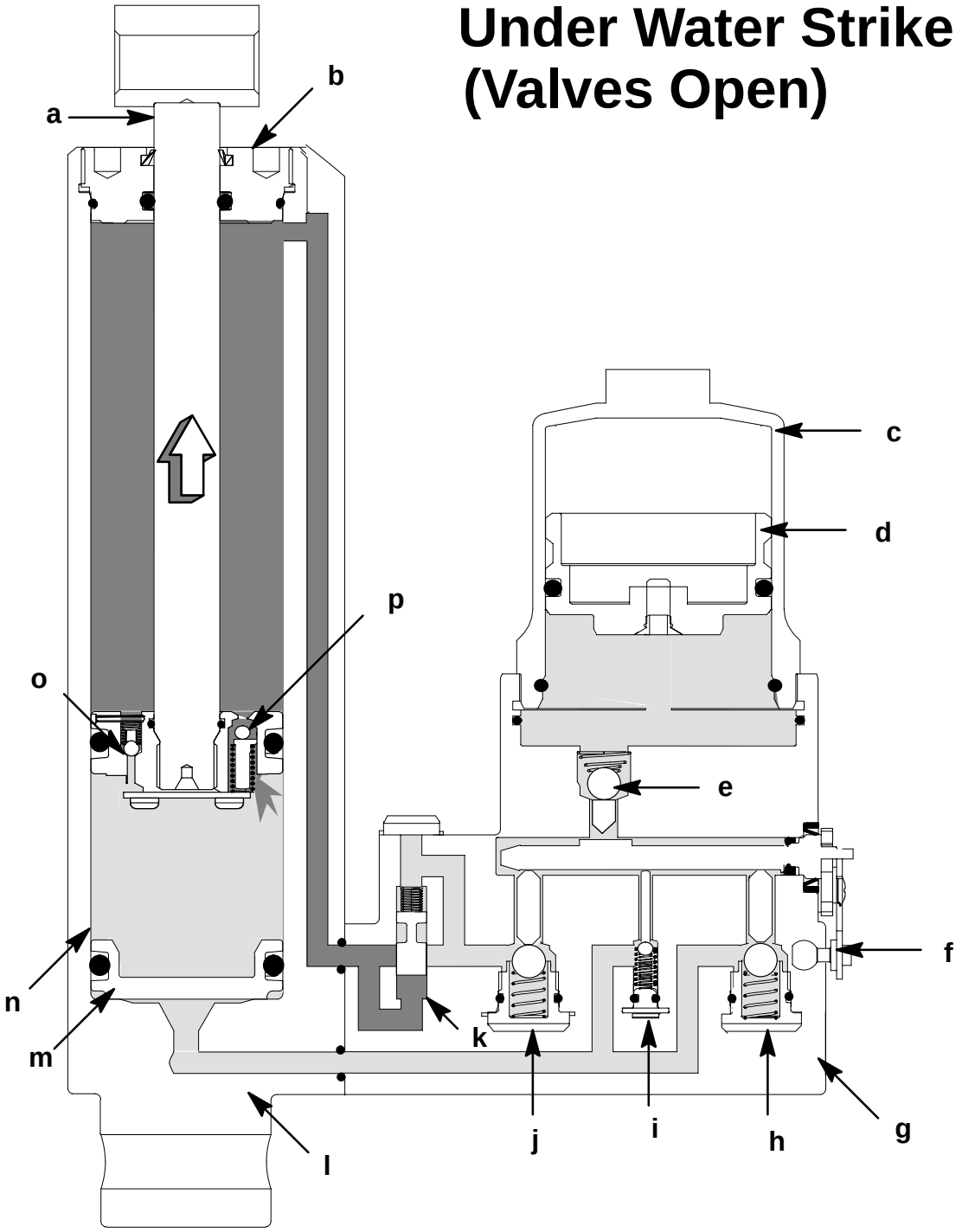

a - Shock Rod
b - End Cap
c - Accumulator
d - Accumulator Piston
e - Accumulator Check Valve
f - Camshaft Lever
g - Manifold
h - Down Fast Transfer Valve

i - Down Slow Transfer Valve
j - Up Fast Transfer Valve
k - Surge Valve
l - Cylinder
m - Memory Piston
n - Shock Piston
o - Shock Return Valve
p - Impact Relief Valve

Under Water Strike With Valves Open

Should the drive unit strike a submerged object while in forward motion, the shock rod (a) will extend from the tilt cylinder (l). Fluid will attempt to exit the cylinder through the interconnecting passage. The rapid fluid flow will increase the pressure below the surge valve (k), causing the valve to move, closing the oil return passage back into the accumulator (c). Oil inside the up cavity is locked in a static position by the closed up fast transfer valve (j), the closed down slow transfer valve (i) and down fast transfer valve (h). As the shock rod extends outward, the pressure inside the up cavity will reach sufficient pressure to open the shock valve (p) which opens at 880-1110 psi. Oil will flow into the cavity created as the shock rod & shock piston (a & n) moves away from the memory piston (m).

Shock Function (Valve Closed)

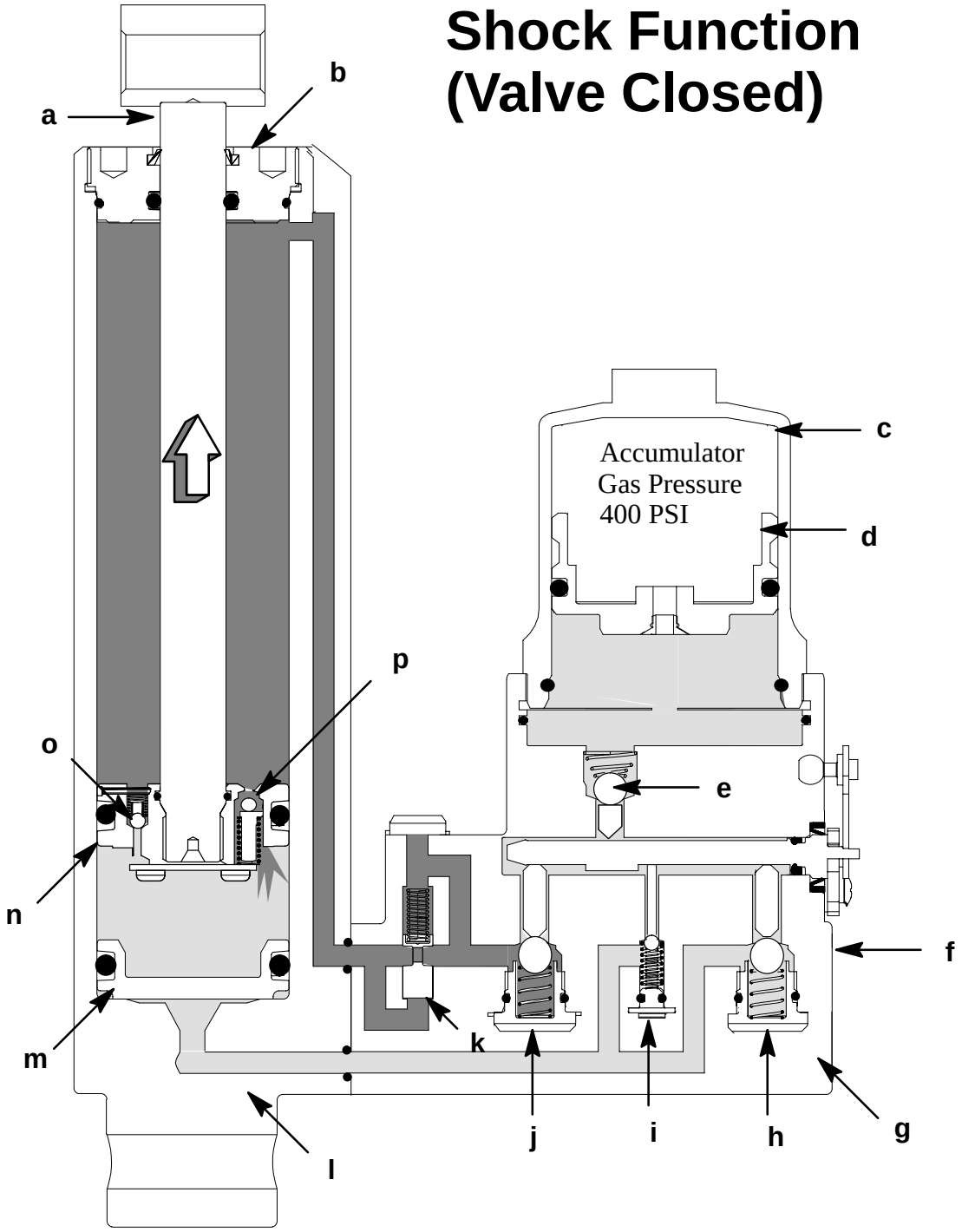

a - Shock Rod
b - End Cap
c - Accumulator
d - Accumulator Piston
e - Accumulator Check Valve
f - Camshaft Lever
g - Manifold
h - Down Fast Transfer Valve

i - Down Slow Transfer Valve
j - Up Fast Transfer Valve
k - Surge Valve
l - Cylinder
m - Memory Piston
n - Shock Piston
o - Shock Return Valve
p - Impact Relief Valve

Shock Function With Valves Closed

Should the drive unit strike a submerged object while in forward motion, the shock rod (a) will extend from the cylinder (l). Oil inside the up cavity is locked in a static position by the closed up fast transfer valve (j), the closed down slow transfer valve (i) and closed down fast transfer valve (h). Fluid will attempt to exit the cylinder through the interconnecting passage back into the accumulator (c). The closed up fast transfer valve (j) will prevent the fluid return. As the shock rod extends outward, the pressure inside the up cavity will reach sufficient pressure to open the shock valve (p) which opens at 880-1110 psi. Oil will flow into the cavity created as the shock rod & shock piston (a & n) moves away from the memory piston (m).

Shock Function Return

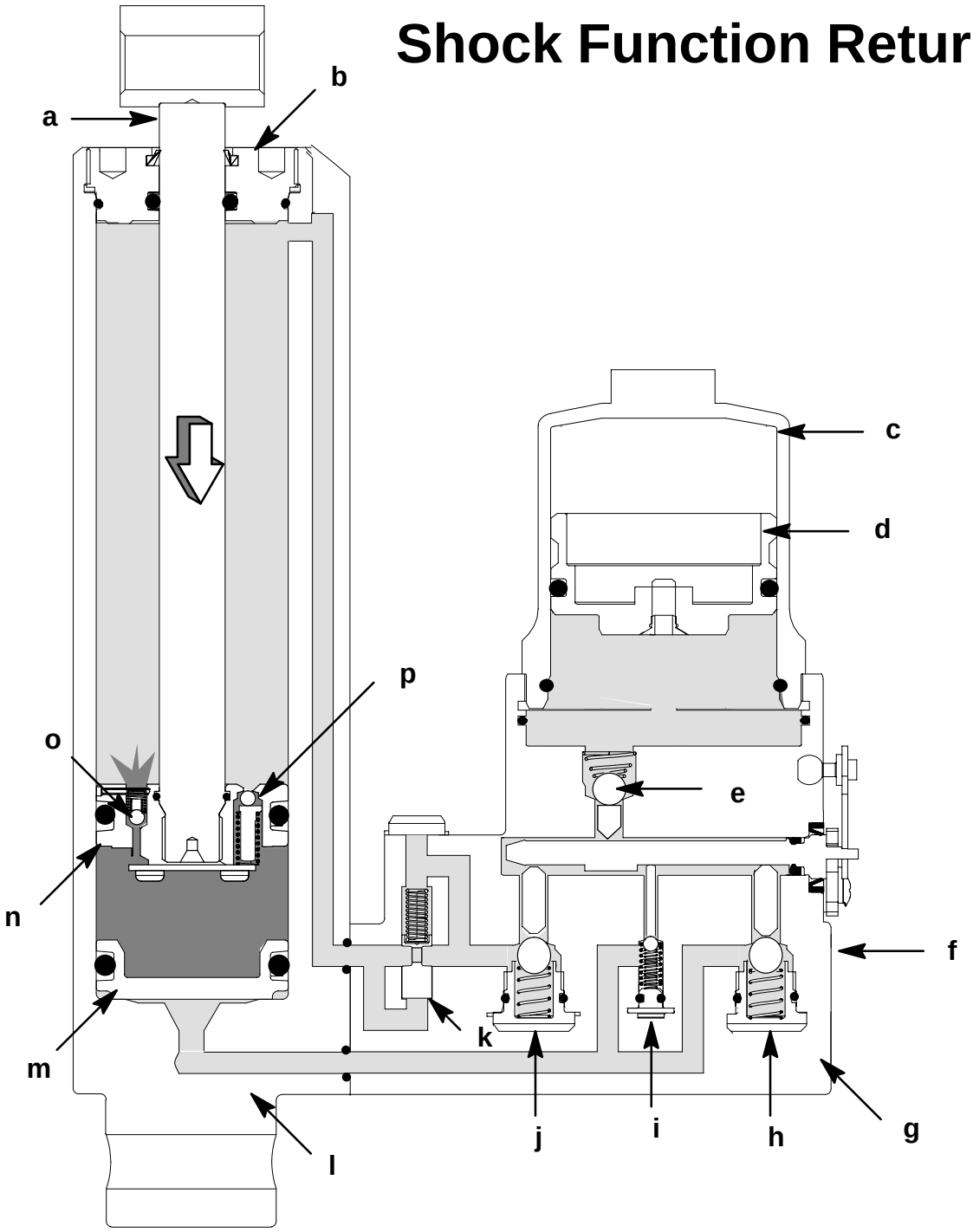

a - Shock Rod
b - End Cap
c - Accumulator
d - Accumulator Piston
e - Accumulator Check Valve
f - Camshaft Lever
g - Manifold
h - Down Fast Transfer Valve

i - Down Slow Transfer Valve
j - Up Fast Transfer Valve
k - Surge Valve
l - Cylinder
m - Memory Piston
n - Shock Piston
o - Shock Return Valve
p - Impact Relief Valve

Shock Function Return

After the drive clears the object, the shock return valve (o) will allow the oil to flow from between the shock piston (n) and memory piston (m) onto the down cavity as the drive returns to its original running position.

Hydraulic System Troubleshooting

Refer to disassembly/reassembly instructions (following) if disassembly is required when servicing.

IMPORTANT: After debris or failed components have been found (during troubleshooting procedure), it is recommended that unit be disassembled completely and ALL O-rings be replaced. Check ball components and castings must be cleaned using engine cleaner and compressed air or replaced prior to reassembly.

Support outboard with tilt lock lever when servicing manual tilt system.

1. Check manual release cam adjustment. Cam must open and close freely. Adjust cam link rod as necessary.

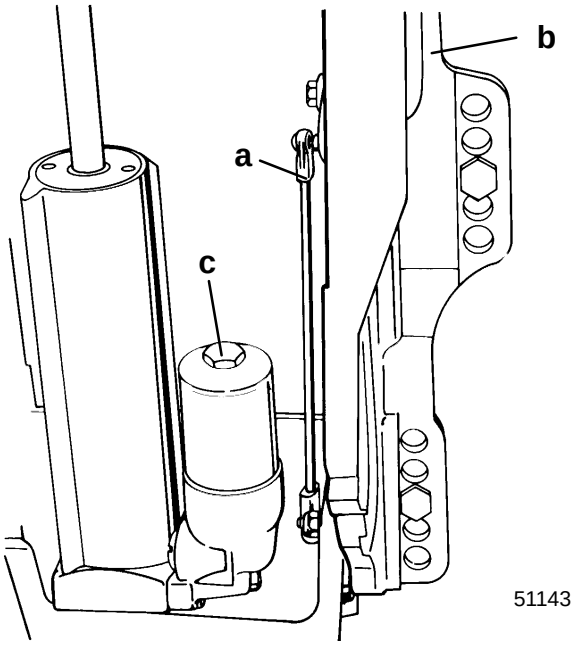

a - Link Rod
b - Manual Release Lever
c - Accumulator

2. Check for external leaks in the manual tilt system. Replace defective part(s) if leak is found.

IMPORTANT: If cut or damaged O-rings are found, inspect machined surfaces for scoring, burrs or debris.

3. Check for discharged accumulator. 35 to 50 lb. ft. (47-68 N·m) of pulling force must be attained when tilting outboard from full “down” to full“up” position. If more than 50 lb. ft. (68 N·m) of force is required, replace accumulator.

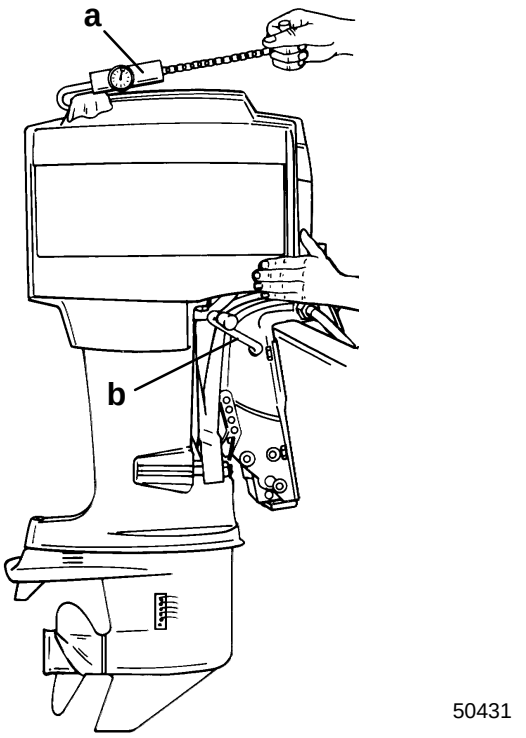

a - Weight Scale
b - Valve Lever (open position)

Manual Tilt System Removal

⚠ CAUTION

Remove cowling and remove all spark plug leads from spark plugs to prevent accidental starting while servicing outboard.

⚠ WARNING

Service or installation of the tilt system may result in loss of pressure in the shock cylinder. If the outboard is not in the full down position, such loss of pressure will cause the engine to fall to the full down position with a potential for damaging engine or causing personal injury. To avoid such injury support outboard in the up position using tilt lock lever.

⚠ WARNING

Manual tilt system is pressurized. Accumulator must be removed when shock rod is in the full up position, prior to servicing, otherwise oil spray-back may occur.

1. Support outboard in the up position using tilt lock lever.
2. Remove link rod.

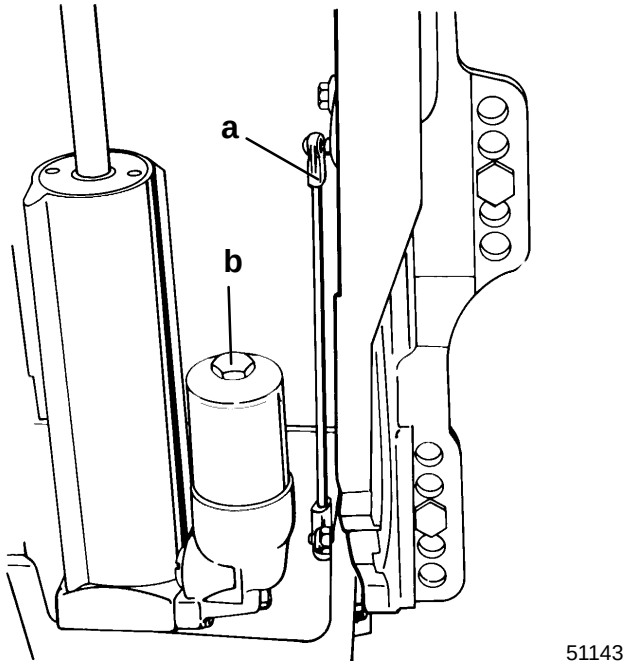

a - Link Rod
b - Accumulator

3. Position piece of wood under transom bracket instead of tilt lock for access of removing pin. Use suitable punch to remove (DRIVE DOWN) upper dowel pin. Retain dowel pin.

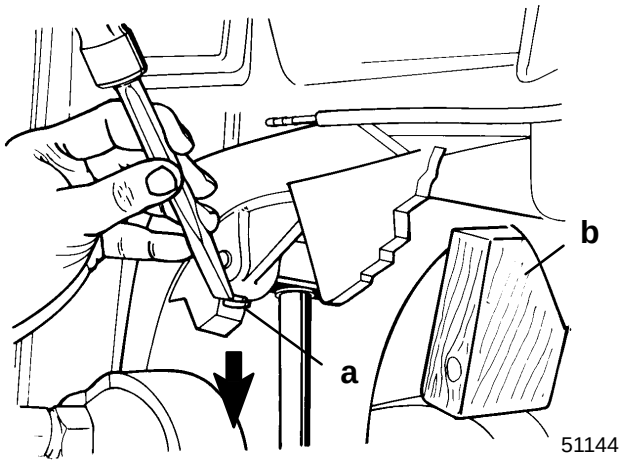

a - Dowel Pin
b - Wood

4. Position tilt lock and remove piece of wood. Use suitable punch to drive out upper pivot pin.

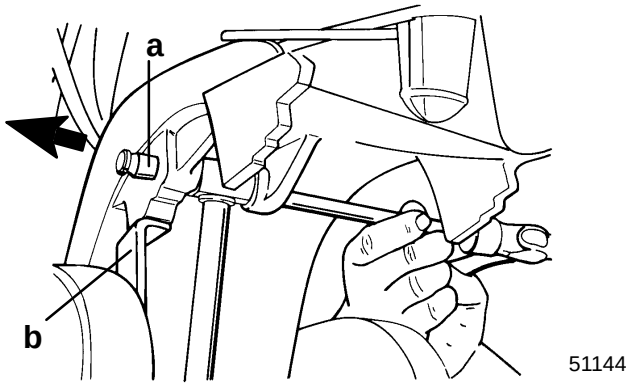

a - Pivot Pin
b - Tilt Lock

5. Use punch to remove (DRIVE UP) lower dowel pin. Retain dowel pin.

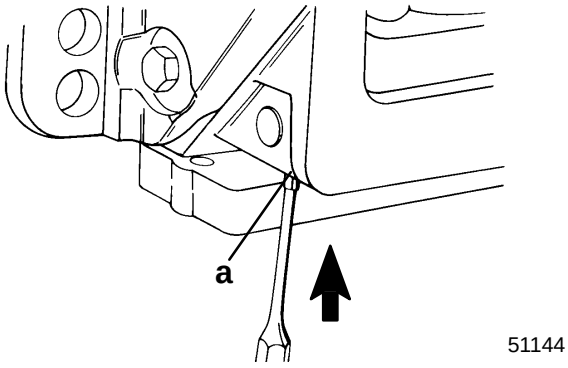

a - Dowel Pin

6. Use suitable punch to drive out lower pivot pin.

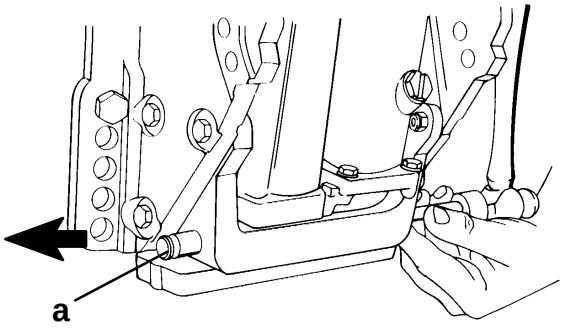

51144

a - Pivot Pin

7. Tilt shock absorber assembly (TOP FIRST) out from clamp bracket and remove assembly.

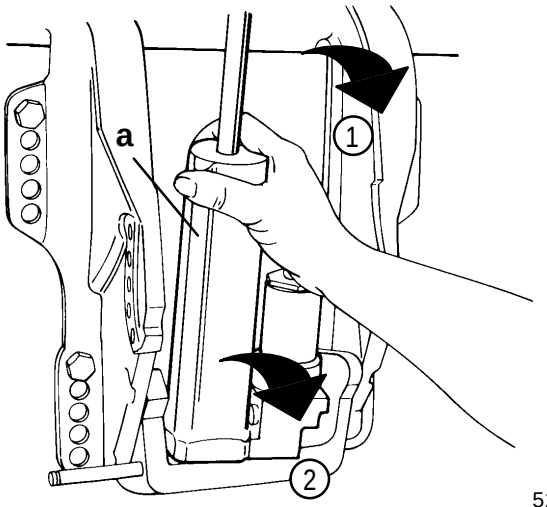

51144

a - Manual Tilt System

Manual Tilt System Disassembly

NOTE: *Accumulator contains a high pressure nitrogen charge and is NOT SERVICEABLE. Replace if necessary.*

⚠ WARNING

This tilt system is pressurized. Remove accumulator only when shock rod is in full up position.

Accumulator Removal

1. Place manual tilt system in soft jawed vise.
2. Position shock rod to full up position.
3. Open cam shaft valve (Down Position).
4. Loosen surge valve enough to drip, wait until dripping stops.
5. When fluid stops dripping, loosen and remove accumulator.

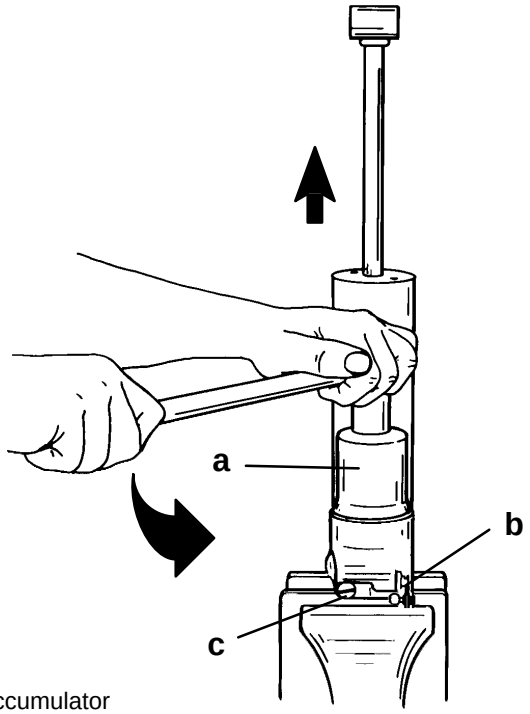

51143

a - Accumulator
b - Cam Lever
c - Velocity Plug

6. If plunger can be compressed into accumulator by hand, accumulator is defective. Replace accumulator.

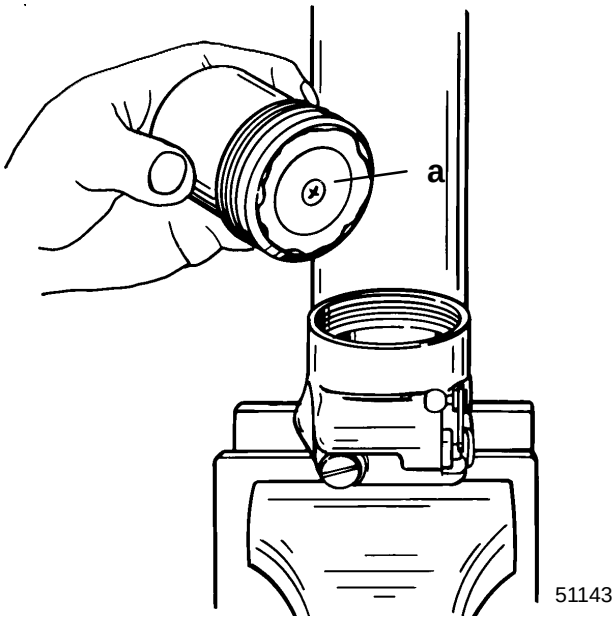

a - Plunger

7. Once accumulator is removed, remove O-ring, conical spring, steel ball and plunger.

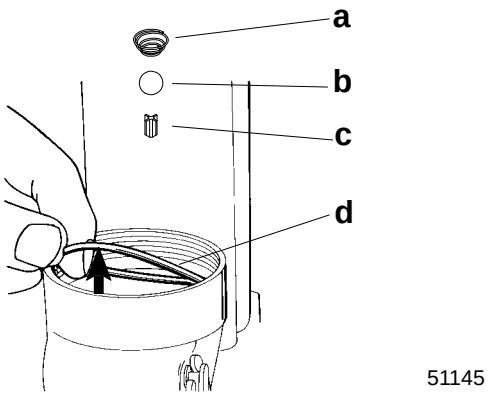

a - Conical Spring
b - Steel Ball
c - Plunger
d - O-ring

Shock Rod Removal

1. Unscrew cylinder end cap assembly using spanner wrench [1/4 in. x 5/16 in. long pegs].

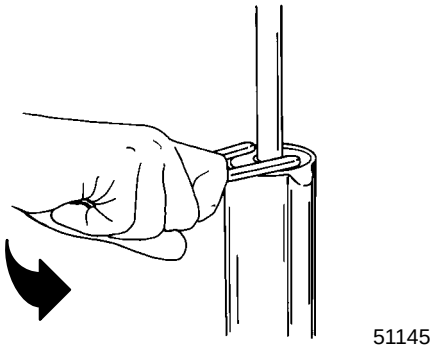

2. Remove shock rod assembly from cylinder.

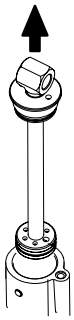

Shock Rod Disassembly

NOTE: *The only serviceable items on the shock rod assembly are the O-rings and wiper ring. If shock rod requires any other repair, replace shock rod assembly.*

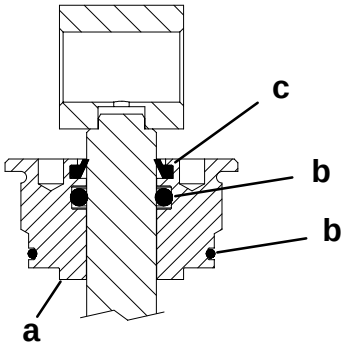

a - End Cap
b - O-rings (2)
c - Wiper Ring

1. Place shock rod assembly on clean work surface.
2. Remove three (3) screws and remove plate from shock rod piston.

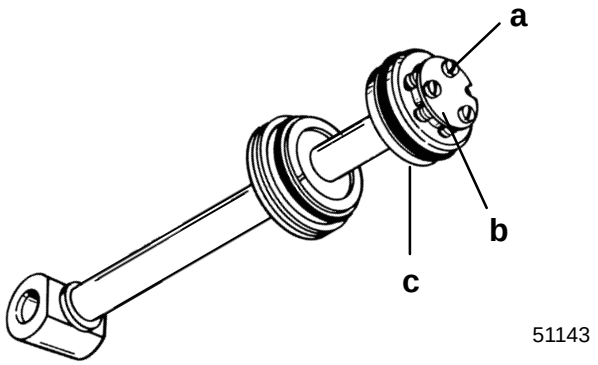

a - Screw (3)
b - Plate
c - Shock Rod Piston

3. Remove check ball components from shock rod piston.
4. Remove O-ring.

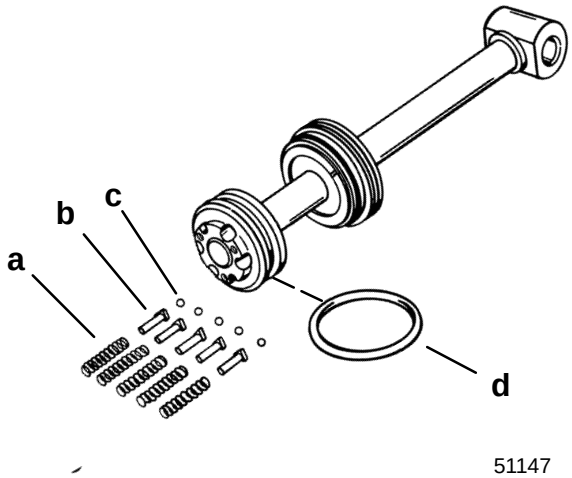

a - Springs (5)
b - Seats (5)
c - Balls (5)
d - O-ring

⚠ CAUTION

When removing shock piston, spanner wrench must have 1/4 in. x 5/16 in. long pegs to avoid damage to shock piston.

5. Place shock rod in soft jawed vise and apply heat to loosen piston using torch lamp (P/N 91-63209).
6. Loosen shock rod piston using spanner wrench [1/4 in. x 5/16 in. (6.4mm x 8mm) long pegs].
7. Allow shock rod piston to cool. Remove from shock rod.

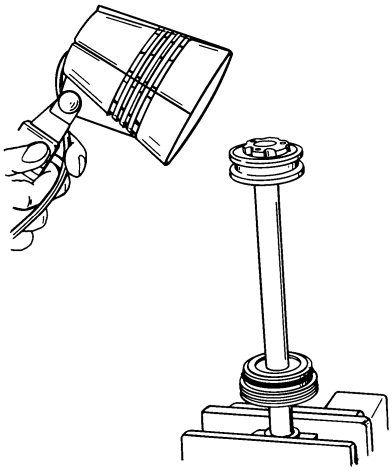

51146

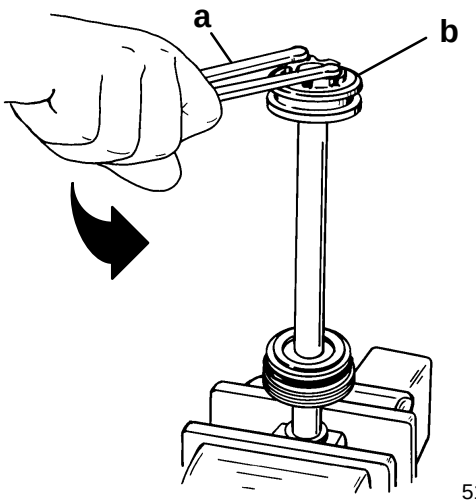

51146

a - Spanner Wrench
b - Shock Rod Piston

8. Inspect check valve for debris; clean debris from check valve if found. If debris cannot be cleaned from check valve, replace shock piston as an assembly.
9. Clean shock and components with compressed air.
10. Remove inner O-ring.

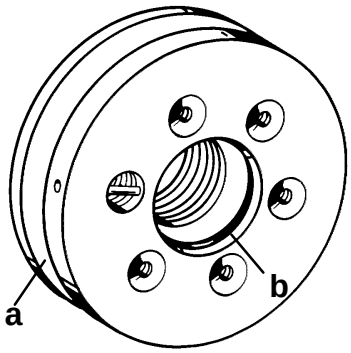

51199

a - Shock Piston
b - O-ring

11. Remove cylinder end cap assembly from shock rod.
12. Inspect shock. If wiper (located in cap) has failed to keep rod clean, replace wiper.
13. Place end cap on clean work surface.
14. Remove rod wiper, inner O-ring, and outer O-ring.

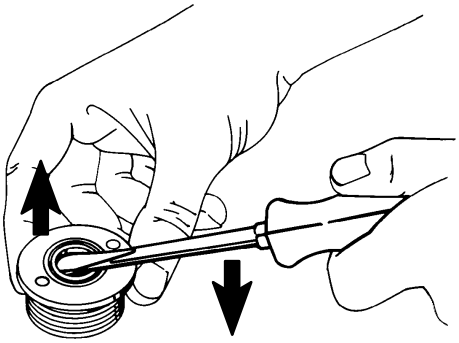

51147

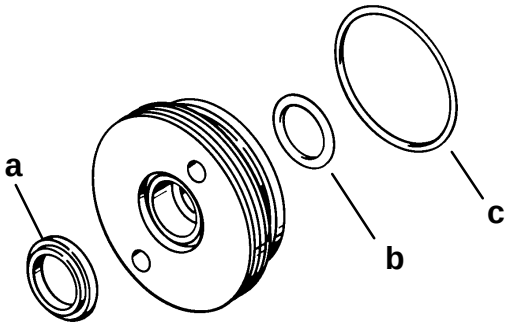

51145

a - Rod Wiper
b - Inner O-ring
c - Outer O-ring

Valve Block Removal

1. Remove two screws from the shock rod cylinder to separate the valve block.

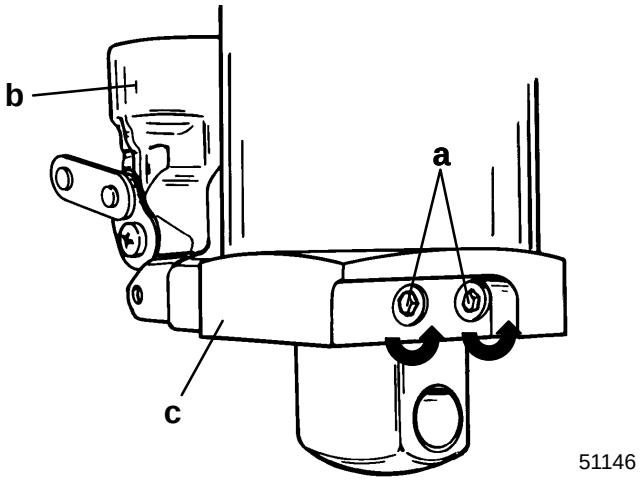

a - Screws (2)
b - Valve Block
c - Shock Rod Cylinder

2. Remove O-rings and dowel pins.

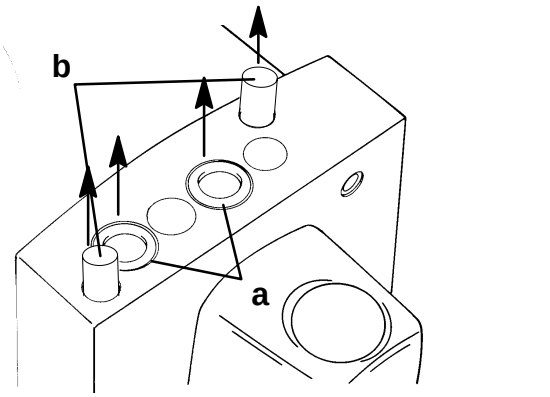

a - O-ring (2)
b - Dowel Pin (2)

Memory Piston Removal

1. Remove memory piston from cylinder using one of two methods:

   a. Using lock ring pliers (Craftsman P/N 4735) or (Snap-on P/N SRP4).

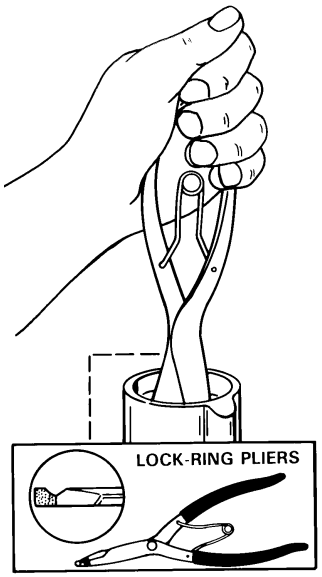

   b. Blowing compressed air into center O-ring hole.

⚠ WARNING

Memory piston cup may be expelled at a high velocity when air pressure is applied. Failure to place cylinder as shown below could result in personal injury.

NOTE: *Point cylinder opening down and away. Use a shop rag or towel to avoid damage to the memory piston. Fluid will blow out also.*

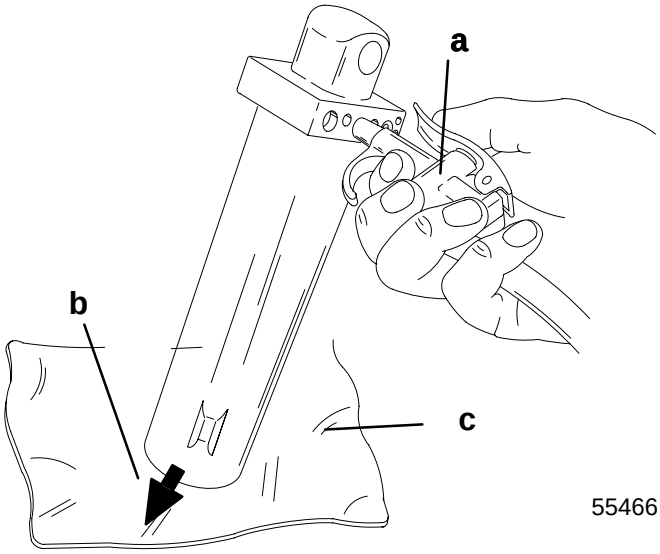

a - Adaptor/Air Hose
b - Memory Piston Exit
c - Shop Rag

2. Remove O-ring from memory piston.

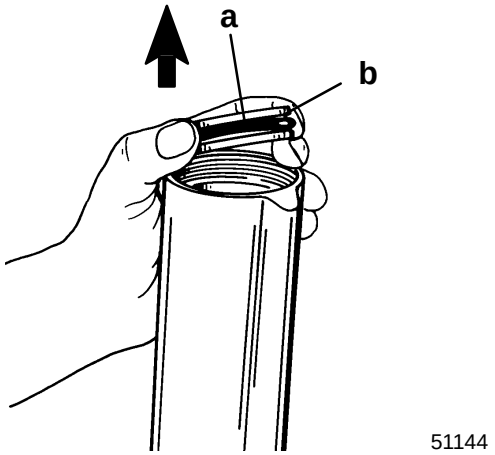

a - O-Ring
b - Memory Piston

Valve Block Disassembly

1. Remove check retainer plug and components.
2. Remove hydraulic oil transfer valve plugs and components.

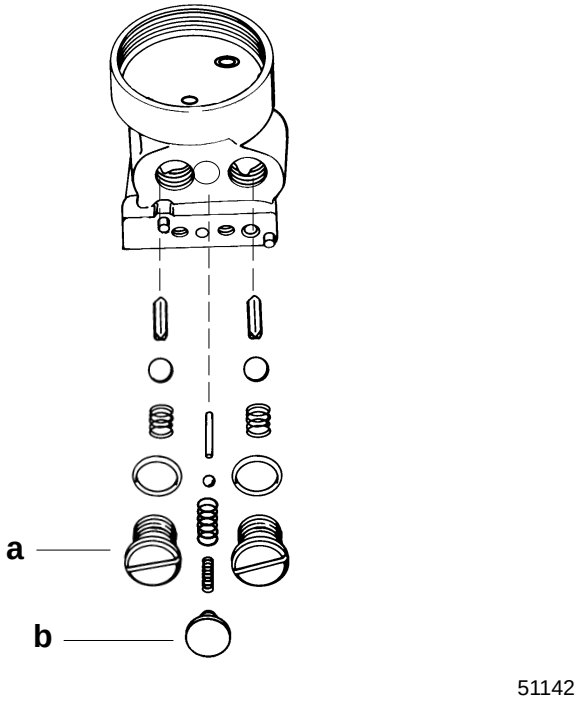

a - Transfer Valve Plug Assembly (2)
b - Check Retainer Plug or Screw Assembly

3. Remove surge valve assembly.

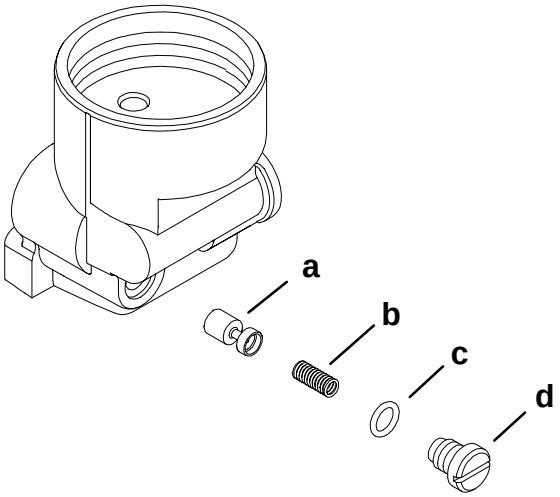

a - Spool
b - Spring
c - O-ring
d - Screw Plug

4. Remove screw and remove cam assembly.

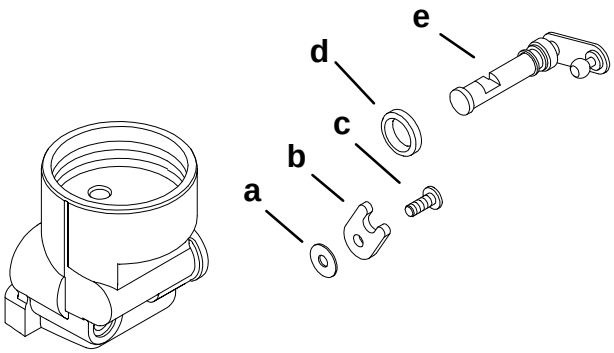

a - Spacer Retainer Clip
b - Retainer Clip
c - Screw
d - Shaft Seal
e - Cam

REASSEMBLY - O-RING AND SEAL PLACEMENT

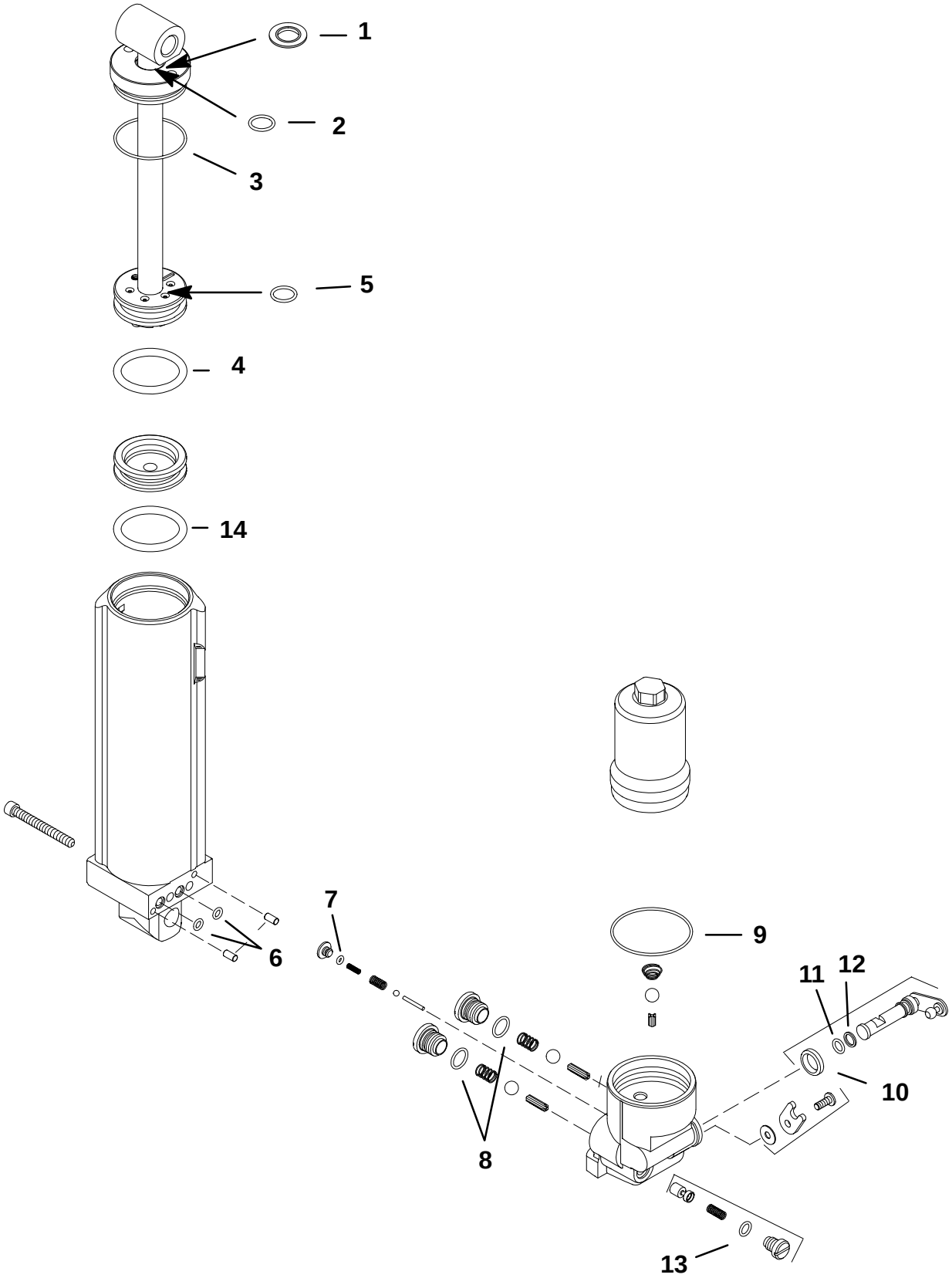

NOTE: *Lubricate all O-rings using Quicksilver Power Trim and Steering Fluid. If not available, use automotive (ATF) automatic transmission fluid.*

NOTE: *It is recommended that all O-rings be replaced when servicing tilt system.*

Actual O-ring Sizes

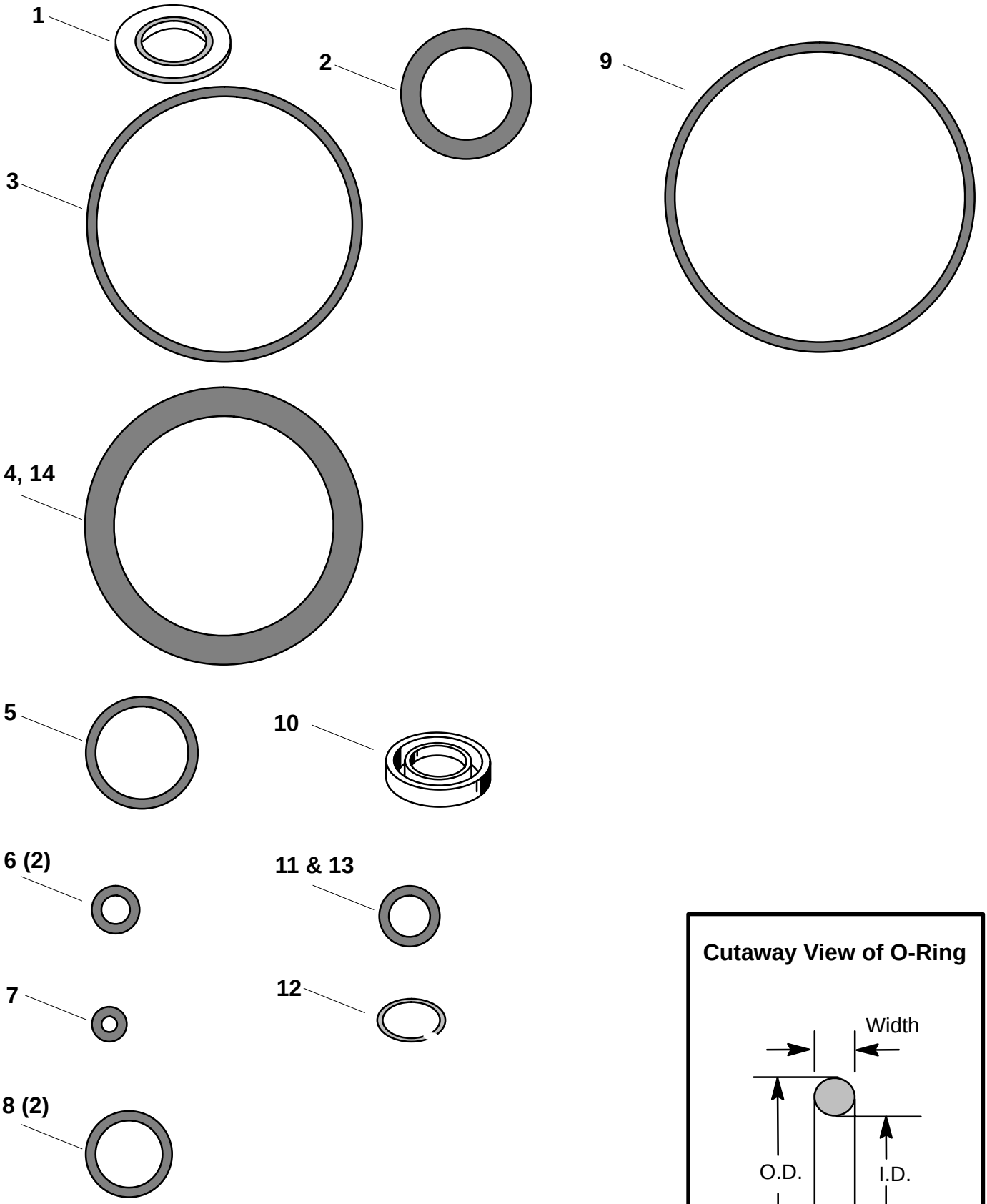

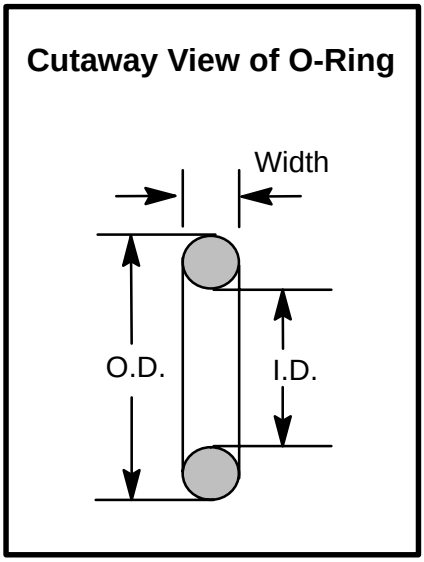

O-RINGS SHOWN ARE ACTUAL SIZE

O-ring Description and Sizes

O-Ring	Description	O-Ring I.D.	O-Ring O.D.	O-Ring Width
1	Wiper Ring			
2	Cyl. Cap, Inner	0.671 in. (17.04 mm)	0.949 in. (24.10 mm)	0.139 in. (3.53 mm)
3	Cyl. Cap	1.864 in. (47.34 mm)	2.004 in. (50.90 mm)	0.07 in. (1.78 mm)
4	Shock Piston	1.6 in. (40.64 mm)	2.02 in. (53.086 mm)	0.21 in. (5.334 mm)
5	Piston Bolt	0.676 in. (17.17 mm)	.816 in. (20.726 mm)	0.07 in. (1.78 mm)
6 (2)	Manifold Split Line	0.208 in. (5.283 mm)	0.348 in. (8.839 mm)	0.07 in. (1.78 mm)
7	Slow Valve	0.114 in. (2.90 mm)	0.254 in. (6.451 mm)	0.07 in. (1.78 mm)
8 (2)	Plug	0.489 in. (12.42 mm)	0.629 in. (15.97 mm)	0.07 in. (1.78 mm)
9	Accumulator	2.114 in. (53.69 mm)	2.254 in. (57.25 mm)	0.07 in. (1.78 mm)
10	Lip Seal			
11	Cam Shaft	0.301 in. (7.645 mm)	0.441 in. (11.20 mm)	0.07 in. (1.78 mm)
12	Back Up Ring			
13	Surge Valve	0.301 in. (7.645 mm)	0.441 in. (11.20 mm)	0.07 in. (1.78 mm)
14	Memory Piston	1.6 in. (40.64 mm)	2.02 in. (53.086 mm)	0.21 in. (5.334 mm)

Manual Tilt System Cleaning and Inspection

1. It is recommended that all O-rings exposed during disassembly be replaced.
2. Clean components, filter, and check valve seats using engine cleaner and compressed air. Do not use cloth rags.
3. Inspect all machined surfaces for burrs or scoring to assure O-ring longevity.
4. Inspect shock rod. If wiper (located in cap) has failed to keep rod clean, replace wiper.

Manual Tilt System Reassembly

IMPORTANT: Components must be dirt and lint free. Slightest amount of debris in tilt system could cause system to malfunction.

Apply Quicksilver Power Trim and Steering Fluid to all O-rings during reassembly. If not available, use automotive (ATF) automatic transmission fluid.

CAM SHAFT REASSEMBLY

IMPORTANT: Cam shaft O-ring must be lubricated using 2-4-C with Teflon (92-825407A12).

1. Install lubricated O-ring and back up seal to cam.
2. Install shaft seal in valve block with lips facing out.
3. Install cam shaft assembly in valve block.
4. Secure cam shaft in place using insulator, retainer plate, and screw. Tighten screw securely.

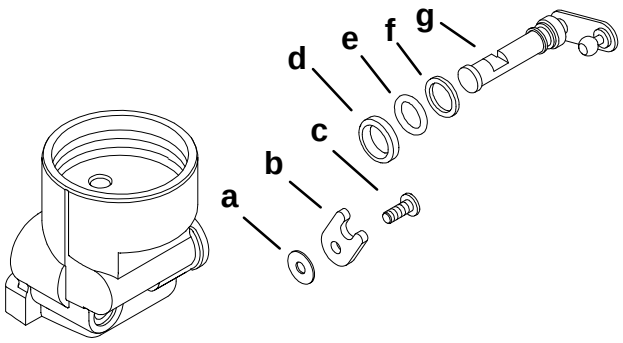

a - Spacer Retainer Clip
b - Retainer Clip
c - Screw
d - Shaft Seal
e - O-ring
f - Back up Seal
g - Cam

VALVE BODY CHECK REASSEMBLY

1. Install lubricated O-ring, plunger, steel ball and conical spring to valve block.

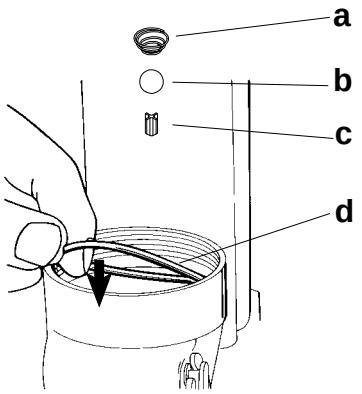

51145

a - Conical Spring
b - Steel Ball
c - Plunger
d - O-ring

VELOCITY VALVE REASSEMBLY

1. Install spool, spring, lubricated O-ring and screw plug (surge valve assembly) into valve block.
2. Torque screw plug to 75 lb. in. (8.5 N·m).

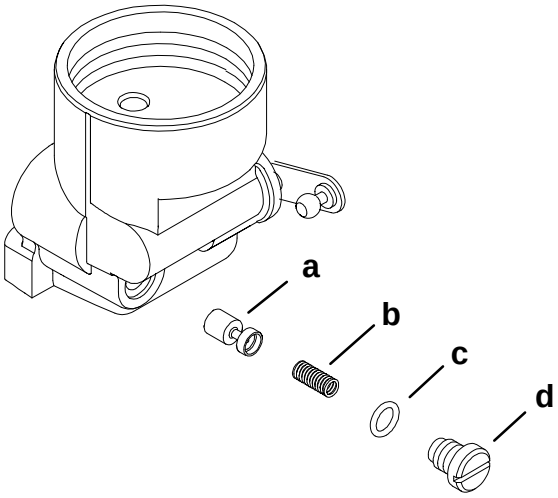

a - Spool
b - Spring
c - O-ring
d - Screw Plug - Torque to 75 lb. in. (8.5 N·m)

CHECK RETAINER REASSEMBLY

1. Install plunger, spring (large), ball, spring (small), and plug into valve block.

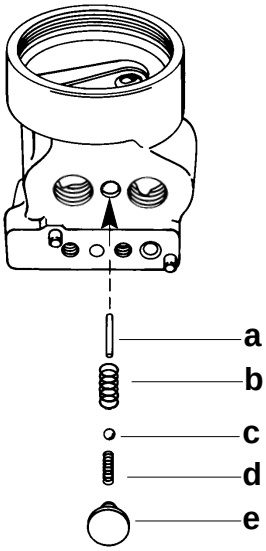

51142

a - Plunger
b - Spring (Large)
c - Ball
d - Spring (Small)
e - Plug

VALVE PLUG REASSEMBLY

1. Install plunger, steel ball, spring, lubricated O-ring and screw plug. Torque screw plugs to 75 lb. in. (8.5 N·m).

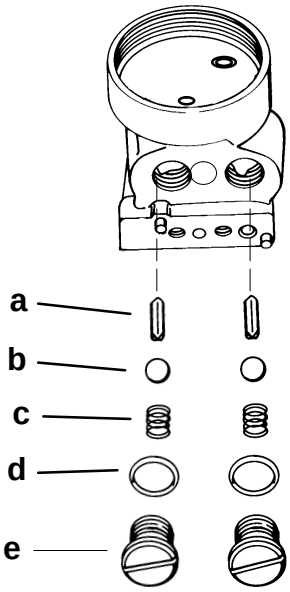

51142

a - Plungers (2)
b - Steel Balls (2)
c - Springs (2)
d - O-rings (2)
e - Screw Plugs (2) Torque to 75 lb. in. (8.5 N·m)

Valve Block Installation

1. Install lubricated O-rings and dowel pins.

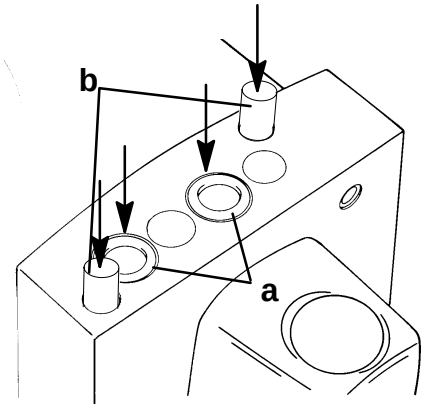

51148

a - O-rings (2)
b - Dowel Pins (2)

2. Install valve block to shock rod cylinder. Insert screws to shock rod cylinder and torque to 100 lb. in. (11 N·m).

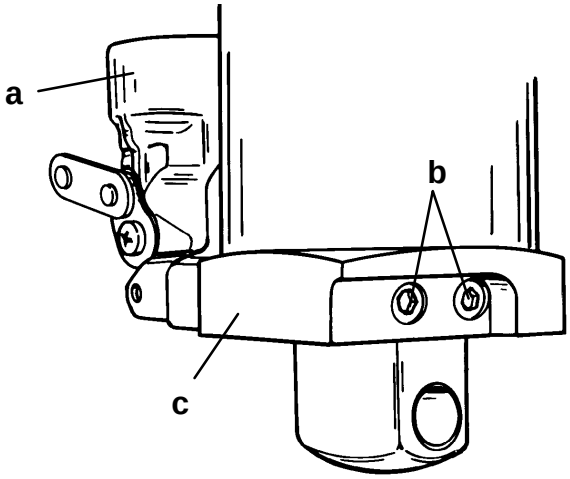

51146

a - Valve Block
b - Screws (2) Torque to 100 lb. in. (11 N·m)
c - Shock Rod Cylinder

Shock Rod Reassembly

1. Install lubricated O-rings to end cap.
2. Install rod wiper.

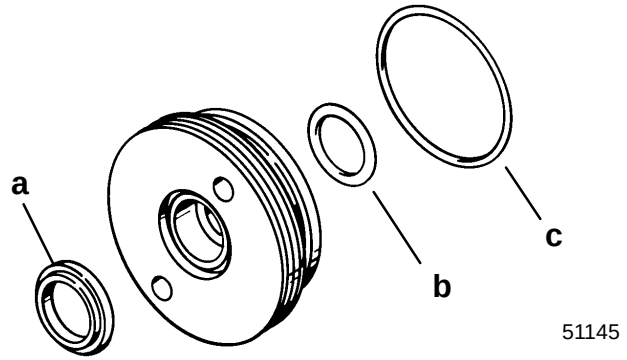

a - Rod Wiper
b - Inner O-ring
c - Outer O-ring

3. Install lubricated O-rings to shock piston.

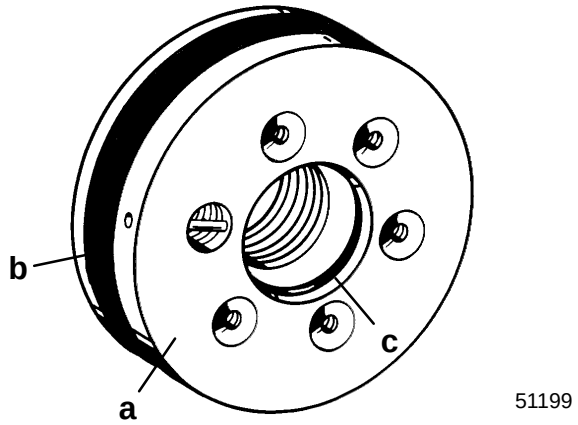

a - Shock Piston
b - O-ring
c - O-ring

4. Clamp shock rod in soft jawed vise.
5. Position cylinder end cap onto rod as shown.

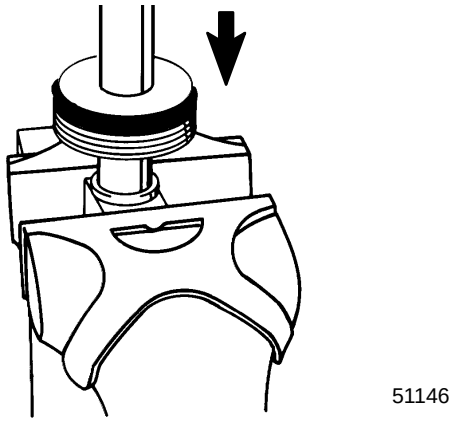

⚠ CAUTION

When installing shock rod piston, spanner wrench must have1/4 in. x 5/16 in. (6.4mm x8mm) long pegs to avoid damage to shock rod piston.

6. Apply Loctite Grade “A” (271) to threads on shock rod.
7. Install shock rod piston.
8. Tighten shock rod piston securely using spanner wrench [1/4 in. x 5/16 in. (6.4mm x 8mm) long pegs]. If a torquing type spanner tool is used to tighten shock piston, then torque to 90 lb. ft. (122 N·m).

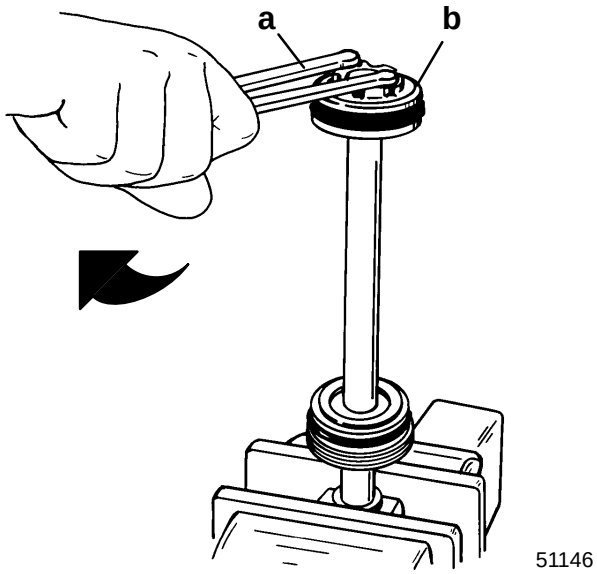

a - Spanner Wrench
b - Shock Rod Piston - Torque to 90 lb. ft. (122 N·m)

9. Install ball, seat, and spring (five sets) to shock rod piston.
10. Secure components with plate. Torque screws to 35 lb.in. (3.9 N·m).
11. Remove shock rod assembly from vise.

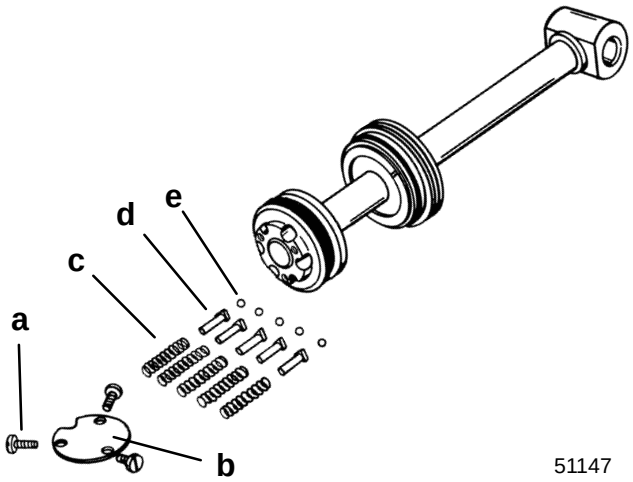

a - Screw (3) Torque to 35 lb. in. (3.9 N·m)
b - Plate
c - Spring (5)
d - Seat (5)
e - Ball (5)

Shock Rod Installation and Fluid Filling Procedure

NOTE: *There are two ways for the filling procedure. The first is the easiest and less time consuming.*

Filling Procedure Option One

1. Place trim cylinder in soft jawed vice.
2. With manifold cam lever closed (Up Position), fill cylinder and manifold to top with Quicksilver Power trim and steering fluid, or (ATF) automatic transmission fluid. Let bubbles disperse.
3. Install lubricated O-ring to memory piston.
4. Using lock ring pliers (Craftsman P/N 4735) or (Snap-on P/N SRP4) set memory piston in top of cylinder then open cam lever (Down Position) and push memory piston down just below cylinder treads. Close cam lever (Up Position).

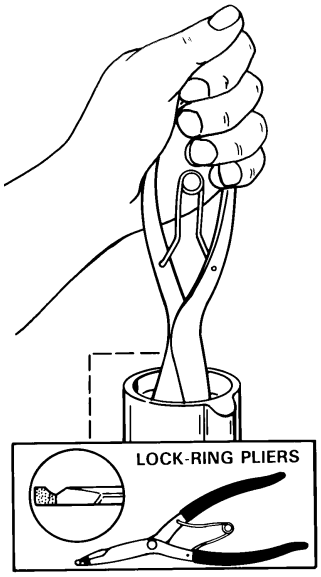

5. Fill top of cylinder again with fluid to top and install shock rod assembly on top memory piston. Open cam lever (Down Position) and push shock rod assembly down to 1/8″ below cylinder threads. Close cam lever (Up Position).

6. Fill top of shock rod assembly with fluid to top of cylinder. Open cam lever (Down Position) and screw cylinder cap down.
7. Tighten end cap securely using spanner wrench [1/4 in. x 5/16 in. (6.4mm x 8mm) long pegs]. If a torquing type spanner tool is used to tighten end cap, then torque the end cap to 45 lb. ft. (61.0 N·m). Close cam lever (up Position).

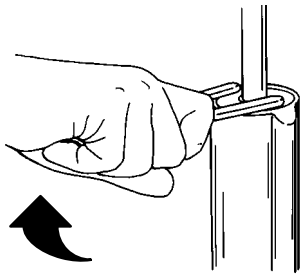

51145

8. Open and close cam lever watching for bubbles coming from accumulator check ball hole. When bubbles stop, fill accumulator opening to top with fluid. Grease threads on accumulator and opening with 2-4-C with Teflon. Start accumulator in threads and open cam lever (Down Position). Torque accumulator to 35 lb. ft. (47 N·m).

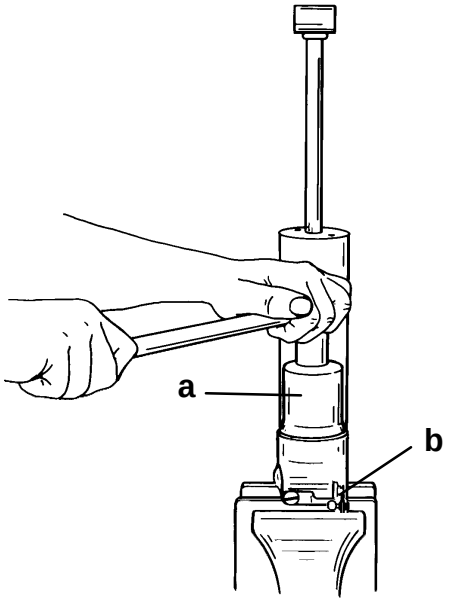

51143

a - Accumulator
b - Cam Lever (Down Position)

NOTE: *If filling procedure is done correctly, it should be hard to turn cylinder rod assembly by hand.*

Filling Procedure Option Two Instructions for Making Retaining Tool

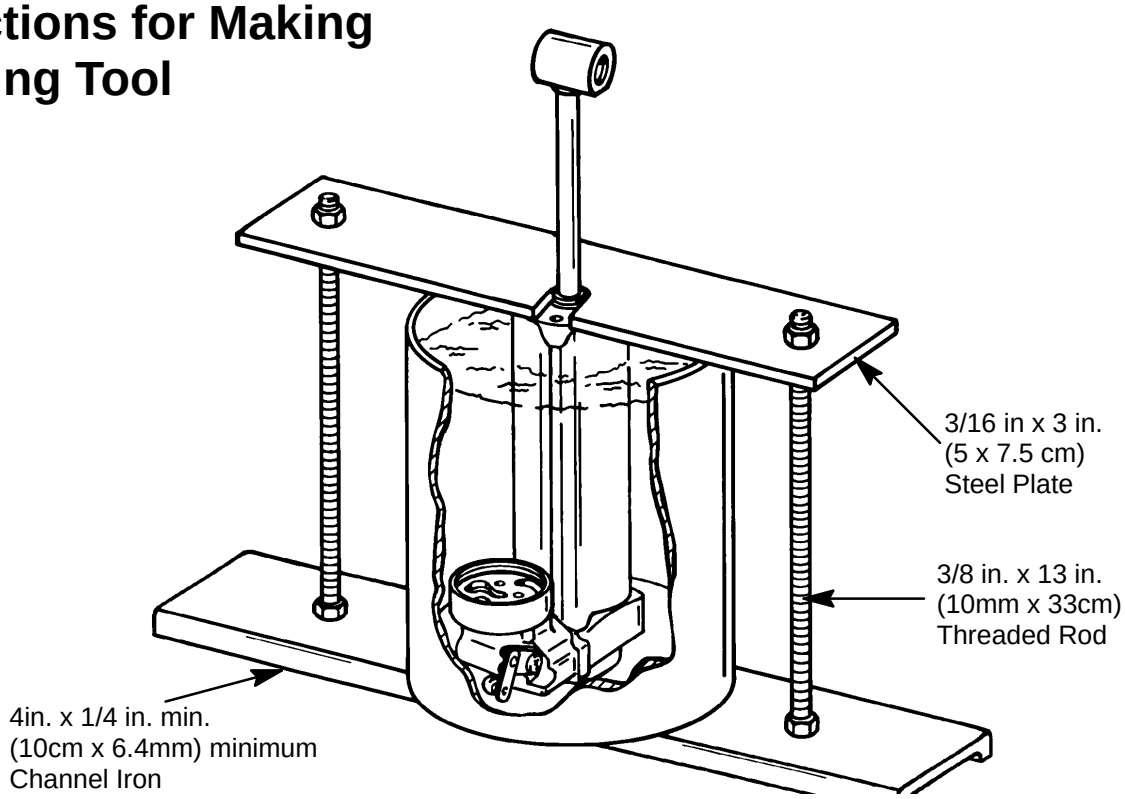

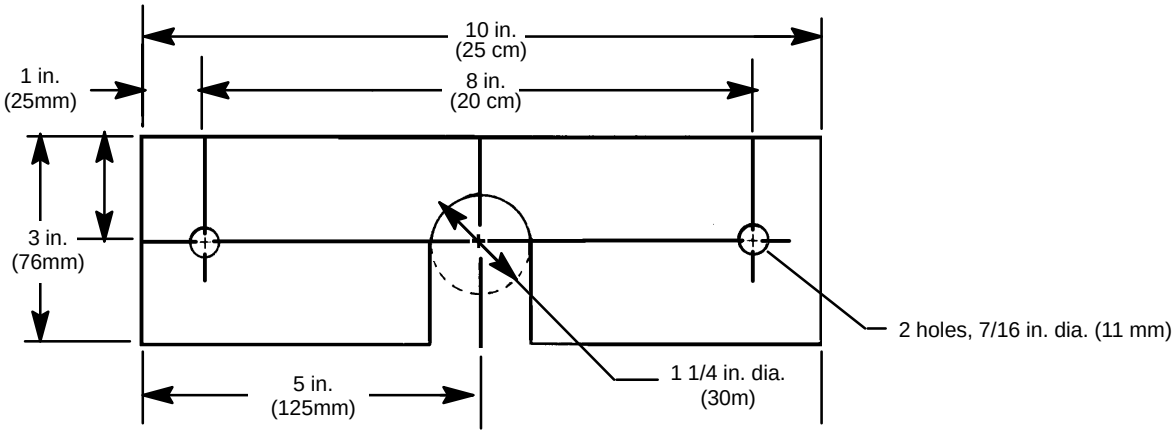

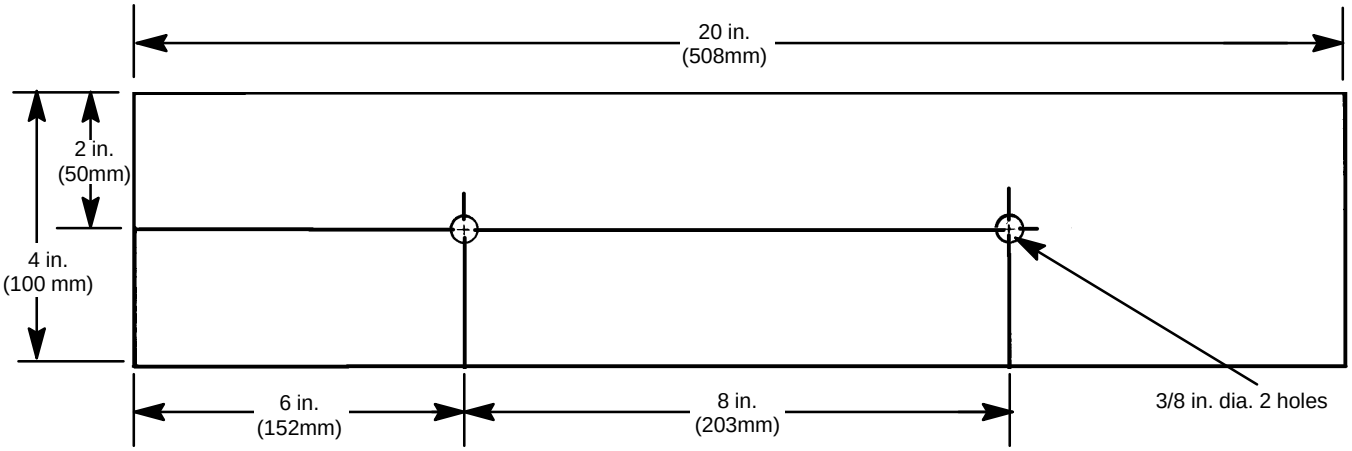

Bleeding Manual Tilt System

IMPORTANT: While bleeding tilt system, time must be allowed between each stroke to allow air bubbles to dissipate.

1. With shock rod in the full up position and manifold cam lever open (facing down), secure tilt system to retaining tool and container. (A No. 10 can or 3 lb. coffee can could be used).
2. Fill container to near full level using Quicksilver Power Trim and Steering Fluid. If not available, use automotive (ATF) automatic transmission fluid.

IMPORTANT: Fluid level must remain above accumulator opening during bleeding process.

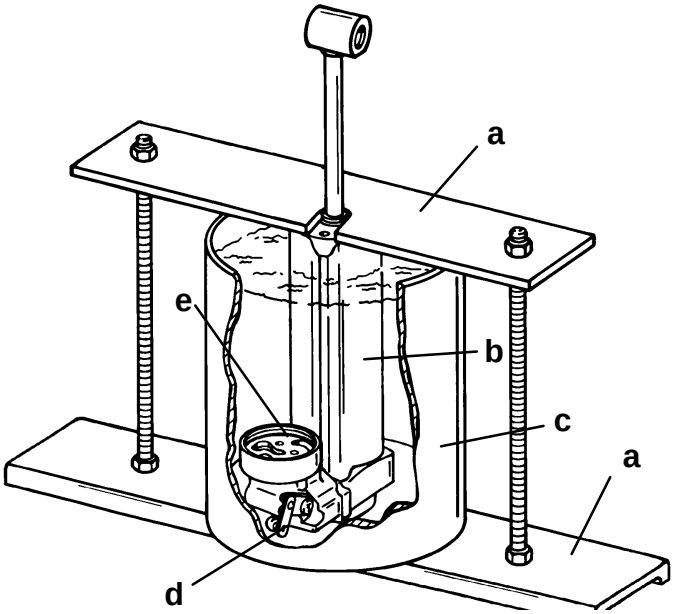

50447

a - Retaining Tool
b - Tilt System
c - Container
d - Cam Lever
e - Accumulator Opening

3. Bleed unit by pushing rod down slowly (18-20 seconds per stroke) until stopped at base. Wait until all air bubbles exit accumulator base.

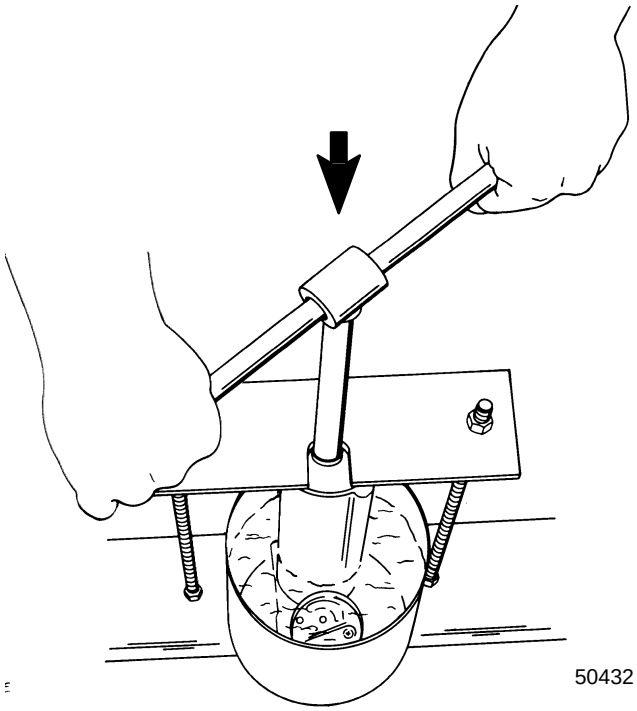

50432

4. During up stroke, pull up on rod slowly 3 in. (76mm) from base.
5. Wait until all air bubbles exit accumulator base.

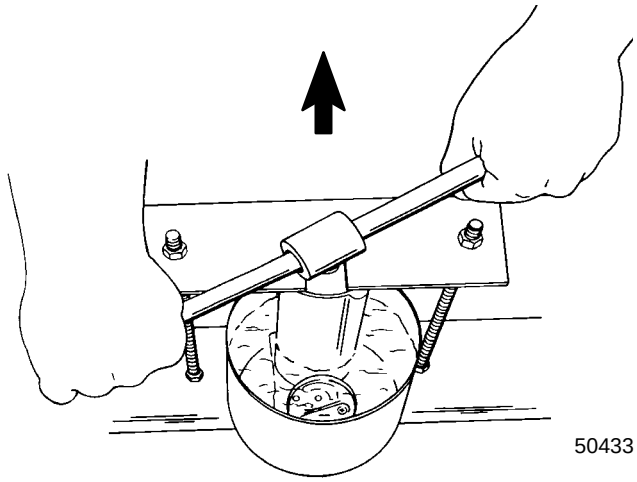

50433

6. Slowly cycle unit 5-8 times (round trip per cycle) using short strokes 3 in. (76mm) from base allowing bubbles to disappear during each stroke.

7. Allow unit to stand five minutes then proceed to cycle unit 2-3 more times using short strokes. No air bubbles should appear from accumulator port at this time.
8. With oil level well above accumulator port, slowly pull rod to full up position.
9. Install accumulator making sure air bubbles do not enter system.

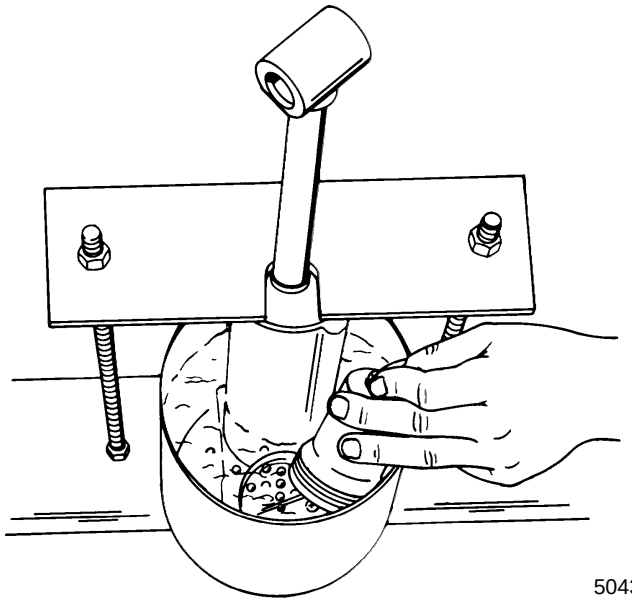

10. Tighten accumulator snugly at this time.

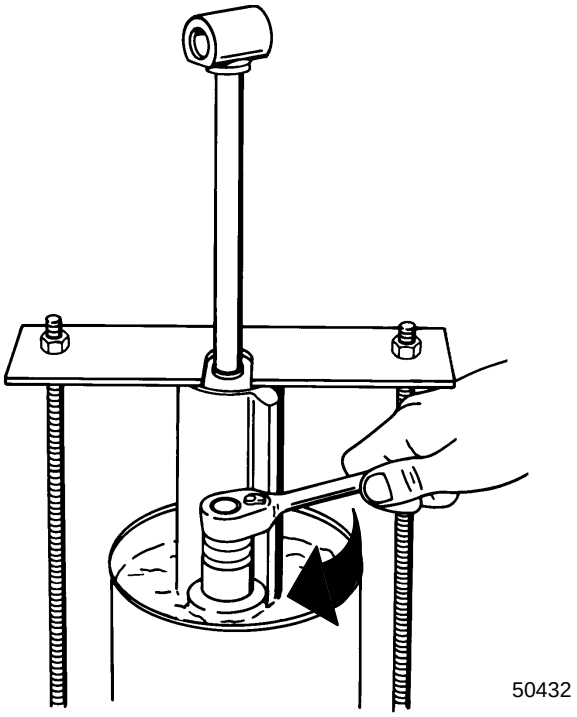

11. With cam lever remaining open (facing down), remove tilt assembly from oil and secure in soft jawed vise. Torque accumulator to 35 lb. ft. (47 N·m).

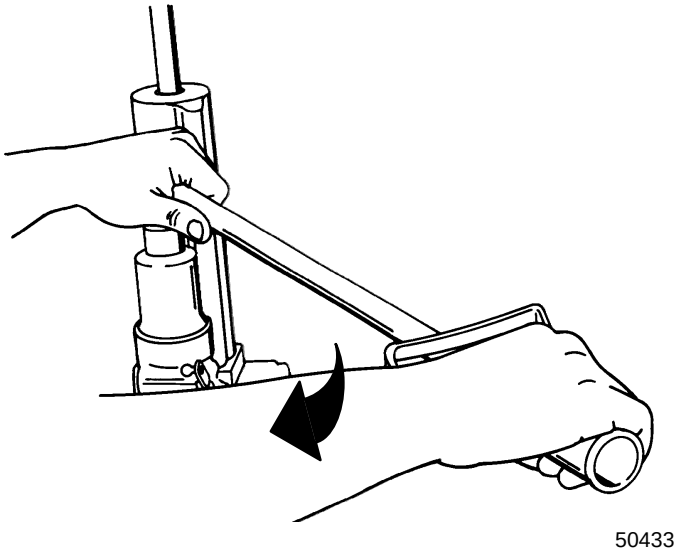

Manual Tilt System Installation

1. Apply 2-4-C Marine Lubricant to lower pivot pin hole and pivot pin surface.
2. Start lower pivot pin into pivot pin hole and position lower dowel pin (retained) in its hole.

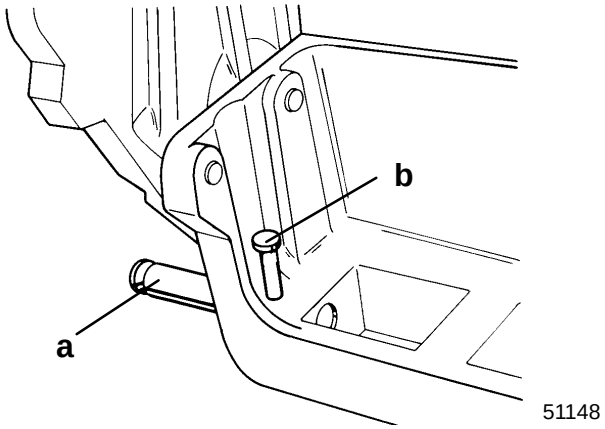

a - Lower Pivot Pin
b - Lower Dowel Pin

3. Reinstall manual tilt system, bottom first. Reconnect release valve link rod.

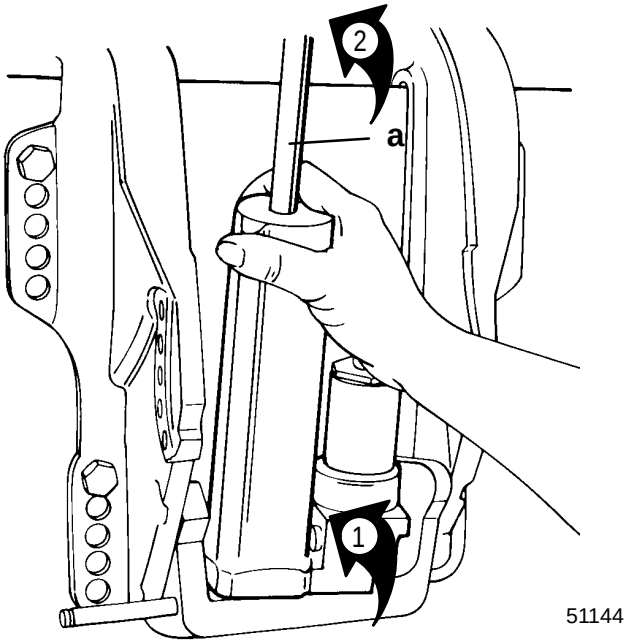

a - Manual Tilt System

4. Using a suitable punch, drive lower pivot pin into clamp bracket and trim cylinder assembly until pivot pin is flush with outside surface.

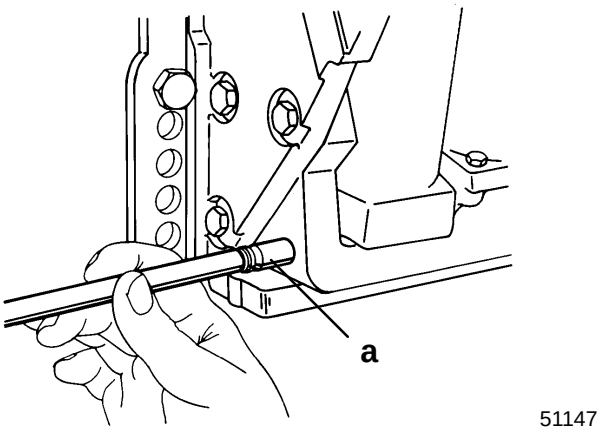

a - Lower Pivot Pin

5. Using a punch, drive lower dowel pin in until seated.

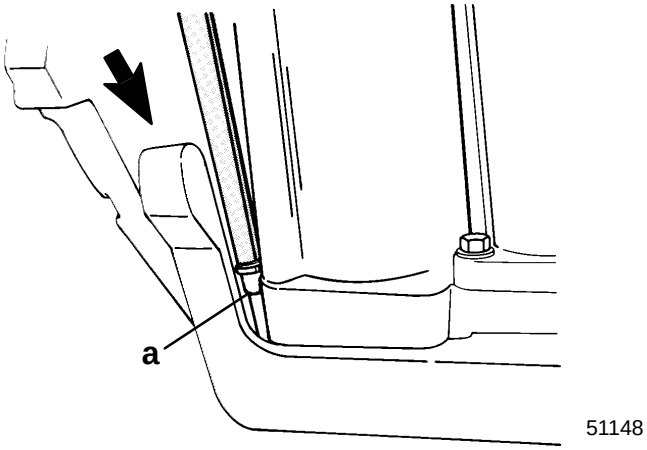

a - Lower Dowel Pin

6. Apply 2-4-C Marine Lubricant (92-90018A12) to surface of upper pivot pin, pivot pin hole and shock rod hole.

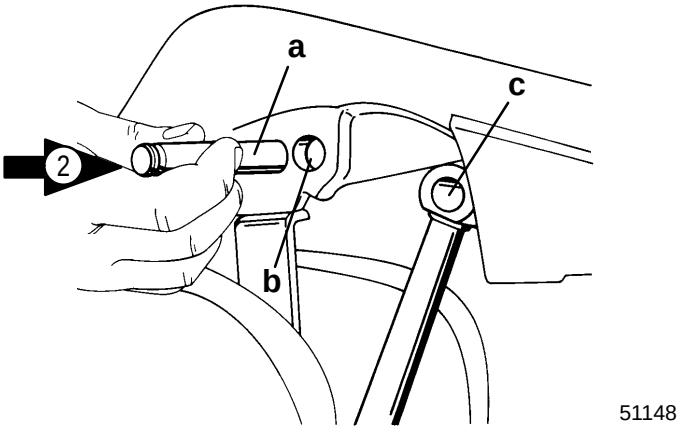

a - Pivot Pin
b - Pivot Pin Bore
c - Shock Rod Bore

7. Using a mallet, drive upper pivot pin into swivel bracket and through shock rod until pivot pin is flush with swivel bracket.

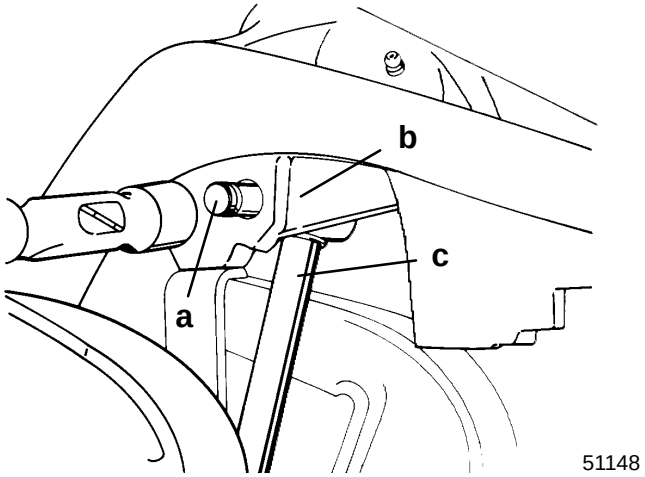

a - Pivot Pin
b - Swivel Bracket
c - Shock Rod

8. Drive upper dowel pin (a) into its hole until seated.

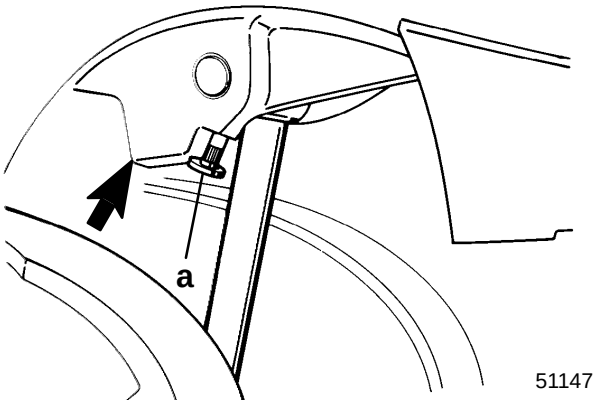

a - Dowel Pin

9. Check manual release cam adjustment. Cam must open and close freely. Adjust link rod as necessary.

Manual Release Valve Adjustment

1. With outboard in full up position, place tilt lock lever forward.
2. Lift cam lever (with link rod) to full up position.

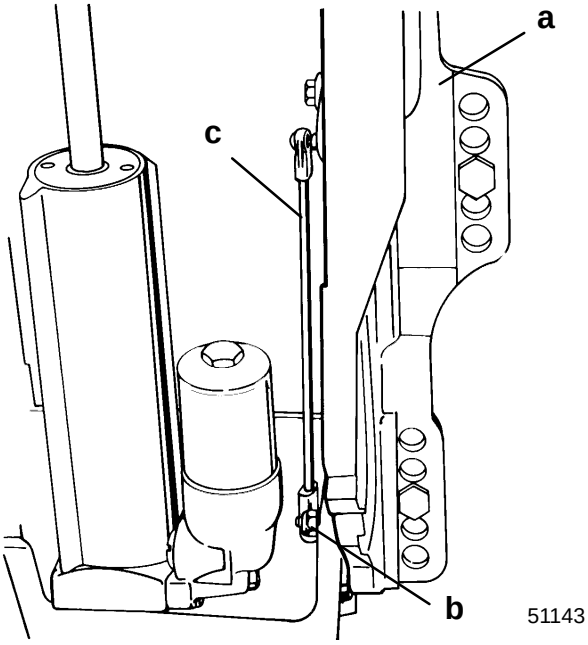

a - Tilt Lock Lever
b - Cam Lever
c - Link Rod

3. Link rod end must snap onto ball of tilt lock lever without moving tilt lock lever or cam lever.