If the outboard motor's serial number plate contains the CE mark in the lower left-hand corner, the following statement applies:

This outboard motor manufactured by Mercury Marine, Fond du Lac, Wisconsin, USA or Marine Power Europe Inc. Park Industriel, de Petit-Rechain, Belgium complies with the requirements of the following directives and standards, as amended:

Recreational Craft Directive:	94/25/EC; std. ISO 8665, ISO 11547
Machinery Directive:	98/37/EC,
EMC Directive:	89/336/EC; std. EN50081-1, SAE J551 (CISPR Pub. 12), EN 50082-1, IEC 61000 PT4-2, IEC 61000 PT4-3

Patrick C. Mackey

President, Mercury Marine, Fond du Lac, WI USA

European Regulations Contact:
Product Environmental Engineering Department, Mercury Marine, Fond du Lac, WI USA

EPA Emissions Regulations

Outboards manufactured by Mercury Marine in the United States are certified to the United States Environmental Protection Agency as conforming to the requirements of the regulations for the control of air pollution from new outboard motors. This certification is contingent on certain adjustments being set to factory standards. For this reason, the factory procedure for servicing the product must be strictly followed and, wherever practicable, returned to the original intent of the design. **Maintenance, replacement, or repair of the emission control devices and systems may be performed by any marine engine repair establishment or individual.**
Engines are labeled with an Emission Control Information decal as permanent evidence of EPA certification.

⚠ WARNING

The engine exhaust from this product contains chemicals known to the state of California to cause cancer, birth defects or other reproductive harm.

© 2003 Mercury Marine

Thank You

For your purchase of one of the finest outboards available. You have made a sound investment in boating pleasure. Your outboard has been manufactured by Mercury Marine, a world leader in marine technology and outboard manufacturing since 1939. These years of experience have been committed to the goal of producing the finest quality products. This led to Mercury Marine's reputation for strict quality control, excellence, durability, lasting performance and being the best at providing after-the-sale support.

Please read this manual carefully before operating your outboard. This manual has been prepared to assist you in the operation, safe use and care of your outboard.

All of us at Mercury Marine took pride in building your outboard and wish you many years of happy and safe boating.

Again, thank you for your confidence in Mercury Marine.

Warranty Message

The product you have purchased comes with a **limited warranty** from Mercury Marine, the terms of the warranty are set forth in the *Warranty Information* Section of this manual. The warranty statement contains a description of what is covered, what is not covered, the duration of coverage, how to best obtain warranty coverage, **important disclaimers and limitations of damages**, and other related information. Please review this important information.

The description and specifications contained herein were in effect at the time this manual was approved for printing. Mercury Marine, whose policy is one of continued improvement, reserves the right to discontinue models at any time, to change specifications, designs, methods, or procedures without notice and without incurring obligation.

Mercury Marine, Fond du Lac, Wisconsin U.S.A. Litho in U.S.A.

© 2003, Mercury Marine
The following are registered trademarks of Brunswick Corporation: AutoBlend, Force, Jet-Prop, Mariner, Merc, MerCathode, MerCruiser, Mercury, Mercury Marine, Quicksilver, RideGuide and Thruster.

CONTENTS

1	Warranty Information	P. 2
2	General Information	P. 11
3	Features	P. 23
4	Specifications	P. 24
5	Installation	P. 25
6	Fuel & Oil	P. 26
7	Operation	P. 27
8	Maintenance	P. 43
9	Adjustments	P. 55
10	Submerged Outboard	P. 57
11	Owner Service Assistance	P. 59

WARRANTY INFORMATION

ou52

Warranty Registration

UNITED STATES AND CANADA

1. To be eligible for warranty coverage, the product must be registered with Mercury Marine. At the time of sale, the dealer should complete the warranty registration and immediately submit it to Mercury Marine via MercNet, E-mail, or mail. Upon receipt of this warranty registration, Mercury Marine will record the registration.

2. Upon processing the warranty registration, Mercury Marine will send registration verification by mail to the purchaser of the product. If this registration verification is not received within 30 days, please contact your selling dealer immediately. Warranty coverage is not effective until your product is registered with Mercury Marine.

NOTE: *Registration lists must be maintained by Mercury Marine and dealer on marine products sold in the United States, should A safety recall notification under the Federal Boat Safety Act be required.*

3. You may change your address at any time, including at time of warranty claim, by calling Mercury Marine or sending a letter or fax with your name, old address, new address, and engine serial number to Mercury Marine's warranty registration department. Your dealer can also process this change of information.

Mercury Marine
Attn: Warranty Registration Department
W6250 Pioneer Road
P.O. Box 1939
Fond du Lac, WI 54935-1939
Phone: 920-929-5054
Fax: 920-929-5893

WARRANTY INFORMATION

ou2

Warranty Registration

OUTSIDE THE UNITED STATES AND CANADA

1. It is important that your selling dealer fills out the Warranty Registration Card completely and mails it to the distributor or Marine Power Service Center responsible for administering the warranty registration/claim program for your area.

2. The Warranty Registration Card identifies your name and address, product model and serial number(s), date of sale, type of use and the selling distributor's/dealer's code number, name and address. The distributor/dealer also certifies that you are the original purchaser and user of the product.

3. A copy of the Warranty Registration Card, designated as the "Purchaser's Copy", MUST be given to you immediately after the card has been completely filled out by the selling distributor/dealer. This card represents your factory registration identification, and should be retained by you for future use when required. Should you ever require warranty service on this product, your dealer may ask you for the Warranty Registration Card to verify date of purchase and to use the information on the card to prepare the warranty claim form(s).

4. In some countries, the Marine Power Service Center will issue you a permanent (plastic) Warranty Registration Card within 30 days after receiving the "Factory Copy" of the Warranty Registration Card from your distributor/dealer. If you receive a plastic Warranty Registration Card, you may discard the "Purchaser's Copy" that you received from the distributor/dealer when you purchased the product. Ask your distributor/dealer if this plastic card program applies to you.

5. For further information concerning the Warranty Registration Card and its relationship to Warranty Claim processing, refer to the "International Warranty".

IMPORTANT: Registration lists must be maintained by the factory and dealer in some countries by law. It is our desire to have ALL products registered at the factory should it ever be necessary to contact you. Make sure your dealer/distributor fills out the warranty registration card immediately and sends the factory copy to the Marine Power International Service Center for your area.

WARRANTY INFORMATION

ou53

Outboard Limited Warranty

UNITED STATES AND CANADA

Outside the United States and Canada – Check with your local distributor.

WHAT IS COVERED: Mercury Marine warrants its new Outboard and Jet products to be free of defects in material and workmanship during the period described below.

DURATION OF COVERAGE: This Limited Warranty provides coverage for one (1) year from either the date the product is first sold, or the date on which the product is first put into service, whichever occurs first. The repair or replacement of parts, or the performance of service under this warranty, does not extend the life of this warranty beyond its original expiration date. Unexpired warranty coverage can be transferred from one recreational use customer to a subsequent recreational use customer upon proper re-registration of the product. Unexpired warranty coverage cannot be transferred either to or from a commercial use customer. Commercial use is defined as any work or employment related use of the product, or any use of the product which generates income, for any part of the warranty period, even if the product is only occasionally used for such purposes.

CONDITIONS THAT MUST BE MET IN ORDER TO OBTAIN WARRANTY COVERAGE: Warranty coverage is available only to retail customers that purchase from a Dealer authorized by Mercury Marine to distribute the product in the country in which the sale occurred, and then only after the Mercury Marine specified pre-delivery inspection process is completed and documented. Warranty coverage becomes available upon proper registration of the product by the authorized dealer. Routine maintenance outlined in the Operation and Maintenance Manual must be timely performed in order to maintain warranty coverage. Mercury Marine reserves the right to make warranty coverage contingent upon proof of proper maintenance.

WHAT MERCURY WILL DO: Mercury's sole and exclusive obligation under this warranty is limited to, at our option, repairing a defective part, replacing such part or parts with new or Mercury Marine certified re-manufactured parts, or refunding the purchase price of the Mercury product. Mercury reserves the right to improve or modify products from time to time without assuming an obligation to modify products previously manufactured.

HOW TO OBTAIN WARRANTY COVERAGE: The customer must provide Mercury with a reasonable opportunity to repair, and reasonable access to the product for warranty service. Warranty claims shall be made by delivering the product for inspection to a Mercury dealer authorized to service the product. If purchaser cannot deliver the product to such a dealer, written notice must be given to Mercury. We will then arrange for the inspection and any covered repair. Purchaser in that case shall pay for all related transportation charges and/or travel time. If the service provided is not covered by this warranty, purchaser shall pay for all related labor and material, and any other expenses associated with that service. Purchaser shall not, unless requested by Mercury, ship the product or parts of the product directly to Mercury. Proof of registered ownership must be presented to the dealer at the time warranty service is requested in order to obtain coverage.

WARRANTY INFORMATION

ou24

Outboard Limited Warranty

UNITED STATES AND CANADA

WHAT IS NOT COVERED: This limited warranty does not cover routine maintenance items, tune ups, adjustments, normal wear and tear, damage caused by abuse, abnormal use, use of a propeller or gear ratio that does not allow the engine to run in its recommended wide-open-throttle RPM range (see the Operation and Maintenance Manual), operation of the product in a manner inconsistent with the recommended operation/duty cycle section of the Operation and Maintenance Manual, neglect, accident, submersion, improper installation (proper installation specifications and techniques are set forth in the installation instructions for the product), improper service, use of an accessory or part not manufactured or sold by us, jet pump impellers and liners, operation with fuels, oils or lubricants which are not suitable for use with the product (see the Operation and Maintenance Manual), alteration or removal of parts, water entering the engine through the fuel intake, air intake or exhaust system, or damage to the product from insufficient cooling water caused by blockage of the cooling system by a foreign body, running the engine out of water, mounting the engine too high on the transom, or running the boat with the engine trimmed out too far. Use of the product for racing or other competitive activity, or operating with a racing type lower unit, at any point, even by a prior owner of the product, voids the warranty.

Expenses related to haul-out, launch, towing, storage, telephone, rental, inconvenience, slip fees, insurance coverage, loan payments, loss of time, loss of income, or any other type of incidental or consequential damages are not covered by this warranty. Also, expenses associated with the removal and/or replacement of boat partitions or material caused by boat design for access to the product are not covered by this warranty.

No individual or entity, including Mercury Marine authorized dealers, has been given authority by Mercury Marine to make any affirmation, representation or warranty regarding the product, other than those contained in this limited warranty, and if made, shall not be enforceable against Mercury Marine.

For additional information regarding events and circumstances covered by this warranty, and those that are not, see the Warranty Coverage section of the Operation and Maintenance Manual, incorporated by reference into this warranty.

DISCLAIMERS AND LIMITATIONS:

THE IMPLIED WARRANTIES OF MERCHANTABILITY AND FITNESS FOR A PARTICULAR PURPOSE ARE EXPRESSLY DISCLAIMED. TO THE EXTENT THAT THEY CANNOT BE DISCLAIMED, THE IMPLIED WARRANTIES ARE LIMITED IN DURATION TO THE LIFE OF THE EXPRESS WARRANTY. INCIDENTAL AND CONSEQUENTIAL DAMAGES ARE EXCLUDED FROM COVERAGE UNDER THIS WARRANTY. SOME STATES/COUNTRIES DO NOT ALLOW FOR THE DISCLAIMERS, LIMITATIONS AND EXCLUSIONS IDENTIFIED ABOVE, AS A RESULT, THEY MAY NOT APPLY TO YOU. THIS WARRANTY GIVES YOU SPECIFIC LEGAL RIGHTS, AND YOU MAY ALSO HAVE OTHER LEGAL RIGHTS WHICH VARY FROM STATE TO STATE AND COUNTRY TO COUNTRY.

WARRANTY INFORMATION

ou54

3 Year Limited Warranty Against Corrosion

WHAT IS COVERED: Mercury Marine warrants that each new Mercury, Mariner, Mercury Racing, Sport Jet, M^2 Jet Drive, Tracker by Mercury Marine Outboard, MerCruiser Inboard or sterndrive engine (Product) will not be rendered inoperative as a direct result of corrosion for the period of time described below.

DURATION OF COVERAGE: This limited corrosion warranty provides coverage for three (3) years from either the date the product is first sold, or the date on which the product is first put into service, whichever occurs first. The repair or replacement of parts, or the performance of service under this warranty does not extend the life of this warranty beyond its original expiration date. Unexpired warranty coverage can be transferred to subsequent (noncommercial use) purchaser upon proper re-registration of the product.

CONDITIONS THAT MUST BE MET IN ORDER TO OBTAIN WARRANTY COVERAGE: Warranty coverage is available only to retail customers that purchase from a Dealer authorized by Mercury Marine to distribute the product in the country in which the sale occurred, and then only after the Mercury Marine specified pre-delivery inspection process is completed and documented. Warranty coverage becomes available upon proper registration of the product by the authorized dealer. Corrosion prevention devices specified in the Operation and Maintenance Manual must be in use on the boat, and routine maintenance outlined in the Operation and Maintenance Manual must be timely performed (including without limitation the replacement of sacrificial anodes, use of specified lubricants, and touch-up of nicks and scratches) in order to maintain warranty coverage. Mercury Marine reserves the right to make warranty coverage contingent upon proof of proper maintenance.

WHAT MERCURY WILL DO: Mercury's sole and exclusive obligation under this warranty is limited to, at our option, repairing a corroded part, replacing such part or parts with new or Mercury Marine certified re-manufactured parts, or refunding the purchase price of the Mercury product. Mercury reserves the right to improve or modify products from time to time without assuming an obligation to modify products previously manufactured.

HOW TO OBTAIN WARRANTY COVERAGE: The customer must provide Mercury with a reasonable opportunity to repair, and reasonable access to the product for warranty service. Warranty claims shall be made by delivering the product for inspection to a Mercury dealer authorized to service the product. If purchaser cannot deliver the product to such a dealer, written notice must be given to Mercury. We will then arrange for the inspection and any covered repair. Purchaser in that case shall pay for all related transportation charges and/or travel time. If the service provided is not covered by this warranty, purchaser shall pay for all related labor and material, and any other expenses associated with that service. Purchaser shall not, unless requested by Mercury, ship the product or parts of the product directly to Mercury. Proof of registered ownership must be presented to the dealer at the time warranty service is requested in order to obtain coverage.

WARRANTY INFORMATION

ou27

3 Year Limited Warranty Against Corrosion

WHAT IS NOT COVERED: This limited warranty does not cover electrical system corrosion; corrosion resulting from damage, corrosion which causes purely cosmetic damage, abuse or improper service; corrosion to accessories, instruments, steering systems; corrosion to factory installed jet drive unit; damage due to marine growth; product sold with less than a one year limited Product warranty; replacement parts (parts purchased by customer); products used in a commercial application. Commercial use is defined as any work or employment related use of the product, or any use of the product which generates income, for any part of the warranty period, even if the product is only occasionally used for such purposes.

Corrosion damage caused by stray electrical currents (on-shore power connections, nearby boats, submerged metal) is not covered by this corrosion warranty and should be protected against by the use of a corrosion protection system, such as the Mercury Precision Parts or Quicksilver MerCathode system and/or Galvanic Isolator. Corrosion damage caused by improper application of copper base anti-fouling paints is also not covered by this limited warranty. If anti-fouling protection is required, Tri-Butyl-Tin-Adipate (TBTA) base anti-fouling paints are recommended on Outboard and MerCruiser boating applications. In areas where TBTA base paints are prohibited by law, copper base paints can be used on the hull and transom. Do not apply paint to the outboard or MerCruiser product. In addition, care must be taken to avoid an electrical interconnection between the warranted product and the paint. For MerCruiser product, an unpainted gap of at least 1.5 inches (38mm) should be left around the transom assembly. Refer to the Operation and Maintenance Manual for additional details.

For additional information regarding events and circumstances covered by this warranty, and those that are not, see the Warranty Coverage section of the Operation and Maintenance Manual, incorporated by reference into this warranty.

DISCLAIMERS AND LIMITATIONS:
THE IMPLIED WARRANTIES OF MERCHANTABILITY AND FITNESS FOR A PARTICULAR PURPOSE ARE EXPRESSLY DISCLAIMED. TO THE EXTENT THAT THEY CANNOT BE DISCLAIMED, THE IMPLIED WARRANTIES ARE LIMITED IN DURATION TO THE LIFE OF THE EXPRESS WARRANTY. INCIDENTAL AND CONSEQUENTIAL DAMAGES ARE EXCLUDED FROM COVERAGE UNDER THIS WARRANTY. SOME STATES/COUNTRIES DO NOT ALLOW FOR THE DISCLAIMERS, LIMITATIONS AND EXCLUSIONS IDENTIFIED ABOVE, AS A RESULT, THEY MAY NOT APPLY TO YOU. THIS WARRANTY GIVES YOU SPECIFIC LEGAL RIGHTS, AND YOU MAY ALSO HAVE OTHER LEGAL RIGHTS WHICH VARY FROM STATE TO STATE AND COUNTRY TO COUNTRY.

WARRANTY INFORMATION

op5

Warranty Coverage and Exclusions

The purpose of this section is to help eliminate some of the more common misunderstandings regarding warranty coverage. The following information explains some of the types of services that are not covered by warranty. The provisions set forth following have been incorporated by reference into the Three Year Limited Warranty Against Corrosion Failure, the International Limited Outboard Warranty, and the United States and Canada Limited Outboard Warranty.

Keep in mind that warranty covers repairs that are needed within the warranty period because of defects in material and workmanship. Installation errors, accidents, normal wear, and a variety of other causes that affect the product are not covered.

Warranty is limited to defects in material or workmanship, but only when the consumer sale is made in the country to which distribution is authorized by us.

Should you have any questions concerning warranty coverage, contact your authorized dealer. They will be pleased to answer any questions that you may have.

GENERAL EXCLUSIONS FROM WARRANTY

1. Minor adjustments and tune-ups, including checking, cleaning or adjusting spark plugs, ignition components, carburetor settings, filters, belts, controls, and checking lubrication made in connection with normal services.
2. Factory Installed Jet Drive units – Specific parts excluded from the warranty are: The jet drive impeller and jet drive liner damaged by impact or wear, and water damaged drive shaft bearings as a result of improper maintenance.
3. Damage caused by neglect, lack of maintenance, accident, abnormal operation or improper installation or service.
4. Haul-out, launch, towing charges, removal and/or replacement of boat partitions or material because of boat design for necessary access to the product, all related transportation charges and/or travel time, etc. Reasonable access must be provided to the product for warranty service. Customer must deliver product to an authorized dealer.
5. Additional service work requested by customer other than that necessary to satisfy the warranty obligation.
6. Labor performed by other than an authorized dealer may be covered only under following circumstances: When performed on emergency basis (providing there are no authorized dealers in the area who can perform the work required or have no facilities to haul out, etc., and prior factory approval has been given to have the work performed at this facility).
7. All incidental and/or consequential damages (storage charges, telephone or rental charges of any type, inconvenience or loss of time or income) are the owner’s responsibility.

op6

Warranty Coverage and Exclusions

8. Use of other than Mercury Precision or Quicksilver parts when making warranty repairs.
9. Oils, lubricants or fluids changed as a matter of normal maintenance is customer's responsibility unless loss or contamination of same is caused by product failure that would be eligible for warranty consideration.
10. Participating in or preparing for racing or other competitive activity or operating with a racing type lower unit.
11. Engine noise does not necessarily indicate a serious engine problem. If diagnosis indicates a serious internal engine condition which could result in a failure, condition responsible for noise should be corrected under the warranty.
12. Lower unit and/or propeller damage caused by striking a submerged object is considered a marine hazard.
13. Water entering engine through the fuel intake, air intake or exhaust system. or submersion.
14. Failure of any parts caused by lack of cooling water, which results from starting motor out of water, foreign material blocking inlet holes, motor being mounted too high or trimmed too far out.
15. Use of fuels and lubricants which are not suitable for use with or on the product. Refer to the Maintenance Section.
16. Our limited warranty does not apply to any damage to our products caused by the installation or use of parts and accessories which are not manufactured or sold by us. Failures which are not related to the use of those parts or accessories are covered under warranty if they otherwise meet the terms of the limited warranty for that product.

WARRANTY INFORMATION

oq3

Transfer Of Warranty

The limited warranty is transferable to a subsequent purchaser, but only for the remainder of the unused portion of the limited warranty. This will not apply to products used for commercial applications.

To transfer the warranty to the subsequent owner, send or fax a copy of the bill of sale or purchase agreement, new owner's name, address and engine serial number to Mercury Marine's warranty registration department.

Upon processing the transfer of warranty, Mercury Marine will send registration verification to the new owner of the product by mail.

Mercury Marine
Attn: Warranty Registration Department
W6250 Pioneer Road
P.O. Box 1939
Fond du Lac, WI 54935-1939
Phone: 920-929-5054
Fax: 920-929-5893

There is no charge for this service.

For products purchased outside the United States and Canada, contact the distributor in your country, or the Mercury Marine Service Office closest to you.

GENERAL INFORMATION

BOATER'S RESPONSIBILITIES

The operator (driver) is responsible for the correct and safe operation of the boat and safety of its occupants and general public. It is strongly recommended that each operator (driver) read and understand this entire manual before operating the outboard.

Be sure at least one additional person on board is instructed in the basics of starting and operating the outboard and boat handling in case the driver is unable to operate the boat.

BEFORE OPERATING YOUR OUTBOARD

Read this manual carefully. Learn how to operate your outboard properly. If you have any questions, contact your dealer.

Safety and operating information that is practiced along with using good common sense can help prevent personal injury and product damage.

This manual as well as safety labels posted on the outboard use the following safety alerts to draw your attention to special safety instructions that should be followed.

⚠DANGER

DANGER – Immediate hazards which WILL result in severe personal injury or death.

⚠WARNING

WARNING – Hazards or unsafe practices which COULD result in severe personal injury or death.

⚠CAUTION

CAUTION – Hazards or unsafe practices which could result in minor injury or product or property damage.

GENERAL INFORMATION

BOAT HORSEPOWER CAPACITY

Do not overpower or overload your boat. Most boats will carry a required capacity plate indicating the maximum acceptable power and load as determined by the manufacturer following certain federal guidelines. If in doubt, contact your dealer or the boat manufacturer.

⚠WARNING

Using an outboard that exceeds the maximum horsepower limit of a boat can 1. cause loss of boat control 2. place too much weight at the transom altering the designed flotation characteristics of the boat or 3. cause the boat to break apart particularly around the transom area. Overpowering a boat can result in serious injury, death or boat damage.

GENERAL INFORMATION

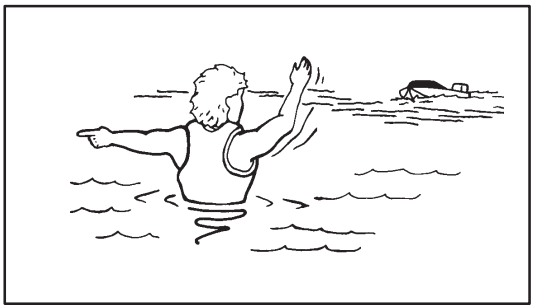

PROTECTING PEOPLE IN THE WATER

While You are Cruising

It is very difficult for a person standing or floating in the water to take quick action to avoid a boat heading in their direction even at slow speed.

Always slow down and exercise extreme caution any time you are boating in an area where there might be people in the water.

Whenever a boat is moving (coasting) and the outboard gear shift is in neutral position, there is sufficient force by the water on the propeller to cause the propeller to rotate. This neutral propeller rotation can cause serious injury.

While Boat is Stationary

Shift outboard into neutral and shut off the engine before allowing people to swim or be in the water near your boat.

⚠WARNING

Stop your engine immediately whenever anyone in the water is near your boat. Serious injury to the person in the water is likely if contacted by a rotating propeller, a moving boat, a moving gear housing or any solid device rigidly attached to a moving boat or gear housing.

GENERAL INFORMATION

gob8

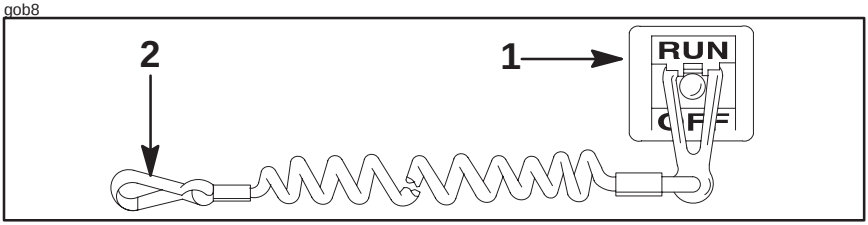

obg6

Lanyard Stop Switch

1 The purpose of a lanyard stop switch is to turn off the engine when the operator moves far enough away from the operator's position (as in accidental ejection from the operator's position) to activate the switch. Tiller handle outboards and some remote control units are equipped with a lanyard stop switch. A lanyard stop switch can be installed as an accessory – generally on the dashboard or side adjacent to the operator's position.

2 The lanyard is a cord usually between 4 and 5 feet (1220 and 1524 mm) in length when stretched out with an element on one end made to be inserted into the switch and a snap on the other end for attaching to the operator. The lanyard is coiled to make its at-rest condition as short as possible so as to minimize the likelihood of lanyard entanglement with nearby objects. It is made as long as it is in its stretched condition to minimize the likelihood of accidental activation should the operator choose to move around in an area close to the normal operator's position. If it is desired to have a shorter lanyard, wrap the lanyard around the operator's wrist or leg, or tie a knot in the lanyard.

(continued on next page)

GENERAL INFORMATION

Lanyard Stop Switch (Continued)

Read the following Safety Information before proceeding.

Important Safety Information: The purpose of a lanyard stop switch is to stop the engine when the operator moves far enough away from the operator's position to activate the switch. This would occur if the operator accidentally falls overboard or moves within the boat a sufficient distance from the operator's position. Accidental ejections and falls overboard are more likely to occur in certain types of boats such as low sided inflatables or bass boats, high-performance boats and light, sensitive-handling fishing boats operated by hand-tiller. Accidental ejections and falls overboard are also likely to occur as a result of poor operating practices such as sitting on the back of the seat or gunwale at planing speeds, standing at planing speeds, sitting on elevated fishing boat decks, operating at planing speeds in shallow or obstacle-infested waters, releasing your grip on a steering wheel or tiller handle that is pulling in one direction, drinking alcohol or consuming drugs, or daring, high-speed boat maneuvers.

While activation of the lanyard stop switch will stop the engine immediately, a boat will continue to coast for some distance depending upon the velocity and degree of any turn at shut-down. However, the boat will not complete a full circle. While the boat is coasting, it can cause injury to anyone in the boat's path as seriously as the boat would when under power.

We strongly recommend that other occupants be instructed on proper starting and operating procedures should they be required to operate the engine in an emergency (e.g. if the operator is accidentally ejected).

⚠WARNING

Should the operator fall out of the boat, the possibility of serious injury or death from being run over by the boat can be greatly reduced by stopping the engine immediately. Always properly connect both ends of the stop switch lanyard – to the stop switch and the operator.

(continued on next page)

GENERAL INFORMATION

Lanyard Stop Switch (Continued)

Accidental or unintended activation of the switch during normal operation is also a possibility. This could cause any, or all, of the following potentially hazardous situations:

1. Occupants could be thrown forward due to unexpected loss of forward motion – a particular concern for passengers in the front of the boat who could be ejected over the bow and possibly struck by the gear case or propeller.
2. Loss of power and directional control in heavy seas, strong current or high winds.
3. Loss of control when docking.

⚠WARNING

Avoid serious injury or death from deceleration forces resulting from accidental or unintended stop switch activation. The boat operator should never leave the operator's station without first disconnecting the stop switch lanyard from the operator.

gob3

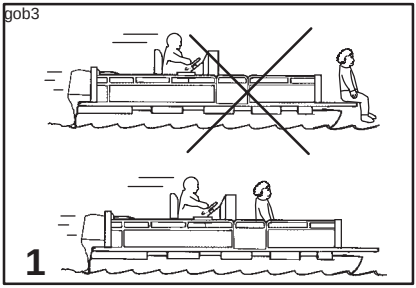

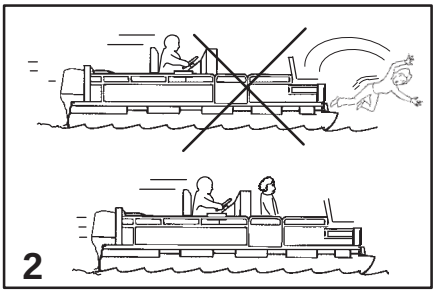

obh2

Passenger Safety Message – Pontoon Boats and Deck Boats

Whenever the boat is in motion, observe the location of all the passengers. Do not allow any passengers to stand or use seats other than those designated for traveling faster than idle speed, because a sudden reduction in boat speed, such as the result of plunging into a large wave or wake, a sudden throttle reduction, or a sharp change of boat direction, could throw them over the front of boat. Falling over the front of the boat between the two pontoons will position them to be run over by the outboard.

1 Boats having an open front deck:

No one should ever be on the deck in front of the fence while the boat is in motion. Keep all passengers behind the front fence or enclosure.

Persons on the front deck could easily be thrown overboard or persons dangling their feet over the front edge could get their legs caught by a wave and pulled into the water.

2 Boats with front-mounted, raised pedestal fishing seats:

These elevated fishing seats are not intended for use when the boat is traveling faster than idle or trolling speed. Sit only in seats designated for traveling at faster speeds.

Any unexpected sudden reduction in boat speed could result in the elevated passenger falling over the front of the boat.

⚠WARNING

Avoid serious injury or death from falling over the front end of a pontoon or deck boat and being run over by the outboard. Stay back from the front end of the deck and remain seated while the boat is in motion.

gob4

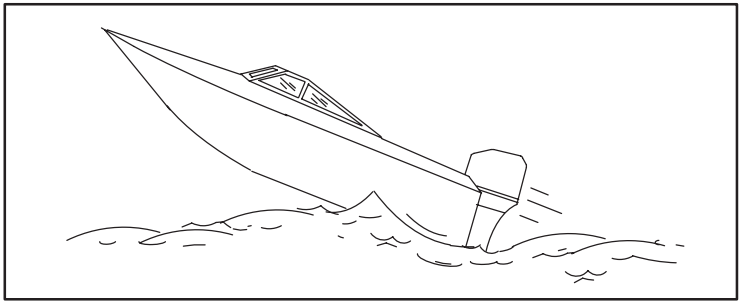

obm1

Wave And Wake Jumping

Operating recreational boats over waves and wakes is a natural part of boating. However, when this activity is done with sufficient speed to force the boat hull partially or completely out of the water, certain hazards arise, particularly when the boat re-enters the water.

The primary concern is the boat changing direction while in the midst of the jump. In such case the landing may cause the boat to veer violently in a new direction. Such a sharp change in direction can cause occupants to be thrown out of their seats, or out of the boat.

There is another less common hazardous result from allowing your boat to launch off a wave or wake. If the bow of your boat pitches down far enough while airborne, upon water contact it may penetrate under the water surface and “submarine” for an instant. This will bring the boat to a nearly instantaneous stop and can send the occupants flying forward. The boat may also steer sharply to one side.

⚠WARNING

Avoid serious injury or death from being thrown within or out of a boat when it lands after jumping a wave or wake. Avoid wave or wake jumping whenever possible. Instruct all occupants that if a wake or wave jump occurs, get low and hang on to any boat hand hold.

GENERAL INFORMATION

gob4

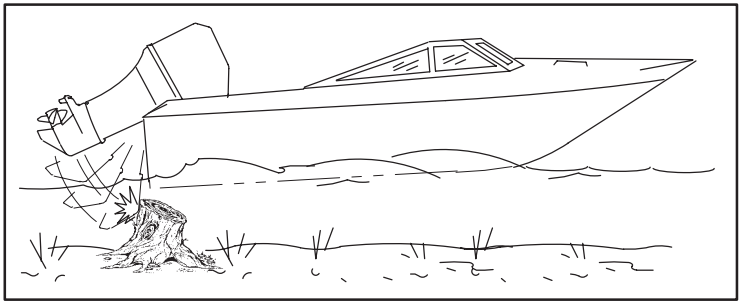

obt4

Impact With Underwater Hazards

Reduce speed and proceed with caution whenever you drive a boat in shallow water areas or in areas where you suspect underwater obstacles may exist which could be struck by the outboard or the boat bottom. **The most important thing you can do to help reduce injury or impact damage from striking a floating or underwater object is to control the boat speed. Under these conditions, boat speed should be kept to a minimum planing speed (15 to 25 MPH).**

⚠WARNING

To avoid serious injury or death from all or part of an outboard coming into the boat after striking a floating or underwater obstacle maintain a top speed no greater than minimum planing speed.

Striking a floating or underwater object could result in an infinite number of situations. Some of these situations could result in the following:

a. Part of the outboard or the entire outboard could break loose and fly into the boat.

b. The boat could move suddenly in a new direction. Such a sharp change in direction can cause occupants to be thrown out of their seats or out of the boat.

c. A rapid reduction in speed. This will cause occupants to be thrown forward, or even out of the boat.

d. Impact damage to the outboard and/or boat.

(continued on next page)

obt6

Impact With Underwater Hazards

Keep in mind, the most important thing you can do to help reduce injury or impact damage in these situations is control the boat speed. Boat speed should be kept to a minimum planing speed when driving in waters known to have underwater obstacles.

After striking a submerged object, stop the engine as soon as possible and inspect the outboard for any broken or loose parts. If damage is present or suspected, the outboard should be taken to an authorized dealer for a thorough inspection and necessary repair.

The boat should also be checked for any hull fractures, transom fractures, or water leaks.

Operating a damaged outboard could cause additional damage to other parts of the outboard, or could affect control of the boat. If continued running is necessary, do so at greatly reduced speeds.

⚠WARNING

Avoid serious injury or death from loss of boat control. Continued boating with major impact damage can result in sudden outboard component failure with or without subsequent impacts. Have the outboard thoroughly inspected and any necessary repairs made.

ADDITIONAL SAFETY INSTRUCTIONS FOR HAND TILLED OUTBOARDS

When operating a hand tilled outboard, no operator, passenger, or cargo should occupy the space directly in front of the outboard. This space may be violently filled by the outboard if the outboard should kick up from striking an underwater obstacle.

GENERAL INFORMATION

gob4

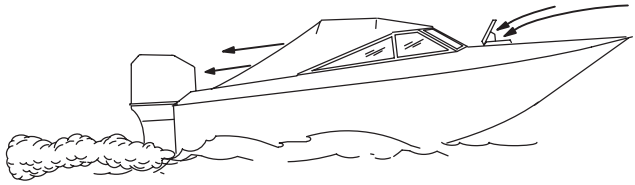

1

Courtesy of ABYC

obi2

Exhaust Emissions

BE ALERT TO CARBON MONOXIDE POISONING

Carbon monoxide is present in the exhaust fumes of all internal combustion engines including the outboards, sterndrives and inboard engines that propel boats, as well as the generators that power various boat accessories. Carbon monoxide is a deadly gas that is odorless, colorless and tasteless.

Early symptoms of carbon monoxide poisoning, which should not be confused with seasickness or intoxication, include headache, dizziness, drowsiness, and nausea.

⚠WARNING

Avoid the combination of a running engine and poor ventilation. Prolonged exposure to carbon monoxide in sufficient concentration can lead to unconsciousness, brain damage, or death.

GOOD VENTILATION

Ventilate passenger area, open side curtains, or forward hatches to remove fumes.

1 Example of desired air flow through the boat.

gob39

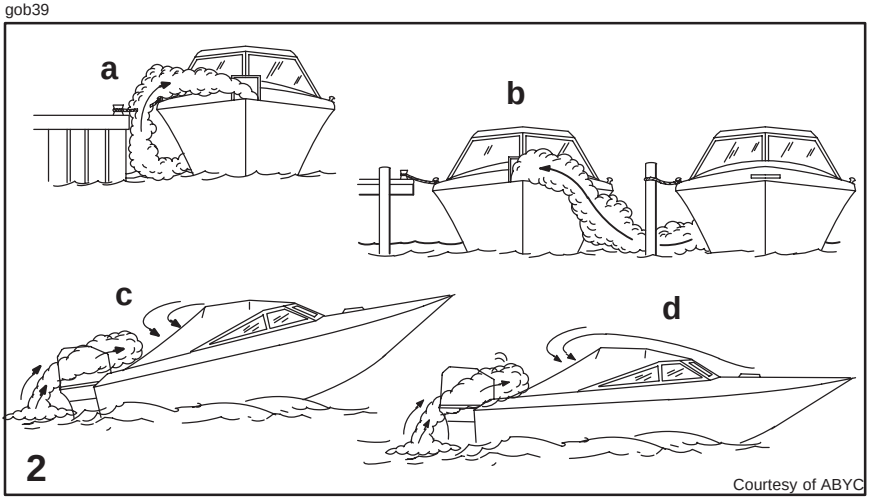

obi3

Exhaust Emissions (Continued)

POOR VENTILATION

Under certain running and/or wind conditions, permanently enclosed or canvas enclosed cabins or cockpits with insufficient ventilation may draw in carbon monoxide. Install one or more carbon monoxide detectors in your boat.

Although the occurrence is rare, on a very calm day, swimmers and passengers in an unclosed area of a stationary boat that contains or is near a running engine may be exposed to a hazardous level of carbon monoxide.

2 Examples of Poor Ventilation:

While boat is stationary

a. Running the engine when the boat is moored in a confined space.

b. Mooring close to another boat that has its engine running.

While boat is moving

c. Running the boat with the trim angle of the bow too high.

d. Running the boat with no forward hatches open (station wagon effect).

FEATURES

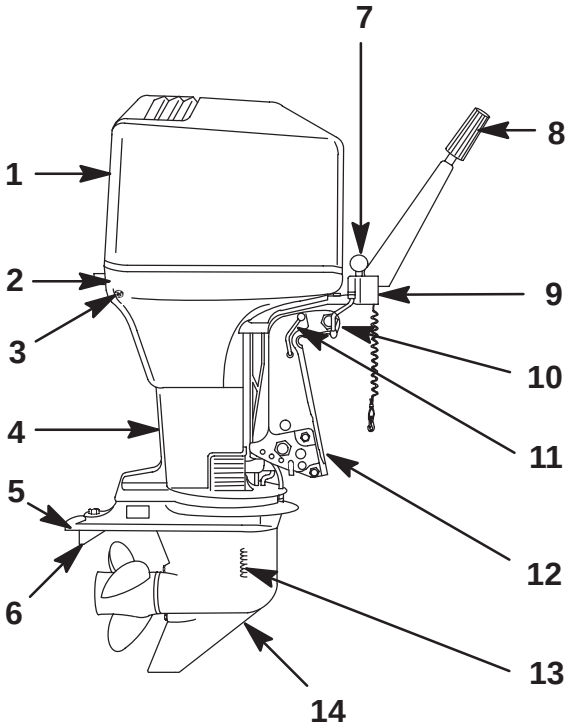

COMPONENT IDENTIFICATION

1. Top Cowl
2. Bottom Cowl
3. Water Pump Indicator Hole
4. Drive Shaft Housing
5. Anti-Ventilation Plate
6. Trim Tab
7. Shift Handle
8. Throttle Grip
9. Lanyard Stop Switch
10. Steering Friction Adjustment Knob
11. Tilt Lock Lever
12. Transom Brackets
13. Cooling Water Intake
14. Gear Case

SPECIFICATIONS

Engine Type	Two Cycle – 3 Cylinder
Horsepower Rating	75 HP (56 Kw)
Idle speed (in Gear)	650-700 RPM
Maximum Throttle Speed	4750-5250 RPM
Cylinder Bore	88.9mm (3.500 in.)
Piston Displacement	1385.8cc (84.57 cu. in.)
Spark Plug	NGK BUZHW-2
Spark Plug Gap	Surface Gap
Recommended Gasoline	Any leaded or unleaded gasoline with a minimum posted octane rating of 87 or Ron of 92.
Recommended Oil	Quicksilver or Mercury Precision Lubricants NMMA/BIA Certified TC-W3 2-Cycle Outboard Oil
Gasoline/Oil Mixture Ratio During Break-in Period After Break-in Period	 25:1 (4%) 50.1 (2%)
Gear Case Oil Capacity	22.5 fl. oz. (666 ml)

INSTALLATION

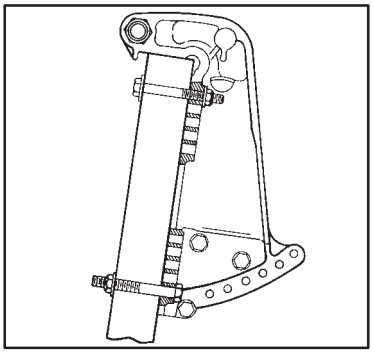

INSTALLING OUTBOARD

We strongly recommend that your dealer install your outboard and related accessories to ensure proper installation and good performance. If you install the outboard yourself, follow instructions in the outboard installation manual which is provided with the outboard.

⚠WARNING

Before operation, the outboard must be correctly installed with four mounting bolts shown. Failure to correctly fasten outboard could result in outboard ejecting off boat transom causing serious injury, death, or property damage.

FUEL & OIL

MIXING RATIO

During Engine Break-in 25:1 (4%)

After Break-in 50:1 (2%)

Pour oil into fuel tank.

Pour gasoline into fuel tank.

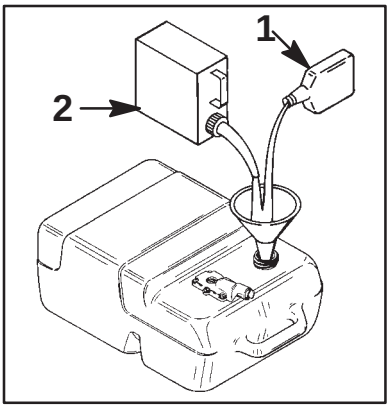

1 Quicksilver or Mercury Precision Lubricants NMMA/BIA Certified TC-W3 2-Cycle Outboard Oil.

2 Gasoline.

⚠WARNING

Avoid serious injury or death from gasoline fire or explosion. Carefully follow all fuel system service instructions. Always stop the engine and DO NOT smoke or allow open flames or sparks in the area while servicing any part of the fuel system.

ENGINE BREAK-IN

Engine Break-in Fuel Mixture

Use a 25:1 (4%) gasoline/oil mixture in the first tank of fuel.

Engine Break-in Procedure

Vary the throttle setting during the first hour of operation. During the first hour of operation, avoid remaining at a constant speed for more than two minutes and avoid sustained wide open throttle.

OPERATION

Pre-Starting Instructions

Connect fuel hose to tank.

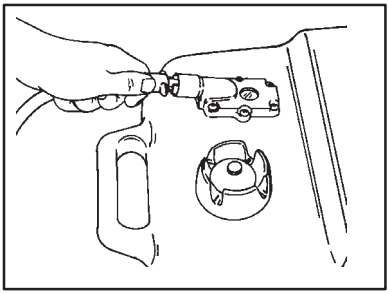

Connect fuel hose to outboard.

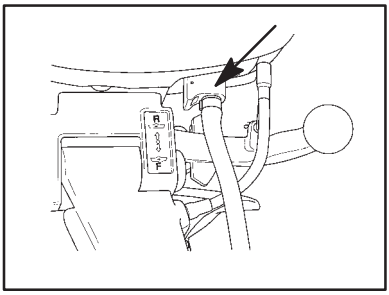

Open fuel tank screw (in cap) on manual venting type tanks.

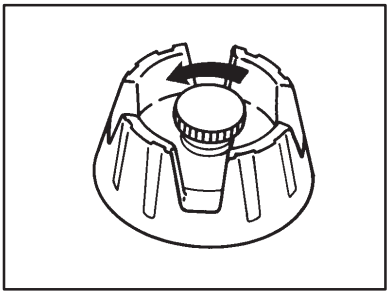

Prime fuel to the carburetors.

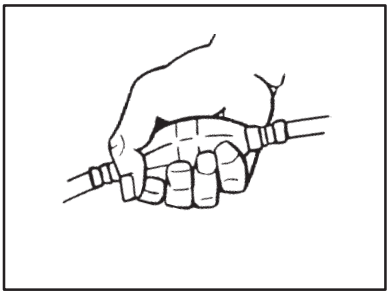

OPERATION

Set to RUN.

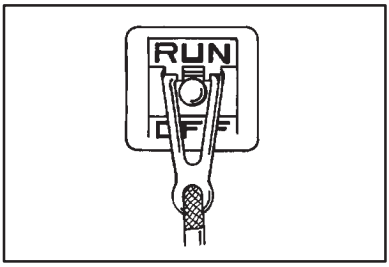

Set tilt lock lever to TILT/LOCK position.

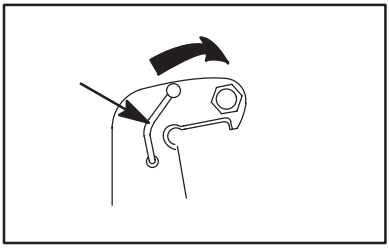

Set shift handle to Neutral.

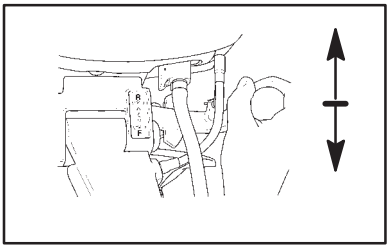

Set throttle indicator between SLOW and START/SHIFT.

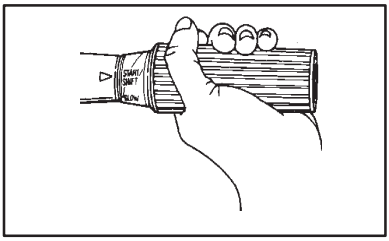

⚠CAUTION

Do not operate outboard out of water. The water pump has a rubber impeller which can be damaged by running dry.

OPERATION

Manual Starting Models

If engine is cold, press in the fuel primer rapidly 4 to 6 times.

NOTE: For initial start of a new engine or first start after a prolonged storage, primer lines may have air in them. In this case depress primer several times until fluid can be felt and then the normal 4 to 6 rapid primes.

Pull the starter rope.

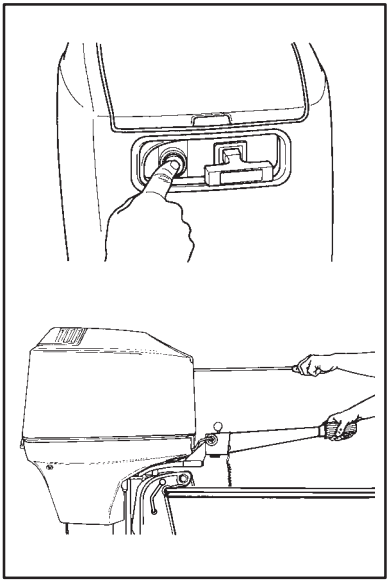

Electric Starting Models

Turn ignition key to START position and start the engine. If engine is cold, push in on key to prime the engine while cranking. If engine fails to start in ten seconds, wait 30 seconds and try again. If engine begins to stall, re-prime (push key in) until engine is running smoothly.

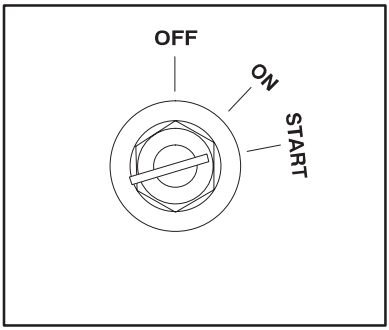

All Models

Check for a steady stream of water coming out of the water pump indicator hole.

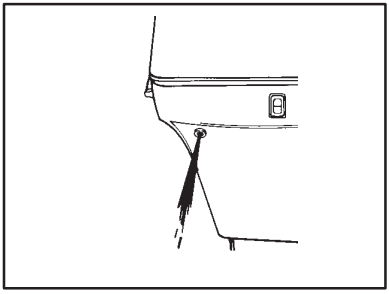

OPERATION

WARNING HORN SYSTEM

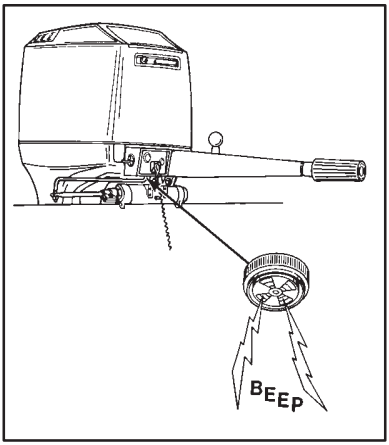

The warning horn will sound if engine overheats. If engine overheats,immediately reduce throttle speed to idle. Shift outboard into neutral and check for a steady stream of water coming out of the water pump indicator hole.

If no water is coming out of the water pump indicator or flow is intermittent, stop engine and check cooling water intakes for obstruction. If no obstruction is found, may indicate a blockage in the cooling system or water pump problem. Have the outboard checked by your dealer. Operating the engine while overheated will cause engine damage. See Note following.

Even if a steady stream of water is coming out of the water pump indicator hole, there still may be insufficient cooling water or an engine problem. Stop engine and have it checked by your dealer. Operating the engine while overheated will cause engine damage. See Note following.

NOTE : If you are in a stranded situation, stopping the engine and allowing it to cool back down will give you some low speed (idle) running time before the engine starts to overheat again.

OPERATION

SHIFTING

Set the throttle indicator between SLOW and START/SHIFT.

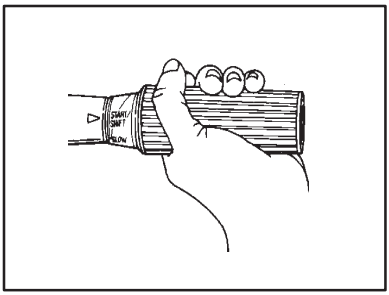

Set shift handle into Forward or Reverse.

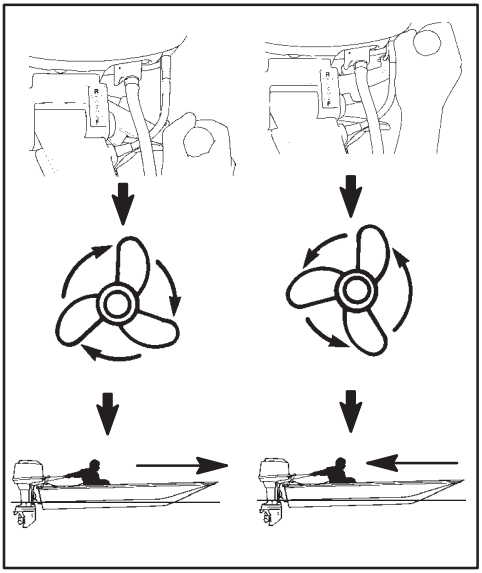

Turn throttle grip to increase speed.

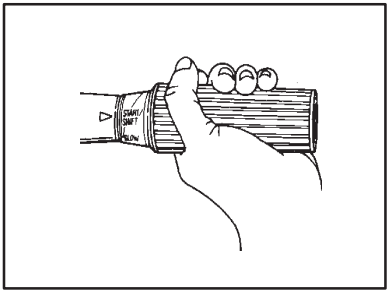

OPERATION

STOPPING THE ENGINE

Turn throttle grip to decrease speed.

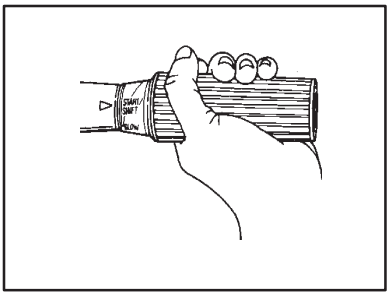

Push engine stop button.

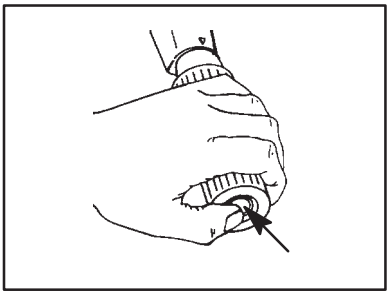

OPERATION

EMERGENCY STARTING (MANUAL STARTING MODELS)

Set the shift handle to Neutral.

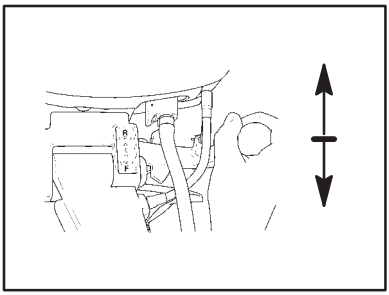

Remove the top cover.

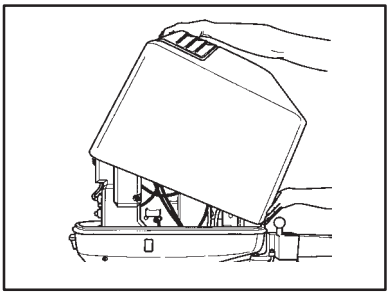

If starter rope is intact, pull rope out of rewind housing and tie knot as shown.

Remove retainer from end of rope and untie the retainer knot.

1 Tie Knot

2 Retainer

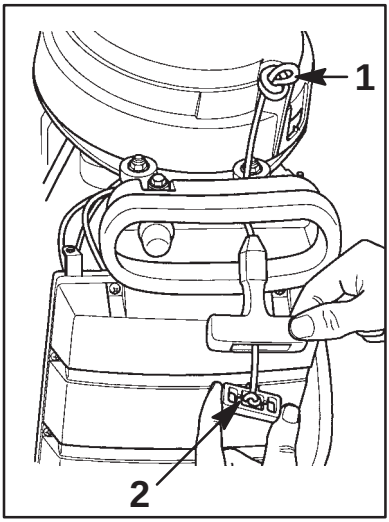

Remove the rewind starter.

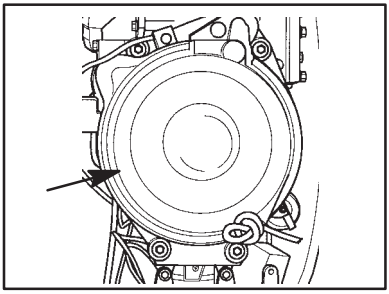

Wind emergency rope around flywheel.

Pull rope to start.

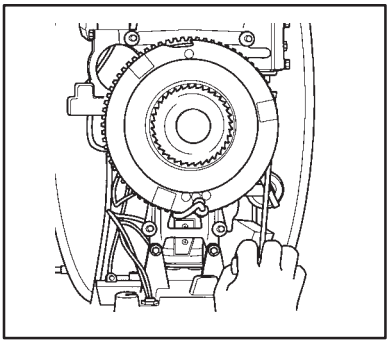

⚠WARNING

When using emergency starter rope to start engine, the start-in-gear protection provided by the rewind starter is inoperative. Make sure to set the outboard gear shift into neutral to prevent outboard from starting in gear. Sudden unexpected acceleration could result in serious injury or death.

⚠WARNING

The exposed moving flywheel can cause serious injury. Keep your hands, hair, clothing, tools, and other objects away from engine when starting or running the engine.
Do not attempt to reinstall the rewind starter or top cover when engine is running.

OPERATION

EMERGENCY STARTING (ELECTRIC STARTING MODELS)

Set the shift handle to Neutral.

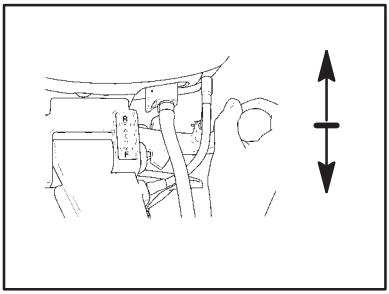

Remove the top cover.

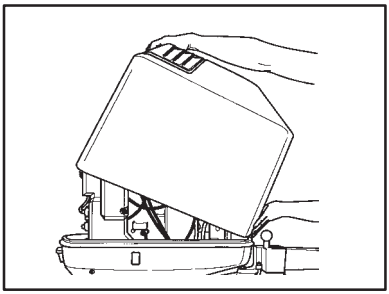

Remove the flywheel cover.

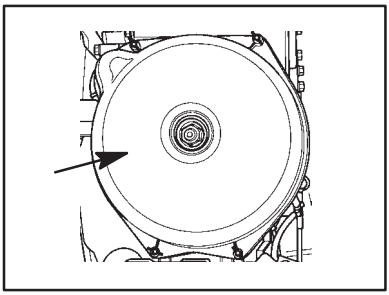

Turn the ignition key to ON position.

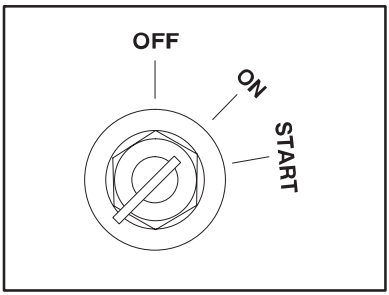

If engine is cold, push in the fuel primer button and pump up the fuel pressure with the fuel line primer bulb.

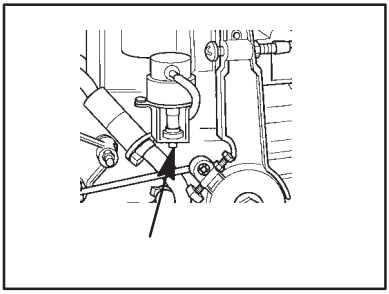

Wind emergency rope around flywheel.

Pull rope to start.

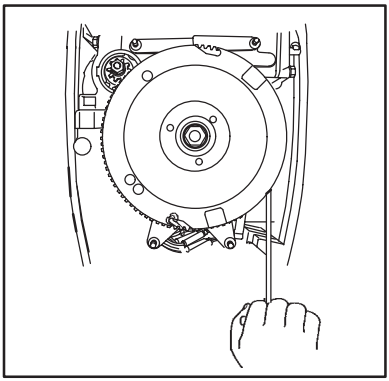

⚠WARNING

When using emergency starter rope to start engine, the start-in-gear protection provided by the neutral interlock switch is inoperative. Make sure to set the outboard gear shift into neutral to prevent outboard from starting in gear. Sudden unexpected acceleration could result in serious injury or death.

⚠WARNING

The exposed moving flywheel can cause serious injury. Keep your hands, hair, clothing, tools, and other objects away from engine when starting or running the engine. Do not attempt to reinstall the flywheel cover or top cover when engine is running.

OPERATION

TILTING UP OUTBOARD

Stop engine.

Push tilt lock lever to TILT.

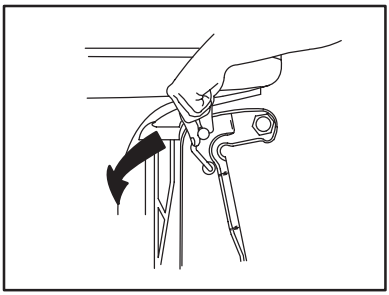

Tilt up the outboard. Set tilt lock lever to LOCK/RUN.

Rotate the tilt support lever up. Rest outboard on the tilt support lever.

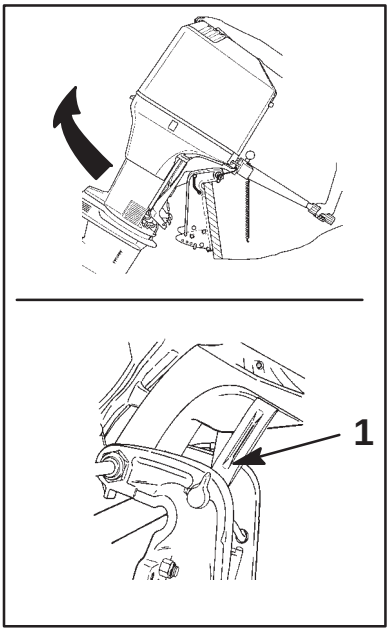

1 Tilt Support Lever

OPERATION

RETURN OUTBOARD TO OPERATING POSITION

Set tilt lock lever to TILT.

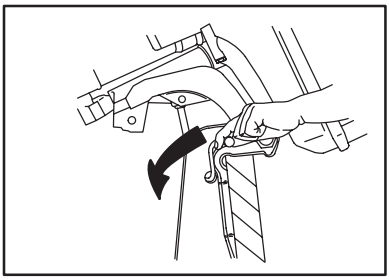

Tilt up outboard and release tilt support lever.

Lower outboard.

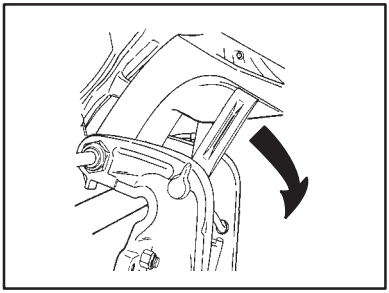

Set tilt lock lever to LOCK/RUN.

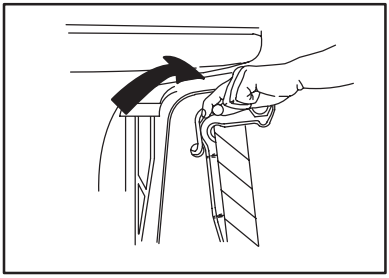

⚠WARNING

Before operating, the outboard must be locked in its tilt position by moving the tilt lock lever to LOCK/RUN position. Failure to lock the outboard in its tilt position could result in the outboard tilting up out of the water during deceleration or while operating in reverse, resulting in possible loss of boat control. Loss of boat control can result in serious injury, death, or boat damage.

OPERATION

SHALLOW WATER OPERATION

Push tilt lock lever to TILT.

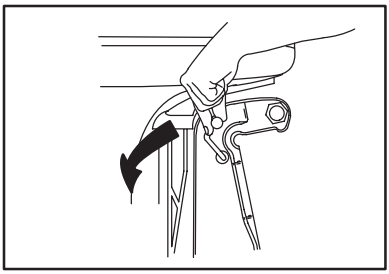

Tilt outboard up to prevent gear case from hitting bottom.

Be sure the water intakes remain in the water.

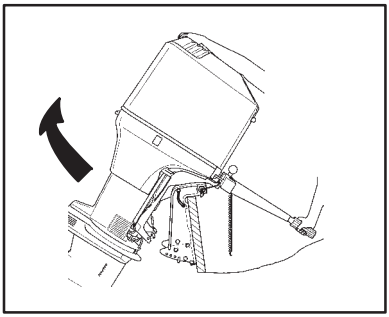

Set tilt lock lever to RUN/LOCK.

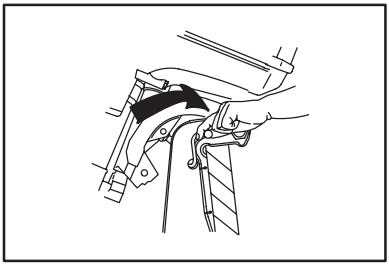

Operate outboard at slow speed while tilted up for shallow water operation.

Keep the water intakes submerged and continue to check for water discharged from the water pump indicator.

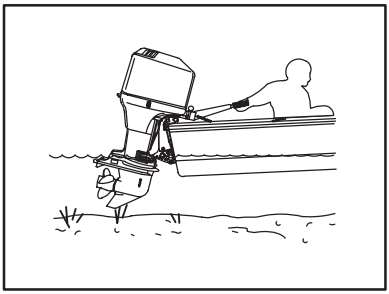

OPERATION

TILT PIN ADJUSTMENT

The boat squats

1 Move down.

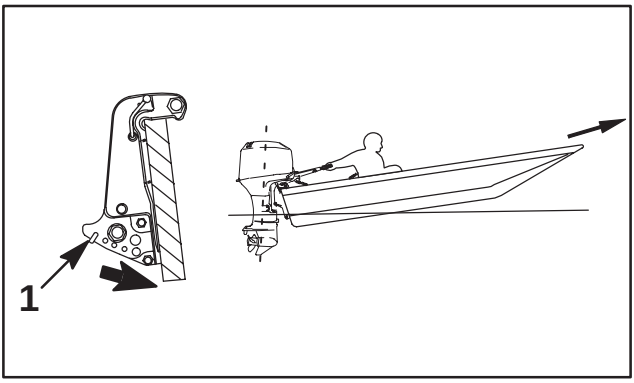

The boat plows

2 Move up.

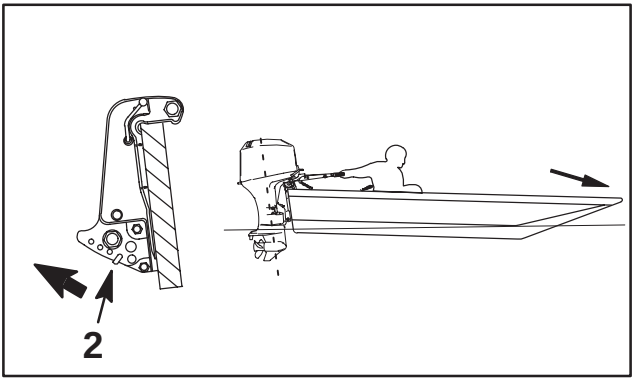

Correct

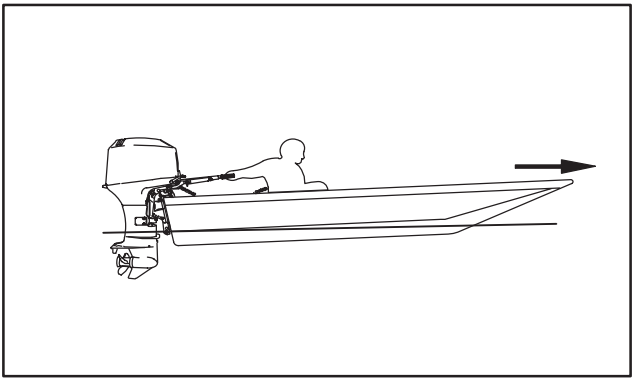

OPERATION

TRIM TAB ADJUSTMENT

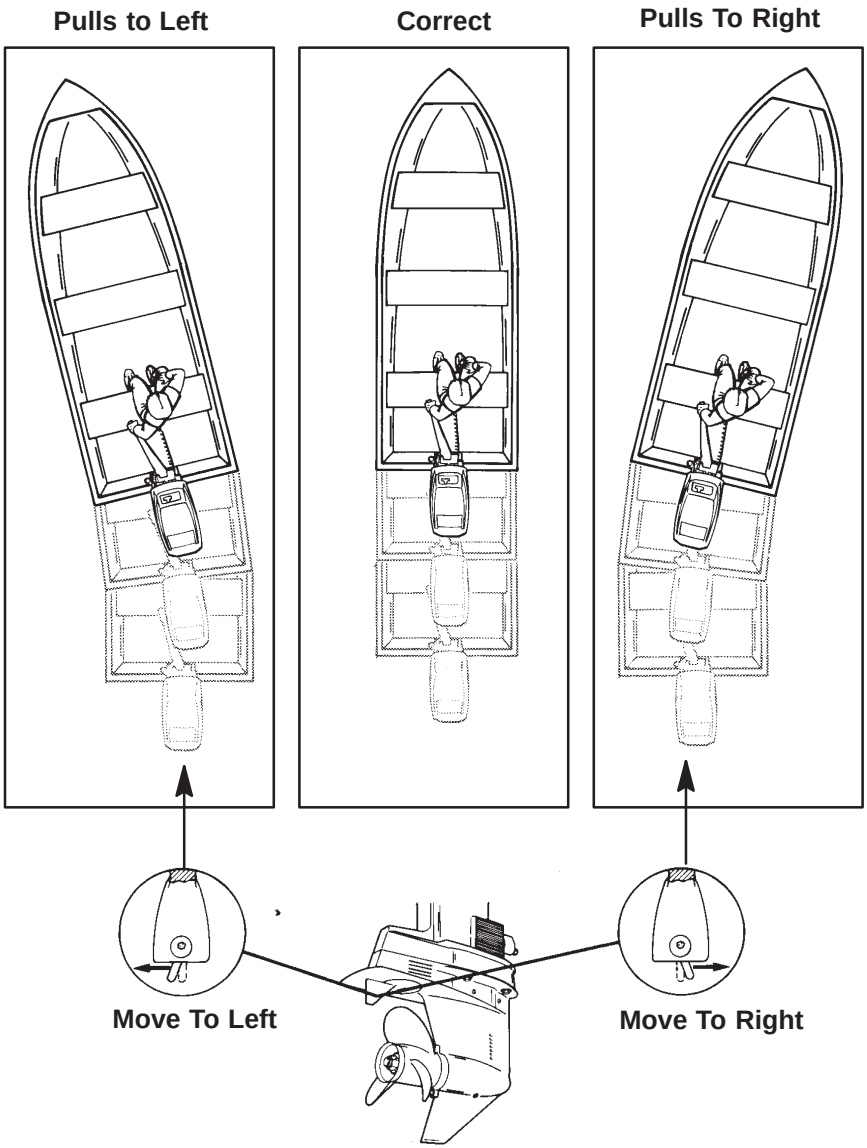

OPERATION

THROTTLE GRIP FRICTION ADJUSTMENT

Adjust to hold throttle at desired speed.

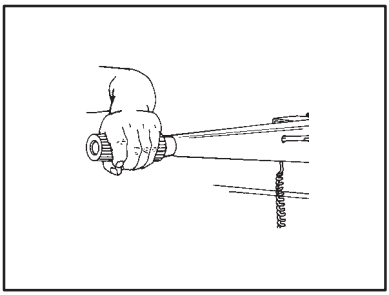

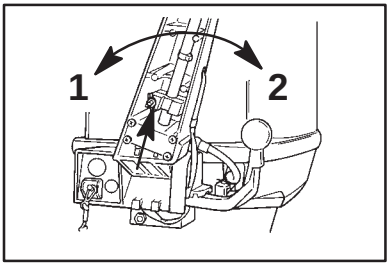

1 To Loosen

2 To Stiffen

STEERING FRICTION ADJUSTMENT

Adjust knob for steering friction desired.

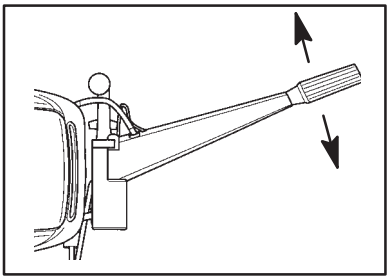

⚠WARNING

Avoid possible serious injury or death from loss of boat control. Maintain sufficient steering friction to prevent the outboard from steering into a full turn if the tiller handle is released.

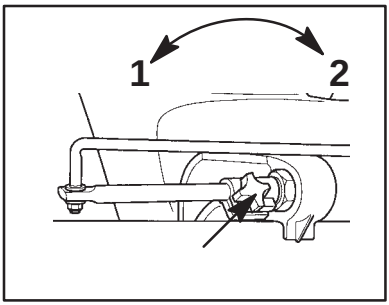

1 To Loosen

2 To Stiffen

MAINTENANCE

oti1

EPA Emissions Regulations

All new outboards manufactured by Mercury Marine are certified to the United States Environmental Protection Agency as conforming to the requirements of the regulations for the control of air pollution from new outboard motors. This certification is contingent on certain adjustments being set to factory standards. For this reason, the factory procedure for servicing the product must be strictly followed and, wherever practicable, returned to the original intent of the design. **Maintenance, replacement, or repair of the emission control devices and systems may be performed by any marine SI engine repair establishment or individual.**

oti8

EMISSION CERTIFICATION LABEL

An emission certification label, showing emission levels and engine specifications directly related to emissions, is placed on the engine at time of manufacture.

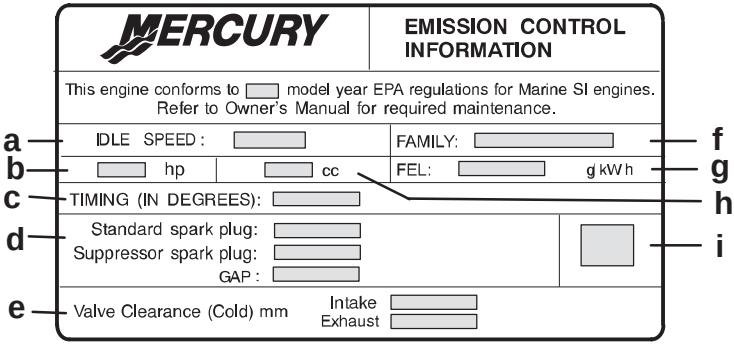

a - Idle Speed
b - Engine Horsepower
c - Timing Specification
d - Recommended Spark Plug & Gap
e - Valve Clearance (if Applicable)
f - Family Number
g - Maximum Emission Output for the Engine Family
h - Piston Displacement
i - Date of Manufacture

oti7

OWNER RESPONSIBILITY

The owner/operator is required to have engine maintenance performed to maintain emission levels within prescribed certification standards.

The owner/operator is not to modify the engine in any manner that would alter the horsepower or allow emissions levels to exceed their predetermined factory specifications.

MAINTENANCE

REMOVING TOP COVER

Push lever down.

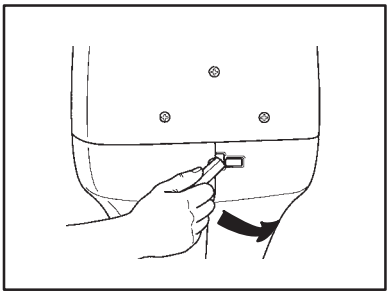

Lift cover off.

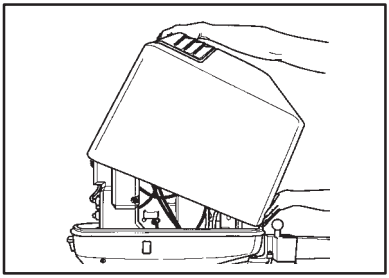

PROPELLER SELECTION

Install a propeller that will allow the engine to operate within the 4750-5250 RPM range when running at maximum throttle speed.

Check that engine is not over-revving (RPM is too high) or lugging (RPM is too low) when operating at maximum throttle speed.

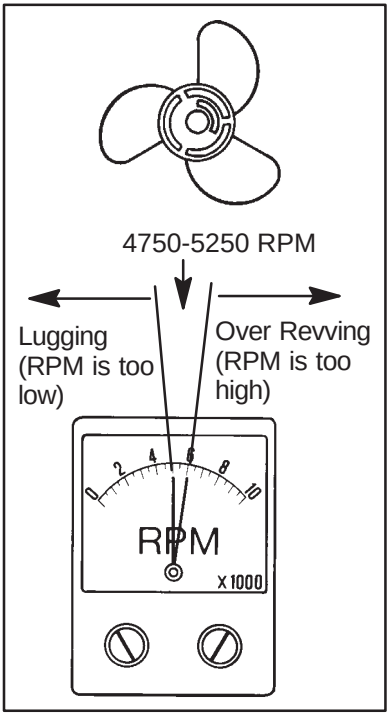

FUEL SYSTEM

Fuel Pump Filter

Remove the filter.

1 Cap

2 Sight Bowl

3 O-Ring Seal

4 Float

5 Filter

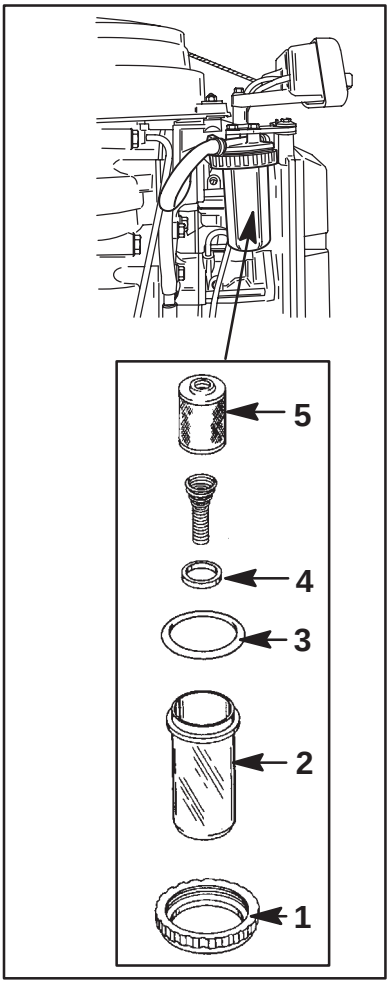

⚠WARNING

Avoid serious injury or death from gasoline fire or explosion. Carefully follow all fuel system service instructions. Always stop the engine and DO NOT smoke or allow open flames or sparks in the area while servicing any part of the fuel system.

Wash sight bowl and filter in cleaning solvent.

Carburetor Fuel Bowl

Loosen (1 turn) main jet plugs on side of carburetors to drain fuel.

Dispose of fuel properly.

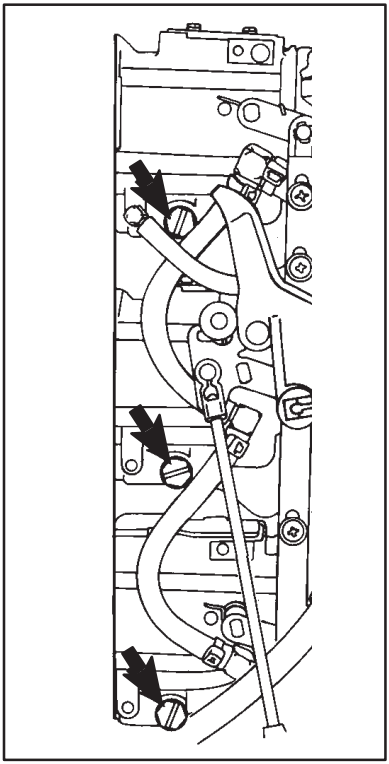

⚠WARNING

Avoid serious injury or death from gasoline fire or explosion. Carefully follow all fuel system service instructions. Always stop the engine and DO NOT smoke or allow open flames or sparks in the area while servicing any part of the fuel system.

MAINTENANCE

PROPELLER REPLACEMENT

⚠WARNING

If the propeller shaft is rotated while the engine is in gear, there is the possibility for the engine to crank over and start. To prevent this type of accidental engine starting and possible serious injury caused from being struck by a rotating propeller, always set the gear shift into neutral and remove spark plug leads when you are servicing the propeller.

Set shift handle to Neutral.

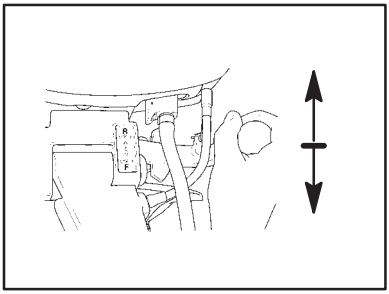

Remove spark plug leads.

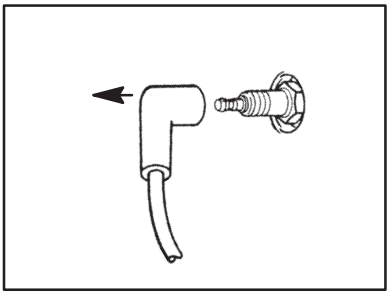

Remove propeller nut and propeller.

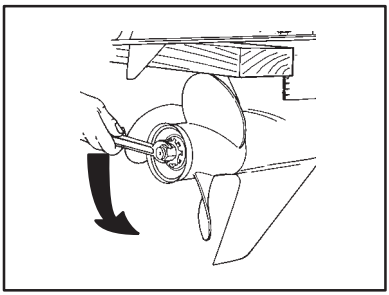

MAINTENANCE

PROPELLER REPLACEMENT (CONTINUED)

Apply lubricant to shaft.

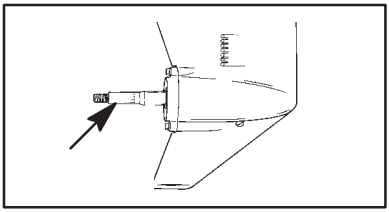

Flo-Torq I – Install propeller.

1 Thrust Washer

2 Continuity Washer

3 Thrust Hub

4 Locknut Retainer

5 Locknut

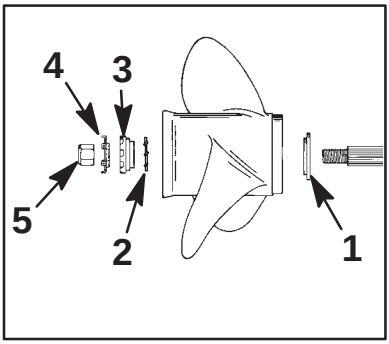

Flo-Torq II – Install propeller.

1 Thrust Washer

2 Replaceable Drive Sleeve

3 Thrust Hub

4 Locknut Retainer

5 Locknut

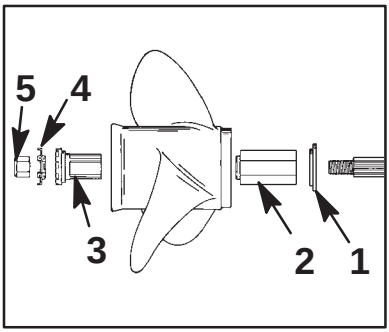

Secure propeller with locknut.

1 Tighten locknut to 55 lb. ft. (75.0 N·m).

2 Bend tabs into thrust hub.

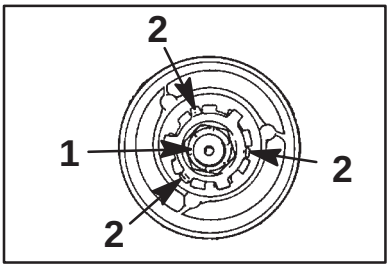

MAINTENANCE

LUBRICATION POINTS

Lubricate points 1 thru 4 every 30 days with Mercury Precision or Quicksilver 2-4-C Marine Lubricant with Teflon.

1 Swivel Bracket

2 Tilt Support Lever

3 Tilt Tube

4 Tiller Handle

5 Propeller Shaft - Lubricate every 30 days with Mercury Precision or Quicksilver Anti-Corrosion Grease or 2-4-C Marine Lubricant with Teflon.

6 Gear Oil - Check every 50 hours of use or once each month.

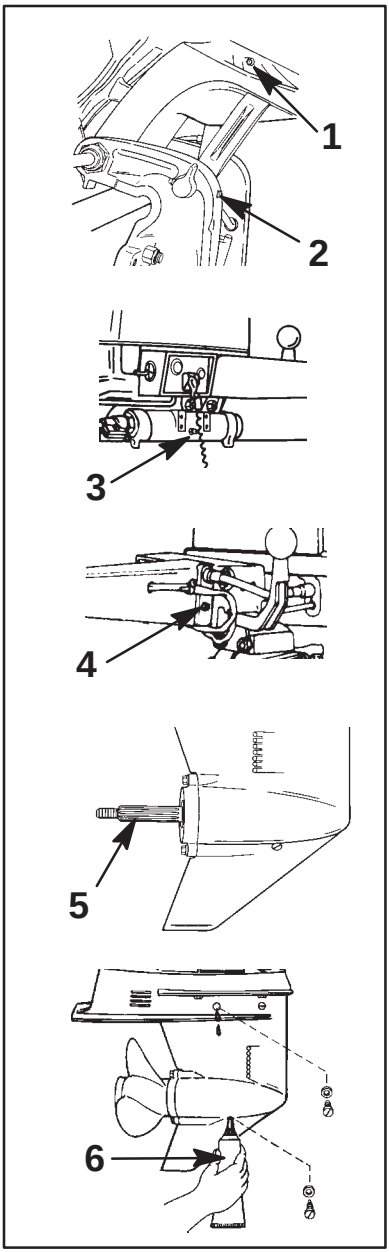

MAINTENANCE

LUBRICATION POINTS

Gear Case Lubricant

Drain and replace gear case lubricant after the first 20 hours of use than after every 100 hours of use.

Check gear case lubricant level every 50 hours of use or every 30 days.

When adding or changing gear case lubricant, visually check for the presence of water in the lubricant. If water is present, it may have settled to the bottom and will drain out prior to the lubricant or it may be mixed with the lubricant giving it a milky colored appearance. If water is noticed, have the gear case checked by your dealer. Water in the lubricant may result in premature bearing failure or, in freezing weather, will turn to ice and damage the gear case.

Whenever you remove the fill/drain plug, examine the magnetic end for metal particles. A small amount of metal filings or fine metal particles indicates normal gear wear. An excessive amount of metal filings or larger particles (chips) may indicate abnormal gear wear and should be checked by an authorized dealer.

Draining Gear Case

Position outboard vertically.

Remove Vent plugs and Fill/Drain plug.

1 Fill/Drain Plug

2 Vent Plugs

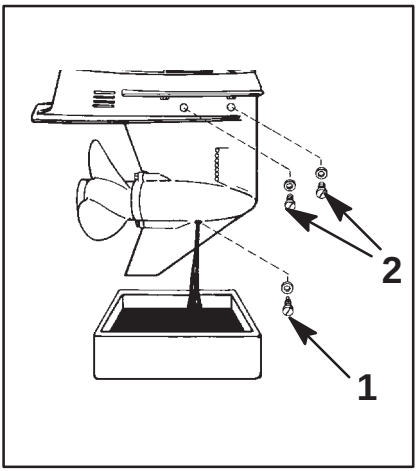

MAINTENANCE

Checking Gear Case Lubricant Level and Refilling Gear Case

Position outboard vertically.

Add Mercury Precision or Quicksilver Gear Lube until it appears at front vent hole.

Reinstall front vent plug and sealing washer.

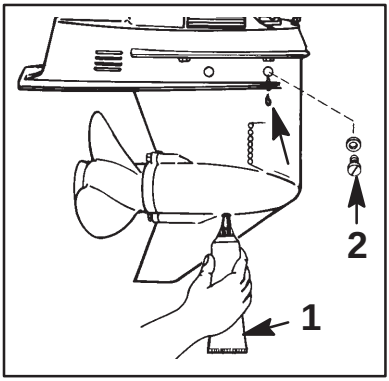

1 Mercury Precision or Quicksilver Gear Lube.

2 Front Vent Plug and sealing washer.

Continue adding lubricant until it appears at rear vent hole.

Reinstall Rear Vent Plug and sealing washer.

Reinstall cleaned Fill/Drain Plug and sealing washer.

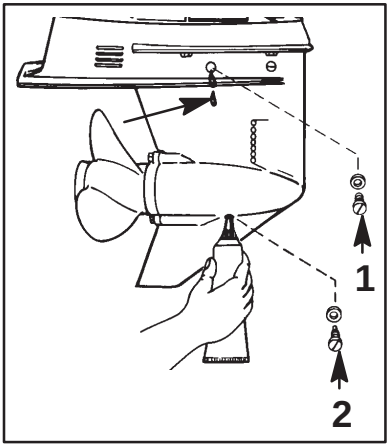

1 Rear Vent Plug and sealing washer.

2 Fill/Drain Plug and sealing washer.

MAINTENANCE

ELECTRICAL SYSTEM

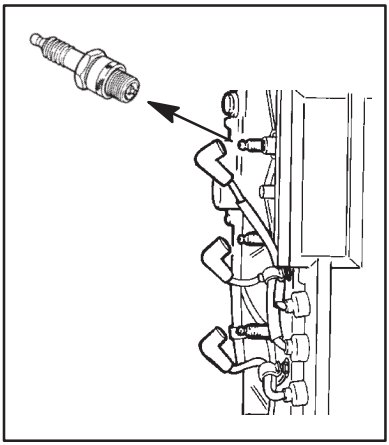

⚠WARNING

Avoid serious injury or death from fire or explosion caused by damaged spark plug boots. Damaged spark plug boots can emit sparks. Sparks can ignite fuel vapors under the engine cowl. To avoid damaging spark plug boots, do not use any sharp object or metal tool such as pliers, screwdriver, etc. to remove spark plug boots.

Remove spark plugs.

Clean or replace spark plugs.

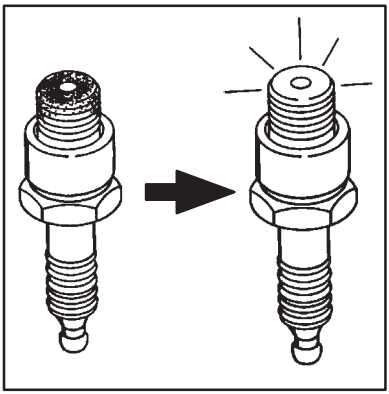

MAINTENANCE

COOLING SYSTEM

Flush the internal water passages of the outboard with fresh water after each use in salt, polluted, or muddy water.

Use a Mercury Precision or Quicksilver accessory (or equivalent) flushing attachment.

⚠WARNING

To avoid possible injury when flushing, remove the propeller. Refer to Propeller Replacement.

Set shift handle to Neutral.

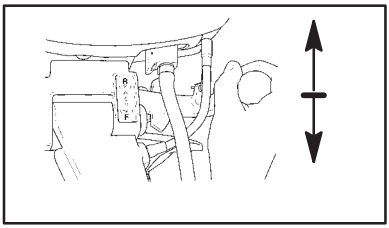

Stop engine. Remove propeller and install flushing attachment tightly over cooling water intake holes.

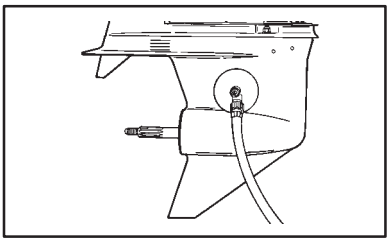

Connect water hose to flushing attachment. Adjust water flow so excess water is leaking out from around the flushing attachment.

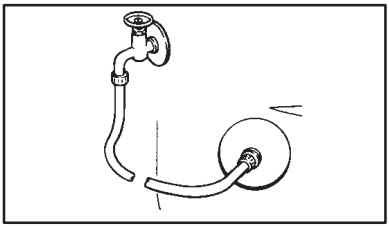

Start engine and run at idle speed for 3 to 5 minutes. Check for a steady stream of water flowing out of the water pump indicator hole.

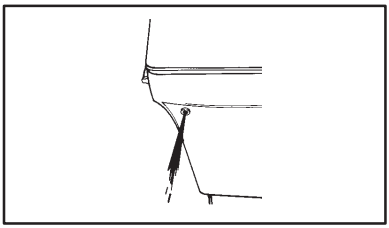

MAINTENANCE

CORROSION CONTROL ANODES

Replace corrosion control anodes if badly corroded.

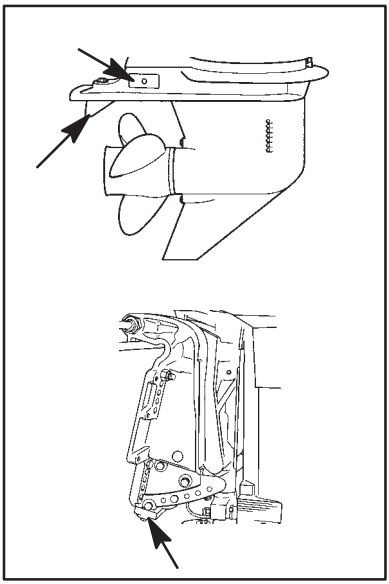

EXTERIOR CARE

Wash and wax using marine cleaners and waxes.

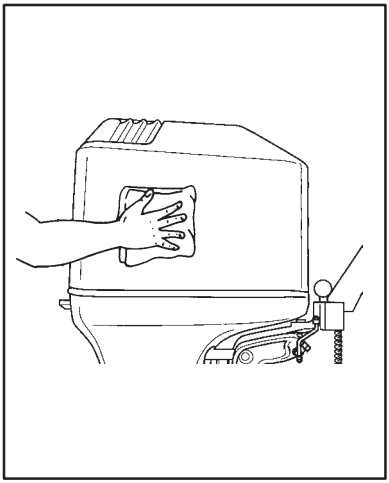

ADJUSTMENTS

CARBURETOR

Slow Speed Mixture Adjustment

Before starting engine, turn slow speed mixture screw (each carburetor) in until it's lightly seated then back out 1-1/2 turn.

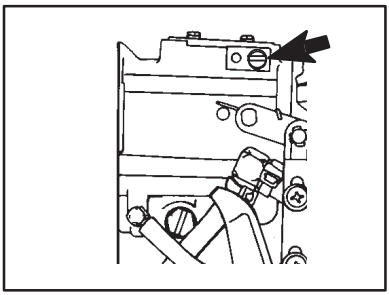

With boat tied securely to dock, start engine and run until fully warmed up.

Set shift handle to Forward.

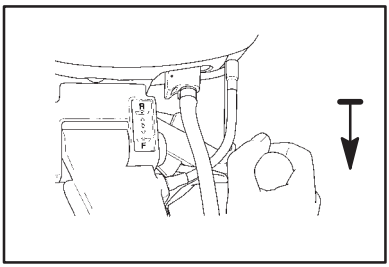

Set throttle speed to SLOW.

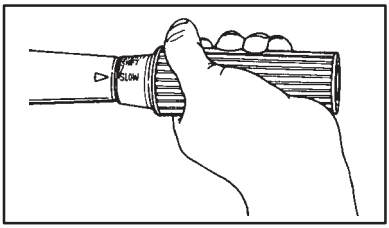

1 Turn slow speed mixture screw slowly in until the affected cylinder starts to misfire or stall due to lean mixture. Note the position of the screw slot.

2 Turn slow speed mixture screw slowly out until the affected cylinder starts to "load up" or fire unevenly due to rich mixture.

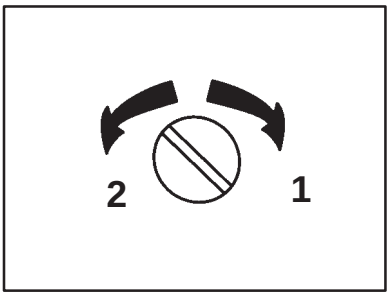

Set the slow speed mixture screw midway between the rich and lean setting.

ADJUSTMENTS

HIGH SPEED MIXTURE ADJUSTMENT

Each carburetor has a replaceable fixed high speed jet. Operating at certain elevations may require different high speed jets. See your authorized dealer.

ENGINE IDLE SPEED

With boat tied securely to dock, start engine and run until fully warmed up.

Set shift handle to Forward.

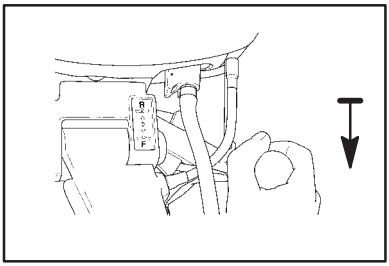

Set throttle speed to SLOW.

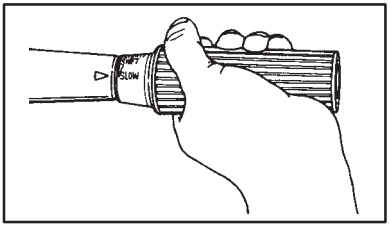

Turn screw to obtain 650-750 RPM.

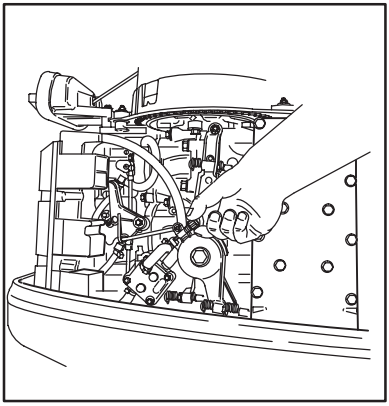

SUBMERGED OUTBOARD

Take outboard to an authorized dealer.

In An Emergency

Wash with fresh water.

Drain fuel filter, carburetors and fuel hoses.

Remove spark plugs and pull starter 2 or 3 times.

Add oil into spark plug holes and rotate flywheel several times.

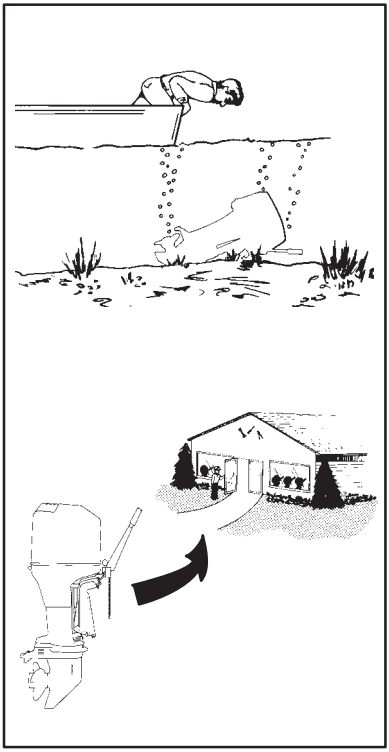

OWNER SERVICE ASSISTANCE

or6

Local Repair Service

Always return your outboard to your local authorized dealer should the need for service arise. Only he has the factory-trained mechanics, knowledge, special tools and equipment and the genuine parts and accessories to properly service your engine should the need occur. He knows your engine best.

or2

Service Away From Home

If you are away from your local dealer and the need arises for service, contact the nearest authorized dealer. Refer to the Yellow Pages of the telephone directory. If, for any reason, you cannot obtain service, contact the nearest Mercury Marine Service Office.

or7

Parts And Accessories Inquiries

All inquiries concerning genuine replacement parts and accessories should be directed to your local authorized dealer. The dealer has the necessary information to order parts and accessories for you. When inquiring on parts and accessories, the dealer requires the model and serial number to order the correct parts.

OWNER SERVICE ASSISTANCE

or4

Service Assistance

Your satisfaction with your outboard product is very important to your dealer and to us. If you ever have a problem, question or concern about your outboard product, contact your dealer or any Authorized Mercury Marine Dealership. If additional assistance is required, take these steps.

1. *Talk with the dealership's sales manager or service manager. If this has already been done, then contact the owner of the dealership.*

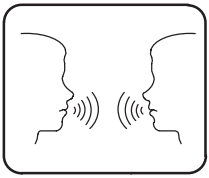

2. *Should you have a question, concern or problem that cannot be resolved by your dealership, please contact Mercury Marine Service Office for assistance. Mercury Marine will work with you and your dealership to resolve all problems.*

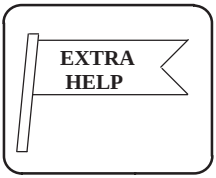

The following information will be needed by the service office:

- Your name and address
- Daytime telephone number
- Model and serial number of your outboard
- The name and address of your dealership
- Nature of problem

Mercury Marine Service Offices are listed on the next page.

OWNER SERVICE ASSISTANCE

or10

Mercury Marine Service Offices

For assistance, call, fax, or write. *Please include your daytime telephone number with mail and fax correspondence.*

Telephone	Fax	Mail
United States		
(920) 929-5040	(920) 929-5893	Mercury Marine W6250 W. Pioneer Road P.O. Box 1939 Fond du Lac, WI 54936-1939
Canada		
(905) 567-6372	(905) 567-8515	Mercury Marine Ltd. 2395 Meadowpine Blvd. Mississauga, Ontario Canada L5N 7W6
Australia, Pacific		
(61) (3) 9791-5822	(61) (3) 9793-5880	Mercury Marine Australia 132-140 Frankston Road Dandenong, Victoria 3164 Australia
Europe, Middle East, Africa		
(32) (87) 32 • 32 • 11	(32) (87) 31 • 19 • 65	Marine Power - Europe, Inc. Parc Industriel de Petit-Rechain B-4800 Verviers Belgium
Mexico, Central America, South America, Caribbean		
(305) 385-9585	(305) 385-5507	Mercury Marine - Latin America & Caribbean 9010 S.W. 137th Ave. Suite 226 Miami, FL 33186 U.S.A.
Japan		
81-53-423-2500	81-53-423-2510	Mercury Marine - Japan 283-1 Anshin-cho Hamamatsu, Shizuoka, 435-0005 Japan
Asia, Singapore		
5466160	5467789	Mercury Marine Singapore 72 Loyang Way Singapore 508762

MAINTENANCE LOG

oka1

Maintenance Log

Record here all maintenance performed on your outboard. Be sure to save all work orders and receipts.

Date	Maintenance Performed	Engine Hours

MAINTENANCE LOG

Date	Maintenance Performed	Engine Hours