Welcome Aboard!

Proper care and maintenance is an important part in keeping your Mercury Product operating at peak efficiency for maximum performance and economy. The enclosed Owner's Registration Card is your key to trouble-free family fun. Refer to your **Operation and Maintenance Manual** for full details of your warranty coverage.

Details of your nearest dealer can be found on **www.marinepower.com** where country maps and full contact information are displayed.

Is your engine properly registered for warranty purpose? Please check on www.marinepower.com. If necessary, please contact your local dealer.

Declaration of Conformity

This outboard motor's serial number plate contains in the lower corner left hand corner either the CE mark alone or the CE mark accompanied by a notified body number. This outboard motor manufactured by Mercury Marine, Fond du Lac, WI, USA or Marine Power Europe Inc. Park Industriel, de Petit-Rechain, Belgium complies with the requirements of the following directives by meeting the associated standards, as amended:

If the CE mark is accompanied by a notified body number, the following Recreational Craft Directive applies:

Recreational Craft Directive: 2003/44/EC amending 94/25/EC

Owner's manual (A.2.5)	ISO 10240
Handling characteristics (A.4)	ISO 8665
Outboard engine starting (A.5.1.4)	ISO 11547
Fuel tanks (A.5.2.2)	ISO 13591; ISO 8469
General steering system	ABYC P-17
Exhaust emission requirements (B.2)	ISO 8178
Owner's manual (B.4)	ISO 8665
Noise emission levels (C.1)	ISO 14509

The notified body responsible for surveillance of the quality system under Full Quality Assurance Module H of Directive 2003/44/EC is:

Det Norske Veritas

Norway

Notified Body Number: 0575

If the CE mark is not accompanied by a notified body number, the following Recreational Craft Directive language applies:

Recreational Craft Directive: 94/25/EC

Owner's manual (A.2.5)	ISO 10240
Handling characteristics (A.4)	ISO 8665
Outboard engine starting (A.5.1.4)	ISO 11547

© 2006 Mercury Marine

Fuel tanks (A.5.2.2)	ISO 13591; ISO 8469
General steering system	ABYC P-17

The following applies to all product covered by this manual:

Safety of Machinery Directive 98/37/EC

Principles of safety integration (1.1.2)	EN 292-1; EN 292-2; EN 1050
Noise (1.5.8)	ICOMIA 39/94
Vibration	ICOMIA 38/94

Electromagnetic Compatibility Directive 89/336/EC

Generic emission standard	EN 61000-6-3
Generic immunity standard	EN 61000-6-1
Vehicles, boats and internal combustion engine driven devices - radio disturbance characteristics	SAE J551 (CISPR 12)
Electrostatic discharge testing	EN 61000-6-2; EN 61000-4-2; EN 61000-4-3

This declaration is issued under the sole responsibility of Mercury Marine and Marine Power Europe.

Patrick C. Mackey

President, Mercury Marine, Fond du Lac, WI USA

European Regulations Contact:

Regulations and Product Safety Department, Mercury Marine,

Fond du Lac, WI USA

TABLE OF CONTENTS

Warranty Information

Transfer Of Warranty....1
Warranty Registration United States And Canada....1
Warranty Registration Outside The United States And Canada....1
FourStroke Outboard Limited Warranty United States, Canada and Europe....2
FourStroke Outboard Limited Warranty (Confederation of Independent States, Middle-East, and Africa....3
3 Year Limited Warranty Against Corrosion....5
Warranty Coverage And Exclusions....6

General Information

Boater's Responsibilities....8
Before Operating Your Outboard....8
Boat Horsepower Capacity....8
High-Speed And High-Performance Boat Operation....9
Outboard Remote Control Models....9
Remote Steering Notice....9
Outboard Mounting Notice....10
Propeller Selection....10
Lanyard Stop Switch....11
Protecting People In The Water....12
Passenger Safety Message - Pontoon Boats And Deck Boats....13
Wave And Wake Jumping....13
Impact With Underwater Hazards....14
Exhaust Emissions....15
Selecting Accessories For Your Outboard....16
Safe Boating Suggestions....16
Recording Serial Number....17
80/100/115 Specifications - International....17
Component Identification....19

Transporting

Trailering Boat/Outboard....20

Fuel and Oil

Fuel Recommendations....21
Filling Fuel Tank....22
Engine Oil Recommendations....22
Checking and Adding Engine Oil....22

Features and Controls

Remote Control Features....24
Warning System....24
Power Trim and Tilt....26

TABLE OF CONTENTS

Operation

Pre-Starting Check List....30
Operating In Freezing Temperatures....30
Operating In Salt Water Or Polluted Water....30
Setting Trim Angle while Running Engine at Idle Speed....30
Engine Break-in Procedure....31
Starting The Engine - Remote Control Models....31
Gear Shifting....33
Stopping The Engine....33

Maintenance

Outboard Care....35
EPA Emissions....35
Inspection and Maintenance Schedule....36
Flushing the Cooling System....37
Top Cowl Removal and Installation....37
Flywheel Cover Removal and Installation....38
Cleaning Care for Top and Bottom Cowls....39
Cleaning Care for the Powerhead (Saltwater Use)....39
Battery Inspection 40
Air Filter....40
Fuel System....41
Corrosion Control Anode....44
Propeller Replacement....44
Spark Plug Inspection and Replacement....47
Fuse Replacement....48
Alternator Drive Belt Inspection....49
Lubrication Points....50
Checking Power Trim Fluid....52
Changing Engine Oil 52
Gearcase Lubrication....54

Storage

Storage Preparation....56
Protecting External Outboard Components....56
Protecting Internal Engine Components....56
Gearcase....57
Positioning Outboard For Storage....57
Battery Storage....57

Troubleshooting

Starter Motor Will Not Crank the Engine....58
Engine Will Not Start....58
Engine Runs Erratically....58
Performance Loss....58
Battery Will Not Hold Charge....59

TABLE OF CONTENTS

Owner Service Assistance

Local Repair Service....60
Service Away From Home....60
Parts And Accessories Inquiries....60
Service Assistance....60
Mercury Marine Service Offices....60

Outboard Installation

Important Information....62
Boat Horsepower Capacity....62
Start in Gear Protection....62
Selecting Accessories For Your Outboard....62
Fuel Tanks....63
Filling the Fuel System....63
Installation Specifications....63
Lifting Outboard....63
Steering Cable - Starboard Side Routed Cable....64
Steering Link Rod Fasteners....65
Determining Recommended Outboard Mounting Height....67
Drilling Outboard Mounting Holes....68
Fastening the Outboard to the Transom....69
Electrical, Fuel Hose, and Control Cables....71
Trim In Pin....80

WARRANTY INFORMATION

Transfer Of Warranty

The limited warranty is transferable to a subsequent purchaser, but only for the remainder of the unused portion of the limited warranty. This will not apply to products used for commercial applications.

To transfer the warranty to the subsequent owner, send or fax a copy of the bill of sale or purchase agreement, new owner's name, address and engine serial number to Mercury Marine's warranty registration department. In the United States and Canada, mail to:

Mercury Marine
Attn: Warranty Registration Department
W6250 W. Pioneer Road
P.O. Box 1939
Fond du Lac, WI 54936-1939
920-929-5054
Fax 920-929-5893

Upon processing the transfer of warranty, Mercury Marine will send registration verification to the new owner of the product by mail.

There is no charge for this service.

For products purchased outside the United States and Canada, contact the distributor in your country, or the Marine Power Service Center closest to you.

Warranty Registration United States And Canada

1. You may change your address at any time, including at time of warranty claim, by calling Mercury Marine or sending a letter or fax with your name, old address, new address, and engine serial number to Mercury Marine's warranty registration department. Your dealer can also process this change of information.
   Mercury Marine
   Attn: Warranty Registration Department
   W6250 Pioneer Road
   P.O. Box 1939
   Fond du Lac, WI 54936-1939
   920-929-5054
   Fax 920-929-5893

NOTE: *Registration lists must be maintained by Mercury Marine and any dealer on marine products sold in the United States, should a safety recall notification under the Federal Safety Act be required.*

2. To be eligible for warranty coverage, the product must be registered with Mercury Marine. At the time of sale, the dealer should complete the warranty registration and immediately submit it to Mercury Marine via MercNET, E-mail, or mail. Upon receipt of this warranty registration, Mercury Marine will record the registration.
3. Upon processing the warranty registration, Mercury Marine will send registration verification by mail to the purchaser of the product. If this registration verification is not received within 30 days, please contact your selling dealer immediately. Warranty coverage is not effective until your product is registered with Mercury Marine.

Warranty Registration Outside The United States And Canada

1. It is important that your selling dealer fills out the Warranty Registration Card completely and mails it to the distributor or Marine Power Service Center responsible for administering the warranty registration/ claim program for your area.
2. The Warranty Registration Card identifies your name and address, product model and serial numbers, date of sale, type of use and the selling distributor's/dealer's code number, name and address. The distributor/dealer also certifies that you are the original purchaser and user of the product.
3. A copy of the Warranty Registration Card, designated as the Purchaser's Copy, MUST be given to you immediately after the card has been completely filled out by the selling distributor/dealer. This card represents your factory registration identification, and should be retained by you for future use when required. Should you ever require warranty service on this product, your dealer may ask you for the Warranty Registration Card to verify date of purchase and to use the information on the card to prepare the warranty claim forms.

4. In some countries, the Marine Power Service Center will issue you a permanent (plastic) Warranty Registration Card within 30 days after receiving the Factory Copy of the Warranty Registration Card from your distributor/dealer. If you receive a plastic Warranty Registration Card, you may discard the Purchaser's Copy that you received from the distributor/dealer when you purchased the product. Ask your distributor/dealer if this plastic card program applies to you.

IMPORTANT: Registration lists must be maintained by the factory and dealer in some countries by law. It is our desire to have ALL products registered at the factory should it ever be necessary to contact you. Make sure your dealer/distributor fills out the warranty registration card immediately and sends the factory copy to the Marine Power International Service Center for your area.

5. For further information concerning the Warranty Registration Card and its relationship to Warranty Claim processing, refer to the International Warranty.

FourStroke Outboard Limited Warranty United States, Canada and Europe

Outside the United States, Canada and Europe - check with local distributor.

WHAT IS COVERED: Mercury Marine warrants its new products to be free of defects in material and workmanship during the period described below.

DURATION OF COVERAGE: This Limited Warranty provides coverage for two (2) years from the date the product is first sold to a recreational use retail purchaser, or the date on which the product is first put into service, whichever occurs first. Commercial users of these products receive warranty coverage of one (1) year from the date of first retail sale, or one (1) year from the date in which the product was first put into service, whichever occurs first. Commercial use is defined as any work or employment related use of the product, or any use of the product which generates income, for any part of the warranty period, even if the product is only occasionally used for such purposes. The repair or replacement of parts, or the performance of service under this warranty, does not extend the life of this warranty beyond its original expiration date. Unexpired warranty coverage can be transferred from one recreational use customer to a subsequent recreational use customer upon proper re–registration of the product. Unexpired warrant coverage cannot be transferred either to or from a commercial use customer.

CONDITIONS THAT MUST BE MET IN ORDER TO OBTAIN WARRANTY COVERAGE: Warranty coverage is available only to retail customers that purchase from a Dealer authorized by Mercury Marine to distribute the product in the country in which the sale occurred, and then only after the Mercury Marine specified pre–delivery inspection process is completed and documented. Warranty coverage becomes available upon proper registration of the product by the authorized dealer. Routine maintenance outlined in the Operation and Maintenance Manual must be timely performed in order to maintain warranty coverage. Mercury Marine reserves the right to make future warranty coverage contingent on proof of proper maintenance.

WHAT MERCURY WILL DO: Mercury’s sole and exclusive obligation under this warranty is limited to, at our option, repairing a defective part, replacing such part or parts with new or Mercury Marine certified remanufactured parts, or refunding the purchase price of the Mercury product. Mercury reserves the right to improve or modify products from time to time without assuming an obligation to modify products previously manufactured.

HOW TO OBTAIN WARRANTY COVERAGE: The customer must provide Mercury with a reasonable opportunity to repair, and reasonable access to the product for warranty service. Warranty claims shall be made by delivering the product for inspection to a Mercury dealer authorized to service the product. If purchaser cannot deliver the product to such a dealer, written notice must be given to Mercury. We will then arrange for the inspection and any covered repair. Purchaser in that case shall pay for all related transportation charges and/or travel time. If the service provided is not covered by this warranty, purchaser shall pay for all related labor and material, and any other expenses associated with that service. Purchaser shall not, unless requested by Mercury, ship the product or parts of the product directly to Mercury. Proof of registered ownership must be presented to the dealer at the time warranty service is requested in order to obtain coverage.

WARRANTY INFORMATION

WHAT IS NOT COVERED: This limited warranty does not cover routine maintenance items, tune ups, adjustments, normal wear and tear, damage caused by abuse, abnormal use, use of a propeller or gear ratio that does not allow the engine to run in its recommended wide open throttle RPM range (see the Operation and Maintenance Manual), operation of the product in a manner inconsistent with the recommended operation/duty cycle section of the Operation and Maintenance Manual, neglect, accident, submersion, improper installation (proper installation specifications and techniques are set forth in the installation instructions for the product), improper service, use of an accessory or part not manufactured or sold by us, jet pump impellers and liners, operation with fuels, oils or lubricants which are not suitable for use with the product (see the Operation and Maintenance Manual), alteration or removal of parts, or water entering the engine through the fuel intake, air intake or exhaust system, or damage to the product from insufficient cooling water caused by blockage of the cooling system by a foreign body, running the engine out of water, mounting the engine too high on the transom, or running the boat with the engine trimmed out too far.. Use of the product for racing or other competitive activity, or operating with a racing type lower unit, at any point, even by a prior owner of the product, voids the warranty.

Expenses related to haul out, launch, towing, storage, telephone, rental, inconvenience, slip fees, insurance coverage, loan payments, loss of time, loss of income, or any other type of incidental or consequential damages are not covered by this warranty. Also, expenses associated with the removal and/or replacement of boat partitions or material caused by boat design for access to the product are not covered by this warranty.

No individual or entity, including Mercury Marine authorized dealers, has been given authority by Mercury Marine to make any affirmation, representation or warranty regarding the product, other than those contained in this limited warranty, and if made, shall not be enforceable against Mercury Marine.

For additional information regarding events and circumstances covered by this warranty, and those that are not, see the Warranty Coverage section of the Operation and Maintenance Manual, incorporated by reference into this warranty.

DISCLAIMERS AND LIMITATIONS:

THE IMPLIED WARRANTIES OF MERCHANTABILITY AND FITNESS FOR A PARTICULAR PURPOSE ARE EXPRESSLY DISCLAIMED. TO THE EXTENT THAT THEY CANNOT BE DISCLAIMED, THE IMPLIED WARRANTIES ARE LIMITED IN DURATION TO THE LIFE OF THE EXPRESS WARRANTY. INCIDENTAL AND CONSEQUENTIAL DAMAGES ARE EXCLUDED FROM COVERAGE UNDER THIS WARRANTY. SOME STATES/COUNTRIES DO NOT ALLOW FOR THE DISCLAIMERS, LIMITATIONS AND EXCLUSIONS IDENTIFIED ABOVE, AS A RESULT, THEY MAY NOT APPLY TO YOU. THIS WARRANTY GIVES YOU SPECIFIC LEGAL RIGHTS, AND YOU MAY ALSO HAVE OTHER LEGAL RIGHTS WHICH VARY FROM STATE TO STATE AND COUNTRY TO COUNTRY.

FourStroke Outboard Limited Warranty (Confederation of Independent States, Middle-East, and Africa

WHAT IS COVERED: Mercury Marine warrants its new Outboard and Jet Products to be free of defects in material and workmanship during the period described below.

DURATION OF COVERAGE: This Limited Warranty provides coverage for one (1) year from the date the product is first sold to a recreational use retail purchaser, or the date on which the product is first put into service, whichever occurs first. Commercial users of these products receive warranty coverage of one (1) years from the date of first retail sale, or one (1) year from the date on which the product was first put into service, whichever occurs first. Commercial use is defined as any work or employment related use of the product, or any use of the product which generates income, for any part of the warranty period, even if the product is only occasionally used for such purposes. The repair or replacement of parts, or the performance of service under this warranty, does not extend the life of this warranty beyond its original expiration date. Unexpired warranty coverage can be transferred from one recreational use customer to a subsequent recreational use customer upon proper re-registration of the product. Unexpired warranty coverage cannot be transferred either to or from a commercial use customer.

WARRANTY INFORMATION

CONDITIONS THAT MUST BE MET IN ORDER TO OBTAIN WARRANTY COVERAGE: Warranty coverage is available only to retail customers that purchase from a Dealer authorized by Mercury Marine to distribute the product in the country in which the sale occurred, and then only after the Mercury Marine specified pre–delivery inspection process is completed and documented. Warranty coverage becomes available upon proper registration of the product by the authorized dealer. Routine maintenance outlined in the Operation and Maintenance Manual must be timely performed in order to maintain warranty coverage. Mercury Marine reserves the right to make warranty coverage contingent on proof of proper maintenance.

WHAT MERCURY WILL DO: Mercury's sole and exclusive obligation under this warranty is limited to, at our option, repairing a defective part, replacing such part or parts with new or Mercury Marine certified re–manufactured parts, or refunding the purchase price of the Mercury product. Mercury reserves the right to improve or modify products from time to time without assuming an obligation to modify products previously manufactured.

HOW TO OBTAIN WARRANTY COVERAGE: The customer must provide Mercury with a reasonable opportunity to repair, and reasonable access to the product for warranty service. Warranty claims shall be made by delivering the product for inspection to a Mercury dealer authorized to service the product. If purchaser cannot deliver the product to such a dealer, written notice must be given to Mercury. We will then arrange for the inspection and any covered repair. Purchaser in that case shall pay for all related transportation charges and/or travel time. If the service provided is not covered by this warranty, purchaser shall pay for all related laborand material, and any other expenses associated with that service. Purchaser shall not, unless requested by Mercury, ship the product or parts of the product directly to Mercury. Proof of registered ownership must be presented to the dealer at the time warranty service is requested in order to obtain coverage.

WHAT IS NOT COVERED: This limited warranty does not cover routine maintenance items, tune ups, adjustments, normal wear and tear, damage caused by abuse, abnormal use, use of a propeller or gear ratio that does not allow the engine to run in its recommended wide open throttle RPM range (see the Operation and Maintenance Manual), operation of the product in a manner inconsistent with the recommended operation/duty cycle section of the Operation and Maintenance Manual, neglect, accident, submersion, improper installation (proper installation specifications and techniques are set forth in the installation instructions for the product), improper service, use of an accessory or part not manufactured or sold by us, jet pump impellers and liners, operation with fuels, oils or lubricants which are not suitable for use with the product (see the Operation and Maintenance Manual), alteration or removal of parts, or water entering the engine through the fuel intake, air intake or exhaust system, or damage to the product from insufficient cooling water caused by blockage of the cooling system by foreign body, running the engine out of water, mounting the engine too high on the transom, or running the boat with the engine trimmed out too far.

Use of the product for racing or other competitive activity, or operating with a racing type lower unit, at any point, even by a prior owner of the product, voids the warranty.

Expenses related to haul out, launch, towing, storage, telephone, rental, inconvenience, slip fees, insurance coverage, loan payments, loss of time, loss of income, or any other type of incidental or consequential damages are not coveredby this warranty. Also, expenses associated with the removal and/or replacement of boat partitions or material caused by boat design for access to the product are not covered by this warranty.

No individual or entity, including Mercury Marine authorized dealers, has been given authority by Mercury Marine to make any affirmation, representation or warranty regarding the product, other than those contained in this limited warranty, and if made, shall not be enforceable against Mercury Marine.

For additional information regarding events and circumstances covered by this warranty, and those that are not, see the Warranty Coverage section of the Operation and Maintenance Manual, incorporated by reference into this warranty.

WARRANTY INFORMATION

DISCLAIMERS AND LIMITATIONS:
THE IMPLIED WARRANTIES OF MERCHANTABILITY AND FITNESS FOR A PARTICULAR PURPOSE ARE EXPRESSLY DISCLAIMED. TO THE EXTENT THAT THEY CANNOT BE DISCLAIMED, THE IMPLIED WARRANTIES ARE LIMITED IN DURATION TO THE LIFE OF THE EXPRESS WARRANTY. INCIDENTAL AND CONSEQUENTIAL DAMAGES ARE EXCLUDED FROM COVERAGE UNDER THIS WARRANTY. SOME STATES/COUNTRIES DO NOT ALLOW FOR THE DISCLAIMERS, LIMITATIONS AND EXCLUSIONS IDENTIFIED ABOVE, AS A RESULT, THEY MAY NOT APPLY TO YOU. THIS WARRANTY GIVES YOU SPECIFIC LEGAL RIGHTS, AND YOU MAY ALSO HAVE OTHER LEGAL RIGHTS WHICH VARY FROM STATE TO STATE AND COUNTRY TO COUNTRY.

3 Year Limited Warranty Against Corrosion

WHAT IS COVERED: Mercury Marine warrants that each new Mercury, Mariner, Mercury Racing, Sport Jet, M^2 Jet Drive, Tracker by Mercury Marine Outboard, Mercury MerCruiser Inboard or Sterndrive Engine (Product) will not be rendered inoperative as a direct result of corrosion for the period of time described below.

DURATION OF COVERAGE: This limited corrosion warranty provides coverage for three (3) years from either the date the product is first sold, or the date on which the product is first put into service, whichever occurs first. The repair or replacement of parts, or the performance of service under this warranty does not extend the life of this warranty beyond its original expiration date. Unexpired warranty coverage can be transferred to subsequent (non-commercial use) purchaser upon proper re-registration of the product.

CONDITIONS THAT MUST BE MET IN ORDER TO OBTAIN WARRANTY COVERAGE: Warranty coverage is available only to retail customers that purchase from a Dealer authorized by Mercury Marine to distribute the product in the country in which the sale occurred, and then only after the Mercury Marine specified pre-delivery inspection process is completed and documented. Warranty coverage becomes available upon proper registration of the product by the authorized dealer. Corrosion prevention devices specified in the Operation and Maintenance Manual must be in use on the boat, and routine maintenance outlined in the Operation and Maintenance Manual must be timely performed (including without limitation the replacement of sacrificial anodes, use of specified lubricants, and touch-up of nicks and scratches) in order to maintain warranty coverage. Mercury Marine reserves the right to make warranty coverage contingent upon proof of proper maintenance.

WHAT MERCURY WILL DO: Mercury's sole and exclusive obligation under this warranty is limited to, at our option, repairing a corroded part, replacing such part or parts with new or Mercury Marine certified re-manufactured parts, or refunding the purchase price of the Mercury product. Mercury reserves the right to improve or modify products from time to time without assuming an obligation to modify products previously manufactured.

HOW TO OBTAIN WARRANTY COVERAGE: The customer must provide Mercury with a reasonable opportunity to repair, and reasonable access to the product for warranty service. Warranty claims shall be made by delivering the product for inspection to a Mercury dealer authorized to service the product. If purchaser cannot deliver the product to such a dealer, written notice must be given to Mercury. We will then arrange for the inspection and any covered repair. Purchaser in that case shall pay for all related transportation charges and/or travel time. If the service provided is not covered by this warranty, purchaser shall pay for all related labor and material, and any other expenses associated with that service. Purchaser shall not, unless requested by Mercury, ship the product or parts of the product directly to Mercury. Proof of registered ownership must be presented to the dealer at the time warranty service is requested in order to obtain coverage.

WHAT IS NOT COVERED: This limited warranty does not cover electrical system corrosion; corrosion resulting from damage, corrosion which causes purely cosmetic damage, abuse or improper service; corrosion to accessories, instruments, steering systems; corrosion to factory installed jet drive unit; damage due to marine growth; product sold with less than a one year limited Product warranty; replacement parts (parts purchased by customer); products used in a commercial application. Commercial use is defined as any work or employment related use of the product, or any use of the product which generates income, for any part of the warranty period, even if the product is only occasionally used for such purposes.

WARRANTY INFORMATION

Corrosion damage caused by stray electrical currents (on-shore power connections, nearby boats, submerged metal) is not covered by this corrosion warranty and should be protected against by the use of a corrosion protection system, such as the Mercury Precision Parts or Quicksilver MerCathode system and/or Galvanic Isolator. Corrosion damage caused by improper application of copper base anti-fouling paints is also not covered by this limited warranty. If anti-fouling protection is required, Tri-Butyl-Tin-Adipate (TBTA) base anti-fouling paints are recommended on Outboard and MerCruiser boating applications. In areas where TBTA base paints are prohibited by law, copper base paints can be used on the hull and transom. Do not apply paint to the outboard or MerCruiser product. In addition, care must be taken to avoid an electrical interconnection between the warranted product and the paint. For MerCruiser product, an unpainted gap of at least 38 mm (1.5 in.) should be left around the transom assembly. Refer to the Operation and Maintenance Manual for additional details.

For additional information regarding events and circumstances covered by this warranty, and those that are not, see the Warranty Coverage section of the Operation and Maintenance Manual, incorporated by reference into this warranty.

DISCLAIMERS AND LIMITATIONS:

THE IMPLIED WARRANTIES OF MERCHANTABILITY AND FITNESS FOR A PARTICULAR PURPOSE ARE EXPRESSLY DISCLAIMED. TO THE EXTENT THAT THEY CANNOT BE DISCLAIMED, THE IMPLIED WARRANTIES ARE LIMITED IN DURATION TO THE LIFE OF THE EXPRESS WARRANTY. INCIDENTAL AND CONSEQUENTIAL DAMAGES ARE EXCLUDED FROM COVERAGE UNDER THIS WARRANTY. SOME STATES/COUNTRIES DO NOT ALLOW FOR THE DISCLAIMERS, LIMITATIONS AND EXCLUSIONS IDENTIFIED ABOVE, AS A RESULT, THEY MAY NOT APPLY TO YOU. THIS WARRANTY GIVES YOU SPECIFIC LEGAL RIGHTS, AND YOU MAY ALSO HAVE OTHER LEGAL RIGHTS WHICH VARY FROM STATE TO STATE AND COUNTRY TO COUNTRY.

Warranty Coverage And Exclusions

The purpose of this section is to help eliminate some of the more common misunderstandings regarding warranty coverage. The following information explains some of the types of services that are not covered by warranty. The provisions set forth following have been incorporated by reference into the Three Year Limited Warranty Against Corrosion Failure, the International Limited Outboard Warranty, and the United States and Canada Limited Outboard Warranty.

Keep in mind that warranty covers repairs that are needed within the warranty period because of defects in material and workmanship. Installation errors, accidents, normal wear, and a variety of other causes that affect the product are not covered.

Warranty is limited to defects in material or workmanship, but only when the consumer sale is made in the country to which distribution is authorized by us.

Should you have any questions concerning warranty coverage, contact your authorized dealer. They will be pleased to answer any questions that you may have.

GENERAL EXCLUSIONS FROM WARRANTY

1. Minor adjustments and tune-ups, including checking, cleaning or adjusting spark plugs, ignition components, carburetor settings, filters, belts, controls, and checking lubrication made in connection with normal services.
2. Factory installed jet drive units - Specific parts excluded from the warranty are: The jet drive impeller and jet drive liner damaged by impact or wear, and water damaged drive shaft bearings as a result of improper maintenance.
3. Damage caused by neglect, lack of maintenance, accident, abnormal operation or improper installation or service.
4. Haul out, launch, towing charges, removal and/or replacement of boat partitions or material because of boat design for necessary access to the product, all related transportation charges and/or travel time, etc. Reasonable access must be provided to the product for warranty service. Customer must deliver product to an authorized dealer.

5. Additional service work requested by customer other than that necessary to satisfy the warranty obligation.
6. Labor performed by other than an authorized dealer may be covered only under following circumstances: When performed on emergency basis (providing there are no authorized dealers in the area who can perform the work required or have no facilities to haul out, etc., and prior factory approval has been given to have the work performed at this facility).
7. All incidental and/or consequential damages (storage charges, telephone or rental charges of any type, inconvenience or loss of time or income) are the owner's responsibility.
8. Use of other than Mercury Precision or Quicksilver parts when making warranty repairs.
9. Oils, lubricants or fluids changed as a matter of normal maintenance is customer's responsibility unless loss or contamination of same is caused by product failure that would be eligible for warranty consideration.
10. Participating in or preparing for racing or other competitive activity or operating with a racing type lower unit.
11. Engine noise does not necessarily indicate a serious engine problem. If diagnosis indicates a serious internal engine condition which could result in a failure, condition responsible for noise should be corrected under the warranty.
12. Lower unit and/or propeller damage caused by striking a submerged object is considered a marine hazard.
13. Water entering engine through the fuel intake, air intake or exhaust system or submersion.
14. Failure of any parts caused by lack of cooling water, which results from starting motor out of water, foreign material blocking inlet holes, motor being mounted too high or trimmed too far out.
15. Use of fuels and lubricants which are not suitable for use with or on the product. Refer to the Maintenance section.
16. Our limited warranty does not apply to any damage to our products caused by the installation or use of parts and accessories which are not manufactured or sold by us. Failures which are not related to the use of those parts or accessories are covered under warranty if they otherwise meet the terms of the limited warranty for that product.

GENERAL INFORMATION

Boater's Responsibilities

The operator (driver) is responsible for the correct and safe operation of the boat and safety of its occupants and general public. It is strongly recommended that each operator (driver) read and understand this entire manual before operating the outboard.

Be sure at least one additional person on board is instructed in the basics of starting and operating the outboard and boat handling in case the driver is unable to operate the boat.

Before Operating Your Outboard

Read this manual carefully. Learn how to operate your outboard properly. If you have any questions, contact your dealer.

Safety and operating information that is practiced, along with using good common sense, can help prevent personal injury and product damage.

This manual as well as safety labels posted on the outboard use the following safety alerts to draw your attention to special safety instructions that should be followed.

⚠ DANGER

DANGER—indicates an imminently hazardous situation that, if not avoided, will result in death or serious injury.

⚠ WARNING

WARNING—indicates a potentially hazardous situation that, if not avoided, could result in death or serious injury.

⚠ CAUTION

CAUTION—indicates a potentially hazardous situation that, if not avoided, may result in minor or moderate injury or property damage. It may also be used to alert against unsafe practices.

Boat Horsepower Capacity

⚠ WARNING

Using an outboard that exceeds the maximum horsepower limit of a boat can: 1) cause loss of boat control 2) place too much weight at the transom altering the designed flotation characteristics of the boat or 3) cause the boat to break apart particularly around the transom area. Overpowering a boat can result in serious injury, death or boat damage.

Do not overpower or overload your boat. Most boats will carry a required capacity plate indicating the maximum acceptable power and load as determined by the manufacturer following certain federal guidelines. If in doubt, contact your dealer or the boat manufacturer.

GENERAL INFORMATION

U.S. COAST GUARD CAPACITY	
MAXIMUM HORSEPOWER	XXX
MAXIMUM PERSON CAPACITY (POUNDS)	XXX
MAXIMUM WEIGHT CAPACITY	XXX

ob00306

High-Speed And High-Performance Boat Operation

If your outboard is to be used on a high speed or high performance boat with which you are unfamiliar, we recommend that you never operate it at its high speed capability without first requesting an initial orientation and familiarization demonstration ride with your dealer or an operator experienced with your boat/outboard combination. For additional information, obtain a copy of our **Hi-Performance Boat Operation** booklet from your dealer, distributor, or Mercury Marine.

ob00307

Outboard Remote Control Models

The remote control connected to your outboard must be equipped with a start in neutral only protection device. This prevents the engine from starting when the shift is actuated in any position other than neutral.

⚠ WARNING

Avoid serious injury or death from a sudden unexpected acceleration when starting your engine. The design of this outboard requires that the remote control used with it must have a built in start in neutral only protection device.

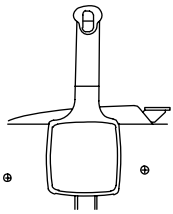

ob00308

Remote Steering Notice

The steering link rod that connects the steering cable to the engine must be fastened utilizing self-locking nuts. These self-locking nuts must never be replaced with common nuts (non-locking) as they will work loose and vibrate off, freeing the link rod to disengage.

⚠ WARNING

Disengagement of a steering link rod can result in the boat taking a full, sudden, sharp turn. This potentially violent action can cause occupants to be thrown overboard exposing them to serious injury or death.

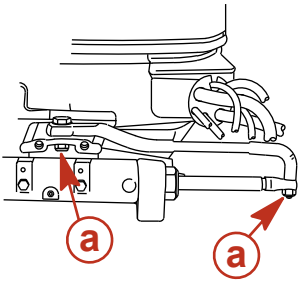

ob00655

a - Self-locking nuts

Outboard Mounting Notice

⚠ WARNING

Before operation, the outboard must be correctly installed with the required mounting hardware as shown. Failure to correctly fasten outboard could result in outboard ejecting off boat transom causing serious injury, death, or property damage.

We strongly recommend that your dealer install your outboard and related accessories to ensure proper installation and good performance. If you install the outboard yourself, refer to the **Outboard Installation** section.

The outboard must be secured to the transom with the four 12.7 mm (1/2 in.) diameter mounting bolts and locknuts provided. Install two bolts through the upper set of holes and two bolts through the lower set of holes.

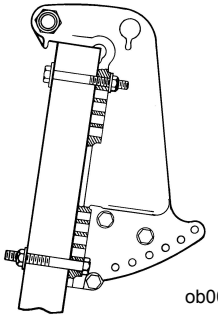

ob00658

Propeller Selection

For best all around performance from your outboard/boat combination, select a propeller that allows the engine to operate in the upper half of the recommended full throttle RPM range with the boat normally loaded (refer to **General Information - Specifications**). This RPM range allows for better acceleration while maintaining maximum boat speed.

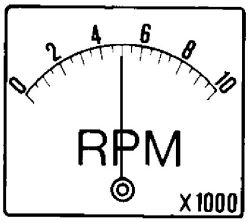

22551

If changing conditions cause the RPM to drop below the recommended range, such as warmer, more humid weather, operation at higher elevations, increased boat load, or a dirty boat bottom/gearcase, a propeller change or cleaning may be required to maintain performance and ensure the outboards durability.

Check full-throttle RPM, using an accurate tachometer, with the engine trimmed out to a balanced-steering condition (steering effort equal in both directions) without causing the propeller to break loose.

Lanyard Stop Switch

The purpose of a lanyard stop switch is to turn off the engine when the operator moves far enough away from the operator's position (as in accidental ejection from the operator's position) to activate the switch. Tiller handle outboards and some remote control units are equipped with a lanyard stop switch. A lanyard stop switch can be installed as an accessory - generally on the dashboard or side adjacent to the operator's position.

The lanyard is a cord usually between 122 and 152 cm (4 and 5 feet) in length when stretched out, with an element on one end made to be inserted into the switch and a snap on the other end for attaching to the operator. The lanyard is coiled to make its at-rest condition as short as possible to minimize the likelihood of lanyard entanglement with nearby objects. Its stretched-out length is made to minimize the likelihood of accidental activation should the operator choose to move around in an area close to the normal operator's position. If it is desired to have a shorter lanyard, wrap the lanyard around the operator's wrist or leg, or tie a knot in the lanyard.

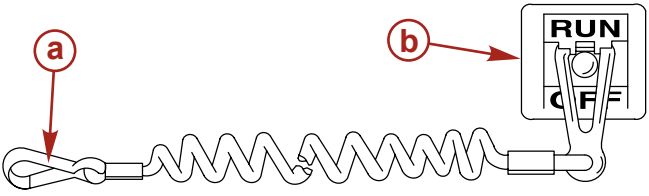

21629

a - Lanyard cord **b -** Lanyard stop switch

Read the following Safety Information before proceeding.

Important Safety Information: The purpose of a lanyard stop switch is to stop the engine when the operator moves far enough away from the operator's position to activate the switch. This would occur if the operator accidentally falls overboard or moves within the boat a sufficient distance from the operator's position. Falling overboard and accidental ejections are more likely to occur in certain types of boats such as low sided inflatables, bass boats, high performance boats, and light, sensitive handling fishing boats operated by a hand tiller. Falling overboard and accidental ejections are also likely to occur as a result of poor operating practices such as sitting on the back of the seat or gunwale at planing speeds, standing at planing speeds, sitting on elevated fishing boat decks, operating at planing speeds in shallow or obstacle infested waters, releasing your grip on a steering wheel or tiller handle that is pulling in one direction, drinking alcohol or consuming drugs, or daring high speed boat maneuvers.

While activation of the lanyard stop switch will stop the engine immediately, a boat will continue to coast for some distance depending upon the velocity and degree of any turn at shut down. However, the boat will not complete a full circle. While the boat is coasting, it can cause injury to anyone in the boat's path as seriously as the boat would when under power.

GENERAL INFORMATION

We strongly recommend that other occupants be instructed on proper starting and operating procedures should they be required to operate the engine in an emergency (e.g. if the operator is accidentally ejected).

⚠ WARNING

Should the operator fall out of the boat, the possibility of serious injury or death from being run over by the boat can be greatly reduced by stopping the engine immediately. Always properly connect both ends of the stop switch lanyard to the stop switch and the operator.

⚠ WARNING

Avoid serious injury or death from deceleration forces resulting from accidental or unintended stop switch activation. The boat operator should never leave the operator's station without first disconnecting the stop switch lanyard from the operator.

Accidental or unintended activation of the switch during normal operation is also a possibility. This could cause any, or all, of the following potentially hazardous situations:

- Occupants could be thrown forward due to unexpected loss of forward motion - a particular concern for passengers in the front of the boat who could be ejected over the bow and possibly struck by the gearcase or propeller.
- Loss of power and directional control in heavy seas, strong current or high winds.
- Loss of control when docking.

Protecting People In The Water

WHILE YOU ARE CRUISING

It is very difficult for a person standing or floating in the water to take quick action to avoid a boat heading in his/her direction, even at slow speed.

Always slow down and exercise extreme caution any time you are boating in an area where there might be people in the water.

Whenever a boat is moving (coasting) and the outboard gear shift is in neutral position, there is sufficient force by the water on the propeller to cause the propeller to rotate. This neutral propeller rotation can cause serious injury.

WHILE BOAT IS STATIONARY

⚠ WARNING

Stop your engine immediately whenever anyone in the water is near your boat. Serious injury to the person in the water is likely if contacted by a rotating propeller, a moving boat, a moving gearcase, or any solid device rigidly attached to a moving boat or gearcase.

Shift outboard into neutral and shut off the engine before allowing people to swim or be in the water near your boat.

GENERAL INFORMATION

Passenger Safety Message - Pontoon Boats And Deck Boats

Whenever the boat is in motion, observe the location of all passengers. Do not allow any passengers to stand or use seats other than those designated for traveling faster than idle speed. A sudden reduction in boat speed, such as plunging into a large wave or wake, a sudden throttle reduction, or a sharp change of boat direction, could throw them over the front of the boat. Falling over the front of the boat between the two pontoons will position them to be run over by the outboard.

BOATS HAVING AN OPEN FRONT DECK

No one should ever be on the deck in front of the fence while the boat is in motion. Keep all passengers behind the front fence or enclosure.

Persons on the front deck could easily be thrown overboard or persons dangling their feet over the front edge could get their legs caught by a wave and pulled into the water.

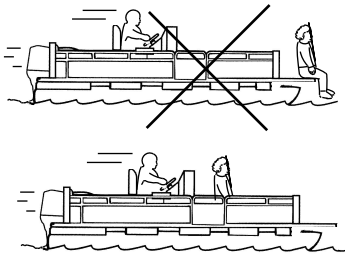

ob00312

⚠ WARNING

Avoid serious injury or death from falling over the front end of a pontoon or deck boat and being run over. Stay back from the front end of the deck and remain seated while the boat is in motion.

BOATS WITH FRONT MOUNTED, RAISED PEDESTAL FISHING SEATS

Elevated fishing seats are not intended for use when the boat is traveling faster than idle or trolling speed. Sit only in seats designated for traveling at faster speeds.

Any unexpected, sudden reduction in boat speed could result in the elevated passenger falling over the front of the boat.

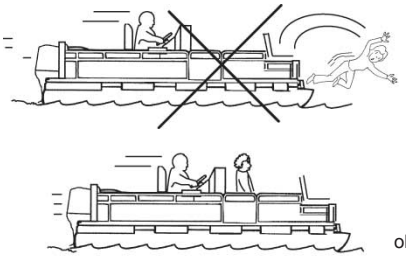

ob00313

Wave And Wake Jumping

Operating recreational boats over waves and wake is a natural part of boating. However, when this activity is done with sufficient speed to force the boat hull partially or completely out of the water, certain hazards arise, particularly when the boat re-enters the water.

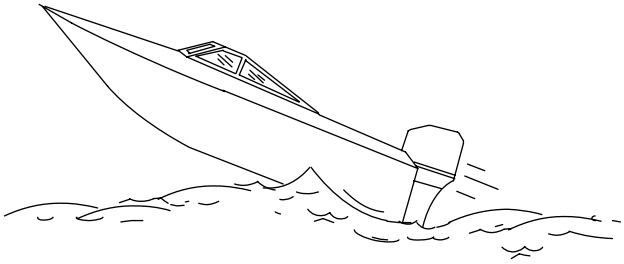

ob00314

The primary concern is the boat changing direction while in the midst of the jump. In such case the landing may cause the boat to veer violently in a new direction. Such a sharp change in direction can cause occupants to be thrown out of their seats, or out of the boat.

⚠ WARNING

Avoid serious injury or death from being thrown within or out of a boat when it lands after jumping a wave or wake. Avoid wave or wake jumping whenever possible. Instruct all occupants that if a wake or wave jump occurs, get low and hang on to a boat hand hold.

There is another less common hazardous result from allowing your boat to launch off a wave or wake. If the bow of your boat pitches down far enough while airborne, upon water contact it may penetrate under the water surface and submarine for an instant. This will bring the boat to a nearly instantaneous stop and can send the occupants flying forward. The boat may also steer sharply to one side.

Impact With Underwater Hazards

Reduce speed and proceed with caution whenever you drive a boat in shallow water areas, or in areas where you suspect underwater obstacles may exist which could be struck by the outboard or the boat bottom. **The most important thing you can do to help reduce injury or impact damage from striking a floating or underwater object is to control the boat speed. Under these conditions, boat speed should be kept to a minimum planing speed of 24 to 40 km/h (15 to 25 MPH).**

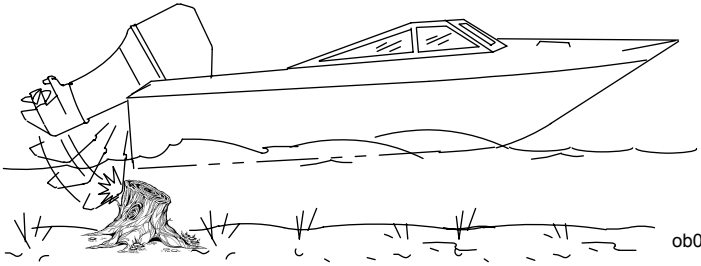

ob00315

⚠ WARNING

To avoid serious injury or death from all or part of an outboard coming into the boat after striking a floating or underwater obstacle maintain a top speed no greater than minimum planing speed.

Striking a floating or underwater object could result in an infinite number of situations. Some of these situations could result in the following:

- Part of the outboard or the entire outboard could break loose and fly into the boat.

- The boat could move suddenly in a new direction. Such a sharp change in direction can cause occupants to be thrown out of their seats or out of the boat.
- A rapid reduction in speed. This will cause occupants to be thrown forward, or even out of the boat.
- Impact damage to the outboard and/or boat.

Keep in mind, the most important thing you can do to help reduce injury or impact damage during an impact is control the boat speed. Boat speed should be kept to a minimum planing speed when driving in waters known to have underwater obstacles.

After striking a submerged object, stop the engine as soon as possible and inspect it for any broken or loose parts. If damage is present or suspected, the outboard should be taken to an authorized dealer for a thorough inspection and necessary repair.

The boat should also be checked for any hull fractures, transom fractures, or water leaks.

Operating a damaged outboard could cause additional damage to other parts of the outboard, or could affect control of the boat. If continued running is necessary, do so at greatly reduced speeds.

⚠ WARNING

Avoid serious injury or death from loss of boat control. Continued boating with major impact damage can result in sudden outboard component failure with or without subsequent impacts. Have the outboard thoroughly inspected and any necessary repairs made.

Exhaust Emissions

BE ALERT TO CARBON MONOXIDE POISONING

Carbon monoxide is present in the exhaust fumes of all internal combustion engines. This includes the outboards, sterndrives and inboard engines that propel boats, as well as the generators that power various boat accessories. Carbon monoxide is a deadly gas that is odorless, colorless and tasteless.

Early symptoms of carbon monoxide poisoning which should not be confused with seasickness or intoxication, include headache, dizziness, drowsiness, and nausea.

⚠ WARNING

Avoid the combination of a running engine and poor ventilation. Prolonged exposure to carbon monoxide in sufficient concentration can lead to unconsciousness, brain damage, or death.

GOOD VENTILATION

Ventilate passenger area, open side curtains, or forward hatches to remove fumes.

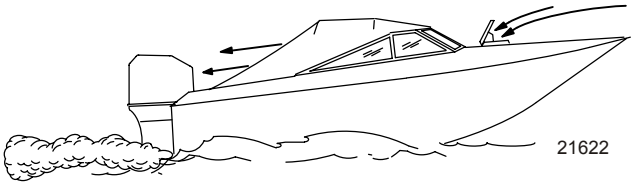

Example of desired air flow through the boat

POOR VENTILATION

Under certain running and/or wind conditions, permanently enclosed or canvas enclosed cabins or cockpits with insufficient ventilation may draw in carbon monoxide. Install one or more carbon monoxide detectors in your boat.

Although the occurrence is rare, on a very calm day, swimmers and passengers in an enclosed area of a stationary boat that contains or is near a running engine may be exposed to a hazardous level of carbon monoxide.

GENERAL INFORMATION

WHILE BOAT IS STATIONARY

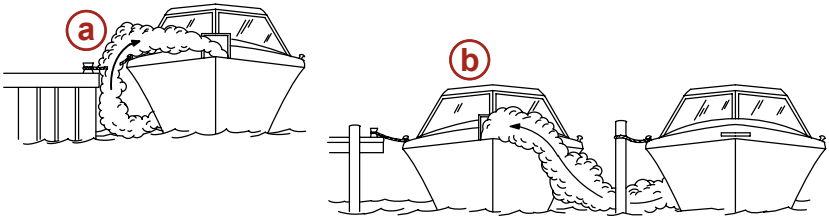

21626

a - Running the engine when the boat is moored in a confined space

b - Mooring close to another boat that has its engine running

WHILE BOAT IS MOVING

21628

a - Running the boat with the trim angle of the bow too high

b - Running the boat with no forward hatches open

Selecting Accessories For Your Outboard

Genuine Mercury Precision or Quicksilver Accessories have been specifically designed and tested for your outboard. These accessories are available from Mercury Marine dealers.

⚠ WARNING

Check with your dealer before installing accessories. The misuse of approved accessories or the use of non-approved accessories can result in product failure, serious injury, or death.

Some accessories not manufactured or sold by Mercury Marine are not designed to be safely used with your outboard or outboard operating system. Acquire and read the installation, operation, and maintenance manuals for all your selected accessories.

Safe Boating Suggestions

In order to safely enjoy the waterways, familiarize yourself with local and other governmental boating regulations and restrictions, and consider the following suggestions.

Use flotation devices. Have an approved personal flotation device of suitable size for each person aboard (it is the law) and have it readily accessible.

Do not overload your boat. Most boats are rated and certified for maximum load (weight) capacities (refer to your boat capacity plate). If in doubt, contact your dealer or the boats manufacturer.

Perform safety checks and required maintenance. Follow a regular schedule and ensure that all repairs are properly made.

GENERAL INFORMATION

Know and obey all nautical rules and laws of the waterways. Boat operators should complete a boating safety course. Courses are offered in the U.S.A. by 1) The U.S. Coast Guard Auxiliary, 2) The Power Squadron, 3) The Red Cross and 4) your state boating law enforcement agency. Inquiries may be made to the Boating Hotline, 1-800-368-5647 or the Boat U.S. Foundation information number 1-800-336-BOAT.

Make sure everyone in the boat is properly seated. Do not allow anyone to sit or ride on any part of the boat that was not intended for such use. This includes the back of seats, gunwales, transom, bow, decks, raised fishing seats, any rotating fishing seat; or anywhere that an unexpected acceleration, sudden stopping, unexpected loss of boat control, or sudden boat movement could cause a person to be thrown overboard or into the boat.

Never be under the influence of alcohol or drugs while boating (it is the law). Alcohol or drug use impairs your judgment and greatly reduces your ability to react quickly.

Prepare other boat operators. Instruct at least one other person on board in the basics of starting and operating the outboard, and boat handling, in case the driver becomes disabled or falls overboard.

Passenger boarding. Stop the engine whenever passengers are boarding, unloading, or are near the back (stern) of the boat. Just shifting the outboard into neutral is not sufficient.

Be alert. The operator of the boat is responsible by law to maintain a proper lookout by sight and hearing. The operator must have an unobstructed view particularly to the front. No passengers, load, or fishing seats should block the operators view when operating the boat above idle speed.

Never drive your boat directly behind a water skier in case the skier falls. As an example, your boat traveling at 40 km/h (25 MPH) will overtake a fallen skier 61 m (200 ft.) in front of you in 5 seconds.

Watch fallen skiers. When using your boat for water skiing or similar activities, always keep a fallen or down skier on the operator's side of the boat while returning to assist the skier. The operator should always have the down skier in sight and never back up to the skier or anyone in the water.

Report accidents. Boat operators are required by law to file a Boating Accident Report with their state boating law enforcement agency when their boat is involved in certain boating accidents. A boating accident must be reported if 1) there is loss of life or probable loss of life, 2) there is personal injury requiring medical treatment beyond first aid, 3) there is damage to boats or other property where the damage value exceeds $500.00 or 4) there is complete loss of the boat. Seek further assistance from local law enforcement.

Recording Serial Number

It is important to record this number for future reference. The serial number is located on the outboard as shown.

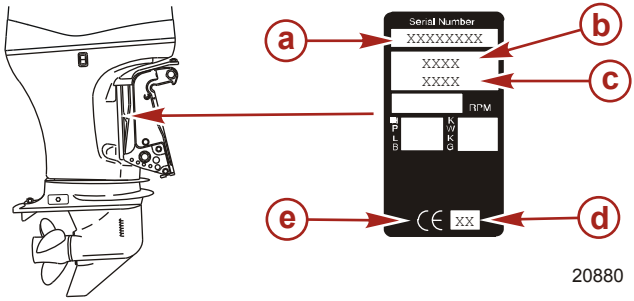

a - Serial number
b - Model year
c - Model designation
d - Year manufactured
e - Certified Europe Insignia (as applicable)

80/100/115 Specifications - International

Models	80/100/115
Horsepower	80/100/115

GENERAL INFORMATION

Models	80/100/115
Kilowatts	60/75/86
Full Throttle RPM Range	80/100 HP - 5000-6000 115HP - 5800-6400
Idle Speed in Neutral Gear[1.]	700 RPM
Number of Cylinders	4
Piston Displacement	1,731 cc (105.6 cid)
Cylinder Bore	82 mm (3.23 in.)
Stroke	82 mm (3.23 in.)
Recommended Spark Plug	NGK LFR4A-E
Spark Plug Gap	0.8 mm (0.032 in.)
Spark Plug Hex Size	16 mm
Gear Ratio	80/100 HP - 2.33:1 115 HP - 2.07:1
Recommended Gasoline	Refer to **Fuel & Oil**
Recommended Oil	Refer to **Fuel & Oil**
Gearcase Lubricant Capacity	710 ml (24 fl. oz.)
Engine Oil Capacity With Oil Filter Replacement	5.0 liters (5.3 qt.)
Battery Rating	1000 Marine Cranking Amps (MCA), 800 Cold Cranking AMPS (CCA) or 180 Ampere Hour (Ah)
Sound at Drivers Ear (ICOMIA 39-94)	82.9

1. With engine fully warmed up.

Component Identification

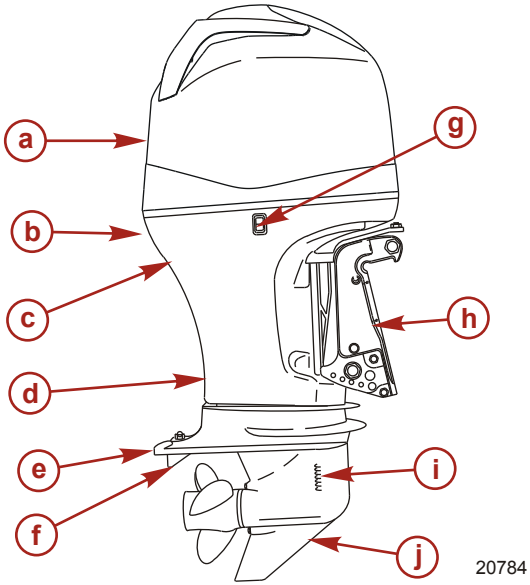

a - Top cowl
b - Bottom cowl
c - Water pump indicator hole
d - Driveshaft housing
e - Anti-ventilation plate
f - Trim tab
g - Auxiliary tilt switch
h - Transom brackets
i - Cooling water intake holes
j - Gearcase

TRANSPORTING

Trailering Boat/Outboard

Trailer your boat with the outboard tilted down in a vertical operating position.

If additional ground clearance is required, the outboard should be tilted up using an accessory outboard support device. Refer to your local dealer for recommendations. Additional clearance may be required for railroad crossings, driveways, and trailer bouncing.

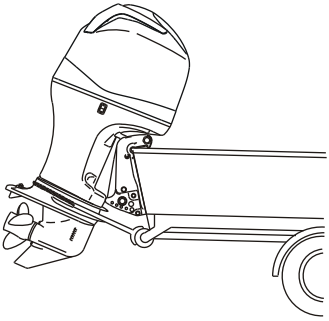

20759

IMPORTANT: Do not rely on the power trim/tilt system or tilt support lever to maintain proper ground clearance for trailering. The outboard tilt support lever is not intended to support the outboard for trailering.

Shift the outboard to forward gear. This prevents the propeller from spinning freely.

FUEL AND OIL

Fuel Recommendations

IMPORTANT: Use of improper gasoline can damage your engine. Engine damage resulting from the use of improper gasoline is considered misuse of the engine, and damage caused thereby will not be covered under the limited warranty.

FUEL RATINGS

Mercury Marine engines will operate satisfactorily when using a major brand of unleaded gasoline meeting the following specifications:

USA and Canada - having a posted pump Octane Rating of 87 (R+M)/2 minimum. Premium gasoline [92 (R+M)/2 Octane] is also acceptable. Do NOT use leaded gasoline.

Outside USA and Canada - having a posted pump Octane Rating of 90 RON minimum. Premium gasoline (98 RON) is also acceptable. If unleaded gasoline is not available, use a major brand of leaded gasoline.

USING REFORMULATED (OXYGENATED) GASOLINES (USA ONLY)

This type of gasoline is required in certain areas of the USA. The 2 types of oxygenates used in these fuels are Alcohol (Ethanol) or Ether (MTBE or ETBE). If Ethanol is the oxygenate that is used in the gasoline in your area, refer to Gasolines Containing Alcohol.

These Reformulated Gasolines are acceptable for use in your Mercury Marine engine.

GASOLINES CONTAINING ALCOHOL

If the gasoline in your area contains either methanol (methyl alcohol) or ethanol (ethyl alcohol), you should be aware of certain adverse effects that can occur. These adverse effects are more severe with methanol. Increasing the percentage of alcohol in the fuel can also worsen these adverse effects.

Some of these adverse effects are caused because the alcohol in the gasoline can absorb moisture from the air, resulting in a separation of the water/alcohol from the gasoline in the fuel tank.

The fuel system components on your Mercury Marine engine will withstand up to 10% alcohol content in the gasoline. We do not know what percentage your boat's fuel system will withstand. Contact your boat manufacturer for specific recommendations on the boat's fuel system components (fuel tanks, fuel lines, and fittings). Be aware that gasolines containing alcohol may cause increased:

- Corrosion of metal parts
- Deterioration of rubber or plastic parts
- Fuel permeation through rubber fuel lines
- Starting and operating difficulties

⚠ WARNING

FIRE AND EXPLOSION HAZARD: Fuel leakage from any part of the fuel system can be a fire and explosion hazard which can cause serious bodily injury or death. Careful periodic inspection of entire fuel system is mandatory, particularly after storage. All fuel components should be inspected for leakage, softening, hardening, swelling or corrosion. Any sign of leakage or deterioration requires replacement before further engine operation.

Because of possible adverse effects of alcohol in gasoline, it is recommended that only alcohol-free gasoline be used where possible. If only fuel containing alcohol is available, or if the presence of alcohol is unknown, increased inspection frequency for leaks and abnormalities is required.

IMPORTANT: When operating a Mercury Marine engine on gasoline containing alcohol, storage of gasoline in the fuel tank for long periods should be avoided. Long periods of storage, common to boats, create unique problems. In cars, alcohol-blend fuels normally are consumed before they can absorb enough moisture to cause trouble, but boats often sit idle long enough for phase separation to take place. In addition, internal corrosion may take place during storage if alcohol has washed protective oil films from internal components.

FUEL AND OIL

Filling Fuel Tank

⚠ WARNING

Avoid serious injury or death from a gasoline fire or explosion. Always stop the engine and do not smoke or allow open flames or sparks in the area while filling fuel tanks.

Fill fuel tanks outdoors away from heat, sparks, and open flames.

Remove portable fuel tanks from boat to refill them.

Always stop engine before refilling tanks.

Do not completely fill the fuel tanks. Leave approximately 10% of the tank volume unfilled. Fuel will expand in volume as its temperature rises and can leak under pressure if the tank is completely filled.

PORTABLE FUEL TANK PLACEMENT IN THE BOAT

Place the fuel tank in the boat so the vent is higher than the fuel level under normal boat operating conditions.

Engine Oil Recommendations

Mercury or Quicksilver NMMA FC-W certified synthetic blend 25W-40 multi-viscosity 4-Stroke Outboard Oil is recommended for general, all-temperature use. If the recommended Mercury or Quicksilver NMMA FC-W certified oil is not available, a major brand of NMMA FC-W certified 4-Stroke Outboard Oil of similar viscosity may be used.

IMPORTANT: The use of non-detergent oils, multi-viscosity oils (other than Mercury or Quicksilver NMMA FC-W certified oil or a major brand NMMA FC-W certified oil), synthetic oils, low quality oils or oils that contain solid additives are not recommended.

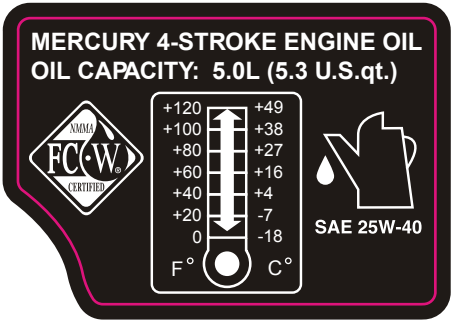

20862

Checking and Adding Engine Oil

IMPORTANT: Do not overfill. Tilt outboard out/up past vertical for approximately one minute to allow trapped oil to drain back to the oil sump. Tilt outboard to vertical (not tilted) position when checking engine oil. For accurate readings, check oil only when engine is cold or after engine has not run for at least an hour.

1. Before starting (cold engine) tilt outboard out/up past vertical to allow trapped oil to drain back to the oil sump. Allow outboard to remain tilted for approximately one minute.
2. Tilt outboard to vertical operating position.
3. Remove the top cowl. Refer to **Maintenance - Top Cowl Removal and Installation**.
4. Pull out the dipstick. Wipe the dipstick end with a clean rag or towel and push it back in all the way.
5. Pull the dipstick back out again and observe the oil level. Oil should be in the operating range (cross hatched region).

IMPORTANT: Do not try to fill the oil level to the top of the operating range (cross hatched region). Oil level is correct as long as it appears in the operating range (cross hatched region).

20712

a - Oil level operating range

6. If the oil level is below the operating range (cross hatched region), remove the oil filler cap and add approximately 500 ml (16 oz.) of the specified outboard motor oil. Allow a few minutes for the added oil to drain to the oil sump and recheck the dipstick. Repeat the process until the oil level is on the operating range (cross hatched region). Do not try to fill to the upper end of the operation range (cross hatched region).

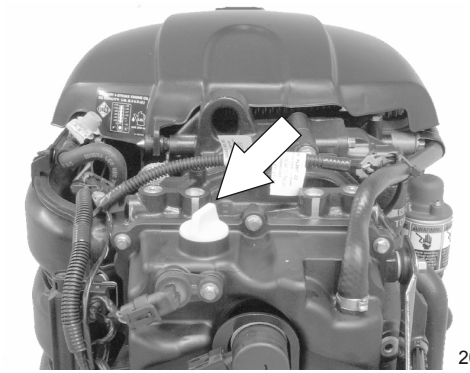

20714

IMPORTANT: Inspect oil for signs of contamination. Oil contaminated with water will have a milky color to it; oil contaminated with fuel will have a strong fuel smell. If contaminated oil is noticed, have the engine checked by your dealer.

7. Push the dipstick back in all the way.
8. Reinstall the oil fill cap hand-tight.
9. Reinstall top cowl.

FEATURES AND CONTROLS

Remote Control Features

Your boat may be equipped with one of the Mercury Precision or Quicksilver remote controls shown. If not, consult your dealer for a description of the functions and operations of the remote control.

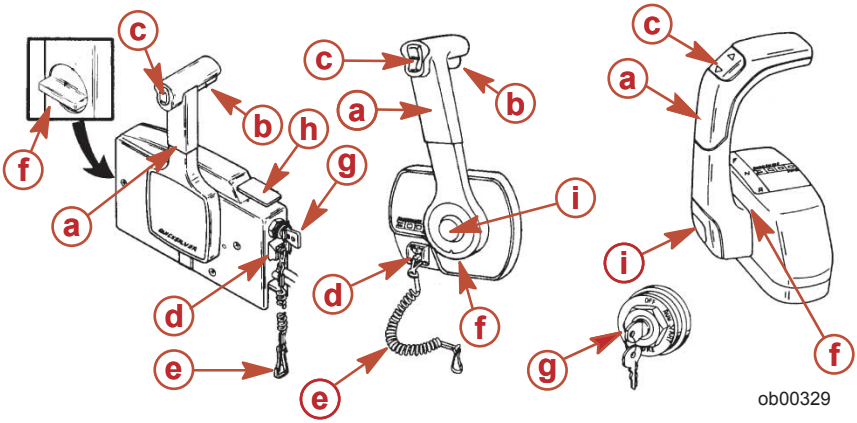

a - Control handle - forward, neutral, reverse.

b - Neutral release lever

c - Trim/tilt switch (if equipped). - Refer to **Features & Controls - Power Trim and Tilt**.

d - Lanyard stop switch - Refer to **General Information - Lanyard Stop Switch**.

e - Lanyard - Refer to **General Information - Lanyard Stop Switch**.

f - Throttle friction adjustment - Console controls require cover removal for adjustment.

g - Ignition key switch - "OFF," "ON," START."

h - Fast idle lever - Refer to **Operation - Starting the Engine**.

i - Throttle only button - Refer to **Operation - Starting the Engine**.

Warning System

WARNING HORN SIGNALS

When the key switch is turned to the "ON" position, the horn will turn on for a moment as a test to indicate the horn is working.

The warning horn will emit either a continuous beep or intermittent short beeps. This will alert the operator and help identify the following listed situations. For visual display of the specific engine functions and for additional engine data, refer to **SmartCraft Product** information, following.

Warning Horn		
Function	**Sound**	**Description**
Start up	Single beep	Normal system test.
Low battery	Four beeps every 2 minutes	Battery charging unable to keep up with demand. Raise engine speed, to increase charge, or shut down accessories, to reduce demand.

Warning Horn		
Function	**Sound**	**Description**
Cooling system problem	Continuous	Engine Guardian System is activated. Power limit will vary with level of overheat. Shift outboard into neutral and check for a steady stream of water coming out of the water pump indicator hole. If no water is coming out of the water pump indicator hole, or flow is intermittent, stop engine and check water intake holes for obstruction.
Oil pressure low	Continuous	Engine Guardian System is activated. Power limit will vary depending on available oil pressure. Stop engine and check oil dipstick. Add oil if necessary. Refer to **Fuel and Oil - Checking and Adding Engine Oil**.
Engine overspeed	Continuous	The warning horn is activated any time the engine speed exceeds the maximum allowable RPM. The system will limit the engine speed to within the allowable range. Engine overspeed indicates a condition that should be corrected. Overspeed could be caused by incorrect propeller pitch, engine height, trim angle, tilt angle (shallow water operation) etc.

Warning Horn		
Function	Sound	Description
Sensor/Actuator out of range	Single beep (engine running)	May be a problem with one of the engine functions. Have your dealer check the engine soon.
	Continuous	Engine Guardian System is activated. Power limit will restrict engine speed to either idle or 55%, depending on fault.

ENGINE GUARDIAN SYSTEM

The Engine Guardian System monitors the critical sensors on the engine for any early indications of problems. The system will respond to a problem by emitting a continuous beep and/or reducing engine power in order to provide engine protection.

If Guardian System has been activated, reduce throttle speed. The problem will need to be identified and corrected, if possible. The system must be reset before the engine will operate at higher speeds. Moving the throttle lever back to the idle position will reset the system.

SMARTCRAFT PRODUCT

A Mercury SmartCraft System instrument package can be purchased for this outboard. A few of the functions the instrument package will display are engine RPM, coolant temperature, oil pressure, water pressure, battery voltage, fuel consumption and engine operating hours.

The SmartCraft Instrument package will also aid in Engine Guardian diagnostics. The SmartCraft Instrument package will display critical engine alarm data and potential problems.

Power Trim and Tilt

The outboard has a trim/tilt control called power trim. This enables the operator to easily adjust the position of the outboard by pressing the trim switch. Moving the outboard in closer to the boat transom is called trimming in or down. Moving the outboard further away from the boat transom is called trimming out or up. The term trim generally refers to the adjustment of the outboard within the first 20° range of travel. This is the range used while operating the boat on plane. The term tilt is generally used when referring to adjusting the outboard further up out of the water. With the engine turned off and ignition switch turned on, the outboard can be tilted out of the water. At low idle speed, the outboard can also be tilted up past the trim range to permit, for example, shallow water operation.

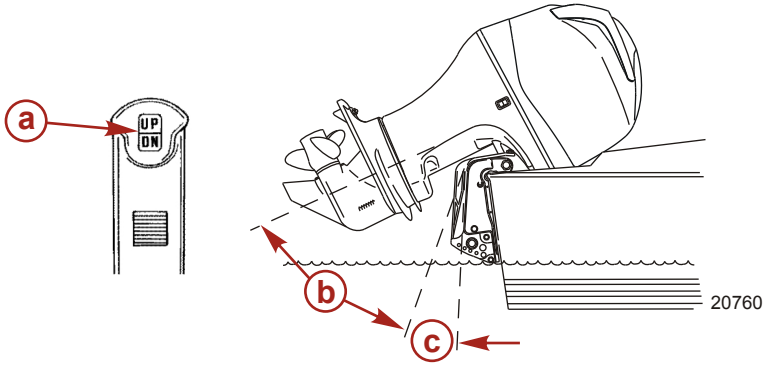

a - Trim switch
b - Tilt range
c - Trim range

POWER TRIM OPERATION

With most boats, operating around the middle of the trim range will give satisfactory results. However, to take full advantage of the trimming capability there may be times when you choose to trim your outboard all the way in or out. Along with an improvement in some performance aspects comes a greater responsibility for the operator, and this is being aware of some potential control hazards.

The most significant control hazard is a pull or torque that can be felt on the steering wheel or tiller handle. This steering torque results from the outboard being trimmed so that the propeller shaft is not parallel to the water surface.

⚠ WARNING

Avoid possible serious injury or death. When the outboard is trimmed in or out beyond a neutral steering condition, a pull on the steering wheel or tiller handle in either direction may result. Failure to keep a continuous firm grip on the steering wheel or tiller handle when this condition exists can result in loss of boat control as the outboard can turn freely. The boat can now spin out or go into a very tight maximum turn which, if unexpected, can result in occupants being thrown within the boat or out of the boat.

Consider the following lists carefully.

1. Trimming In or Down Can:
   - Lower the bow.
   - Result in quicker planing off, especially with a heavy load or a stern heavy boat.
   - Generally improve the ride in choppy water.
   - Increase steering torque or pull to the right (with the normal right hand rotation propeller).
   - In excess can lower the bow of some boats to a point where they begin to plow with their bow in the water while on plane. This can result in an unexpected turn in either direction (called bow steering or over-steering) if any turn is attempted, or if a significant wave is encountered.

⚠ WARNING

Avoid possible serious injury or death. Adjust outboard to an intermediate trim position as soon as boat is on plane to avoid possible ejection due to boat spin out. Do not attempt to turn boat when on plane if outboard is trimmed extremely in or down and there is a pull on the steering wheel or tiller handle.

- In rare circumstances, the owner may decide to limit the trim in. This can be accomplished by purchasing a stainless steel tilt pin from your dealer and inserting it in whatever adjustment hole in the transom brackets is desired. The non-stainless steel shipping bolt should not be used in this application other than on a temporary basis.

2. Trimming Out or Up can:
   - Lift the bow higher out of the water.
   - Generally increase top speed.
   - Increase clearance over submerged objects or a shallow bottom.
   - Increase steering torque or pull to the left at a normal installation height (with the normal right hand rotation propeller).
   - In excess can cause boat porpoising (bouncing) or propeller ventilation.
   - Cause engine overheating if any cooling water intake holes are above the water line.

TILTING OPERATION

To tilt outboard, shut off the engine and press the trim/tilt switch or auxiliary tilt switch to the up position. The outboard will tilt up until the switch is released or it reaches its maximum tilt position.

1. Engage the tilt support lever, by rotating knob to bring the support lever upward.
2. Lower outboard to rest on the tilt support lever.
3. Disengage the tilt support lever, by raising the outboard off the support lever and rotating the lever down. Lower the outboard.

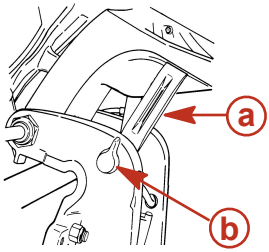

ob00664

a - Tilt support lever **b -** Knob

MANUAL TILTING

If the outboard cannot be tilted using the power trim/tilt switch, the outboard can be manually tilted.

NOTE: *The manual tilt release valve must be tightened before operating the outboard to prevent the outboard from tilting up during reverse operation.*

1. Turn out the manual tilt release valve 3 turns counterclockwise. This allows manual tilting of the outboard. Tilt the outboard to the desired position and tighten the manual tilt release valve.

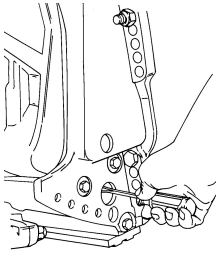

22362

AUXILIARY TILT SWITCH

This switch can be used to tilt the outboard up or down using the power trim system.

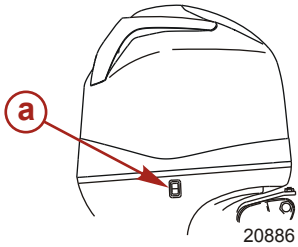

a - Auxiliary tilt switch

SHALLOW WATER OPERATION

When operating your boat in shallow water, you can tilt the outboard beyond the maximum trim range to prevent hitting bottom.

1. Reduce engine speed below 2000 RPM.
2. Tilt outboard up. Make sure all the water intake holes stay submerged at all times.
3. Operate the engine at slow speed only. If engine speed exceeds 2000 RPM, the outboard will automatically return down to the maximum trim range.

OPERATION

Pre-Starting Check List

- Operator knows safe navigation, boating, and operating procedures.
- An approved personal flotation device of suitable size for each person aboard and readily accessible (it is the law).
- A ring type life buoy or buoyant cushion designed to be thrown to a person in the water.
- Know your boats maximum load capacity. Look at the boat capacity plate.
- Fuel supply OK.
- Arrange passengers and load in the boat so the weight is distributed evenly and everyone is seated in a proper seat.
- Tell someone where you are going and when you expect to return.
- It is illegal to operate a boat while under the influence of alcohol or drugs.
- Know the waters and area you will be boating; tides, currents, sand bars, rocks, and other hazards.
- Make inspection checks listed in **Maintenance - Inspection and Maintenance Schedule.**

Operating In Freezing Temperatures

When using your outboard or having your outboard moored in freezing or near freezing temperatures, keep the outboard tilted down at all times so the gearcase is submerged. This prevents trapped water in gearcase from freezing and causing possible damage to the water pump and other components.

If there is a chance of ice forming on the water, the outboard should be removed and drained completely of water. If ice should form at the water level inside the outboard driveshaft housing, it will block water flow to the engine causing possible damage.

Operating In Salt Water Or Polluted Water

We recommend that you flush the internal water passages of your outboard with fresh water after each use in salt or polluted water. This will prevent a buildup of deposits from clogging the water passages. Refer to **Maintenance - Flushing The Cooling System**.

If you keep your boat moored in the water, always tilt the outboard so the gearcase is completely out of water (except in freezing temperatures) when not in use.

Wash the outboard exterior and flush out the exhaust outlet of the propeller and gearcase with fresh water after each use. Each month, spray Mercury Precision or Quicksilver Corrosion Guard on external metal surfaces. Do not spray on corrosion control anodes as this will reduce the effectiveness of the anodes.

Setting Trim Angle while Running Engine at Idle Speed

The exhaust relief hole on the outboard can become submerged on some boats if the engine is trimmed full in while running at idle speed. This may result in exhaust restriction, rough idle, excessive smoke, and fouled spark plugs. If this condition exists, trim outboard up until exhaust relief hole is out of the water.

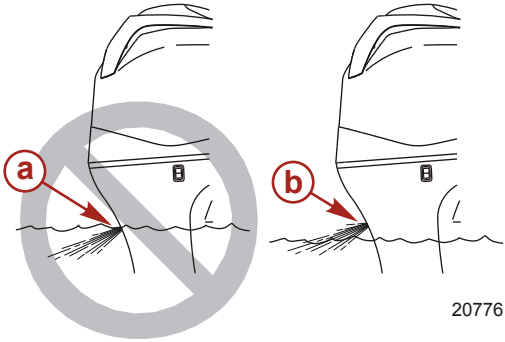

a - Relief hole submerged (wrong)

b - Relief hole above water line (correct)

Engine Break-in Procedure

⚠ CAUTION

Severe damage to the engine can result by not complying with the Engine Break-in Procedure.

1. For the first two hours of operation, run the engine at varied throttle settings up to 4500 RPM or at three-quarter throttle, and at full throttle for approximately one minute every ten minutes.
2. For the next eight hours of operation, avoid continuous operation at full throttle for more than five minutes at a time.

Starting The Engine - Remote Control Models

Before starting, read the **Pre-Starting Check List**, and **Engine Break-in Procedure** in the **Operation** section.

⚠ CAUTION

Never start or operate your outboard (even momentarily) without water circulating through all the cooling water intake holes in the gearcase to prevent damage to the water pump (running dry) or overheating of the engine.

1. Check the engine oil level.

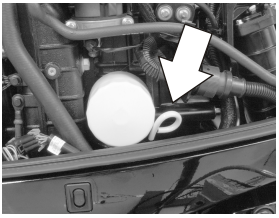

2. Ensure the cooling water intake is submerged.

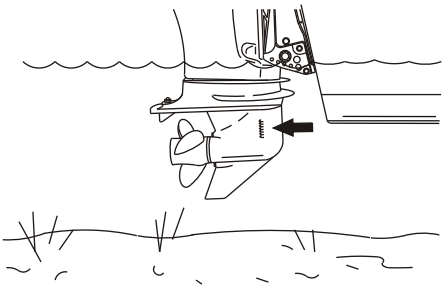

20765

3. Open fuel tank vent screw (in filler cap) on manual venting type fuel tanks.

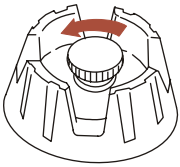

19748

4. Set the lanyard stop switch to RUN position. Refer to **General Information - Lanyard Stop Switch**.

19791

5. Shift outboard to neutral (N) position.

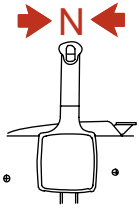

ob00351

NOTE: *For initial start of a new engine or for an engine that ran out of fuel or was drained of fuel, the fuel system should be filled as follows:*
Turn the ignition key switch to the "ON" position for approximately one minute. This operates the fuel lift pump. Turn the ignition key switch back to the "OFF" position and then return the ignition key switch to the "ON" position again for an additional minute. Turn the ignition key switch back to the "OFF" position. The filling of the fuel system is complete.

6. Turn ignition key to the "START" position. If engine fails to start in ten seconds, return key to "ON" position, wait 30 seconds and try again.

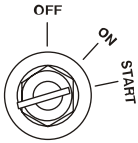

19804

7. After engine starts, check for a steady stream of water flowing out of the water pump indicator hole.

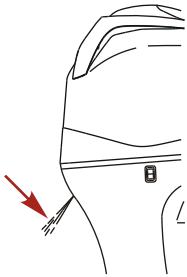
20766

IMPORTANT: If no water is coming out of the water pump indicator hole, stop engine and check cooling water intake for obstruction. No obstruction may indicate a water pump failure or blockage in the cooling system. These conditions will cause the engine to overheat. Have the outboard checked by your dealer. Operating the engine while overheated will cause engine damage.

WARMING UP ENGINE

Before beginning operation, allow the engine to warm up at idling speed for three minutes.

Gear Shifting

IMPORTANT: Observe the following:

- **Never shift outboard into gear unless engine speed is at idle.**
- **Do not shift outboard into reverse when the engine is not running.**
- Your outboard has three gear shift positions to provide operation. Forward (F), Neutral (N) and Reverse (R).
- When shifting, always stop at neutral position and allow the engine speed to return to idle.
- Always shift outboard into gear with a quick motion.
- After shifting outboard into gear, advance the lever further to increase speed.

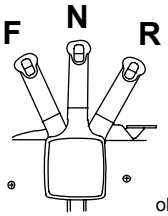

ob00557

Stopping The Engine

Reduce engine speed and shift outboard to neutral position. Turn ignition key to "OFF" position.

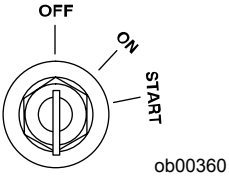
OFF
ON
START
ob00360

MAINTENANCE

Outboard Care

To keep your outboard in the best operating condition, it is important that your outboard receive the periodic inspections and maintenance listed in the **Inspection and Maintenance Schedule**. We urge you to keep it maintained properly to ensure the safety of you and your passengers, and retain its dependability.

⚠ WARNING

Neglected inspection and maintenance service of your outboard or attempting to perform maintenance or repair on your outboard if you are not familiar with the correct service and safety procedures could cause personal injury, death, or product failure.

Record maintenance performed in the **Maintenance Log** at the back of this book. Save all maintenance work orders and receipts.

SELECTING REPLACEMENT PARTS FOR YOUR OUTBOARD

We recommend using original Mercury Precision or Quicksilver replacement parts and Genuine Lubricants.

⚠ WARNING

Using a replacement part that is inferior to the original part could result in personal injury, death, or product failure.

EPA Emissions

EMISSION CERTIFICATION LABEL

An emission certification label, showing emission levels and engine specifications directly related to emissions, is placed on the engine at time of manufacture.

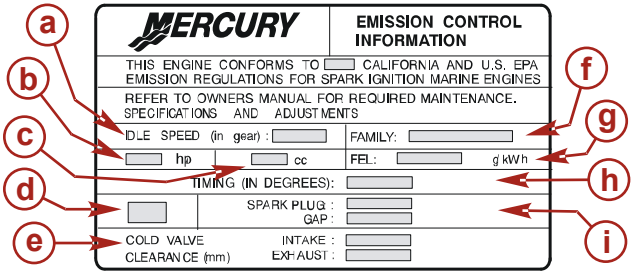

21096

- **a -** Idle speed
- **b -** Engine horsepower
- **c -** Piston displacement
- **d -** Date of manufacture
- **e -** Valve clearance (if applicable)
- **f -** Family number
- **g -** Maximum emission output for the engine family
- **h -** Timing specification
- **i -** Recommended spark plug and gap

OWNER RESPONSIBILITY

The owner/operator is required to have routine engine maintenance performed to maintain emission levels within prescribed certification standards.

The owner/operator is not to modify the engine in any manner that would alter the horsepower or allow emissions levels to exceed their predetermined factory specifications.

MAINTENANCE

Inspection and Maintenance Schedule

BEFORE EACH USE

- Check engine oil level. See **Fuel and Oil - Checking and Adding Engine Oil**.
- Check that lanyard stop switch stops the engine.
- Visually inspect the fuel system for deterioration or leaks.
- Check outboard for tightness on transom.
- Check steering system for binding or loose components.
- Check propeller blades for damage.

AFTER EACH USE

- Flush out the outboard cooling system if operating in salt or polluted water. See **Flushing the Cooling System**.
- Wash off all salt deposits and flush out the exhaust outlet of the propeller and gearcase with fresh water if operating in saltwater.
- If operating in saltwater, inspect the powerhead and powerhead components for salt build-up. See **Cleaning Care for the Powerhead (Saltwater Use)**.

EVERY 100 HOURS OF USE OR ONCE YEARLY, WHICHEVER OCCURS FIRST

- Change engine oil and replace the oil filter. The oil should be changed more often when the engine is operated under adverse conditions such as extended trolling. See **Changing Engine Oil**.
- Inspect the thermostat visually for corrosion and or for a broken spring. Make sure the thermostat closes completely at room temperature.[1].
- Check low pressure fuel filter for contaminants. Replace filter if required. See **Fuel System**.
- Check corrosion control anodes. Check more frequently when used in saltwater. See **Corrosion Control Anode**.
- Drain and replace gearcase lubricant. See **Gearcase Lubrication**.
- Check power trim fluid. See **Checking Power Trim Fluid**.
- Inspect battery. See **Battery Inspection**.
- Saltwater usage. Remove and inspect spark plugs for corrosion and replace spark plugs as necessary. Apply a thin coating of Anti-Seize Compound only on threads of spark plug prior to installation. See **Spark Plug Inspection and Replacement**.

Tube Ref No.	Description	Where Used	Part No.
81	Anti-Seize Compound	Spark plug threads	92-881091K1

- Check wiring and connectors.
- Check tightness of bolts, nuts, and other fasteners.
- Check cowl seals to make sure seals are intact and not damaged.
- Check internal cowl sound reduction foam (if equipped) to make sure foam is intact and not damaged.
- Check that the intake silencer (if equipped) is in place.
- Check that the idle relief muffler (if equipped) is in place.
- Check for loose hose clamps and rubber boots (if equipped) on the air intake assembly.

EVERY 300 HOURS OF USE OR THREE YEARS

- Replace water pump impeller (more often if overheating occurs or reduced water pressure is noted).[1].

1. These items should be serviced by an authorized dealer.

- Replace high pressure in-line fuel filter.[1].
- Replace spark plugs after the first 300 hours or three years. After that, inspect spark plugs every 300 hours or three years. Replace spark plugs as needed. See **Spark Plug Inspection and Replacement**.
- Replace accessory drive belt. See **Accessory Drive Belt Inspection**.[1].

BEFORE PERIODS OF STORAGE

- See **Storage** section.

Flushing the Cooling System

Flush the internal water passages of the outboard with fresh water after each use in salt, polluted, or muddy water. This will help prevent a build-up of deposits from clogging the internal water passages.

IMPORTANT: The engine must be run during flushing in order to open the thermostat and circulate water through the water passages.

NOTE: *You can have the outboard tilted or in the vertical operating position during flushing.*

⚠ WARNING

To avoid possible injury when flushing, remove the propeller. Refer to Propeller Replacement.

1. Place the outboard in either the operating position (vertical) or in a tilted position.
2. Remove propeller. Refer to **Propeller Replacement**.
3. Thread a water hose into the rear fitting. Partially open the water tap (1/2 maximum). Do not open the water tap all the way, as this allows a high pressure flow of water.

IMPORTANT: Do not run engine above idle when flushing.

4. Shift outboard into neutral. Start the engine and flush the cooling system for at least five minutes. Keep engine speed at idle.
5. Stop the engine. Turn off the water and remove the hose. Reinstall the propeller.

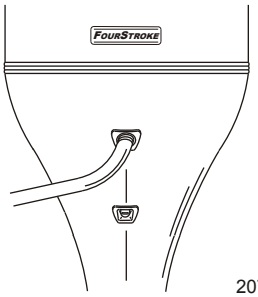

20762

Top Cowl Removal and Installation

REMOVAL

1. Pull out the front cowl latch.

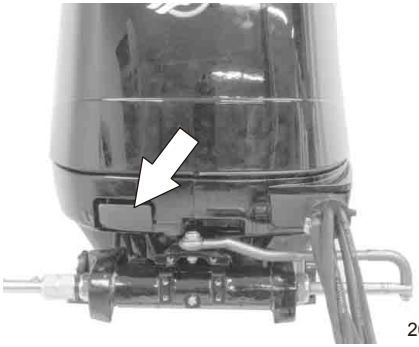

20739

2. Pull down the rear cowl latch. Remove the top cowl.

20741

INSTALLATION

1. Lower the top cowl into position over the engine.
2. Pull up the rear cowl latch to lock down the rear. Push in the front cowl latch to lock down the front.

Flywheel Cover Removal and Installation

REMOVAL

Lift the cover off the rear mounting pin and slide the cover forward to release the cover from the front mounting pins.

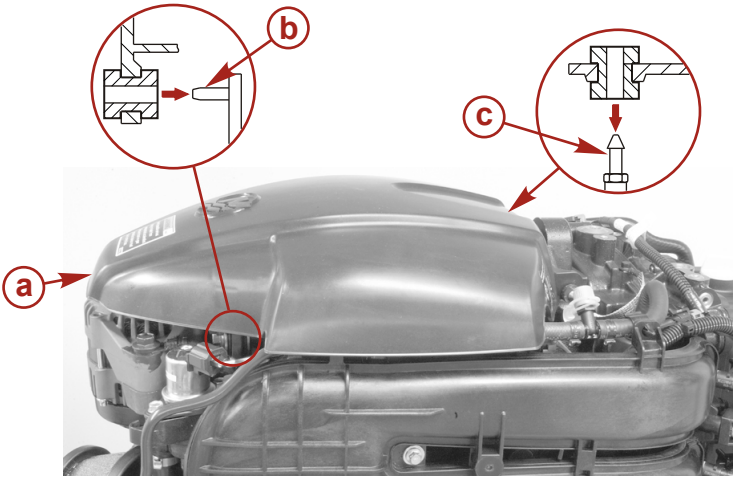

20910

a - Flywheel cover
b - Front mounting pins
c - Rear mounting pin

INSTALLATION

Position the cover onto the two front pins and then secure the cover in place by pushing the cover down onto the rear mounting pin.

Cleaning Care for Top and Bottom Cowls

IMPORTANT: Dry wiping (wiping the plastic surface when it is dry) will result in minor surface scratches. Always wet the surface before cleaning. Do not use detergents containing hydrochloric acid. Follow the cleaning and waxing procedure.

CLEANING AND WAXING PROCEDURE

1. Before washing, rinse the cowls with clean water to remove dirt and dust that may scratch the surface.
2. Wash the cowls with clean water and a mild non-abrasive soap. Use a soft clean cloth when washing.
3. Dry thoroughly with a soft clean cloth.
4. Wax the surface using a non-abrasive automotive polish (polish designed for clear coat finishes). Remove the applied wax by hand using a clean soft cloth.
5. To remove minor scratches, use Mercury Marine Cowl Finishing Compound (92-859026K 1).

Cleaning Care for the Powerhead (Saltwater Use)

If the outboard is operated in saltwater, remove the top cowl and flywheel cover. Inspect the powerhead and powerhead components for salt build-up. Wash off any salt build-up from the powerhead and powerhead components with fresh water. Keep water spray out of the air filter/intake and alternator. After washing, allow the powerhead and components to dry. Apply Quicksilver or Mercury Precision Lubricants Corrosion Guard spray on the external metal surfaces of the powerhead and powerhead components. Do not allow the Corrosion Guard spray to come in contact with the alternator drive belt or belt pulleys.

IMPORTANT: Do not allow lubricant or Corrosion Guard spray to come in contact with the alternator drive belt or the belt pulleys. The alternator drive belt could slip and be damaged if it becomes coated with any lubricant or Corrosion Guard spray.

Tube Ref No.	Description	Where Used	Part No.
120	Corrosion Guard	External metal surfaces of the powerhead and powerhead components.	92-802878Q55

Battery Inspection

The battery should be inspected at periodic intervals to ensure proper engine starting capability.

IMPORTANT: Read the safety and maintenance instructions which accompany your battery.

1. Turn off the engine before servicing the battery.
2. Add water as necessary to keep the battery full.
3. Make sure the battery is secure against movement.
4. Battery cable terminals should be clean, tight, and correctly installed. Positive to positive and negative to negative.
5. Make sure the battery is equipped with a non-conductive shield to prevent accidental shorting of battery terminals.

Air Filter

The air filter is a one piece assembly. The air filter removes airborne particles which may damage engine components. The air filter design allows for maximum unrestricted air flow during engine operation.

AIR FILTER ASSEMBLY REMOVAL

1. Remove the breather tube from the air filter.

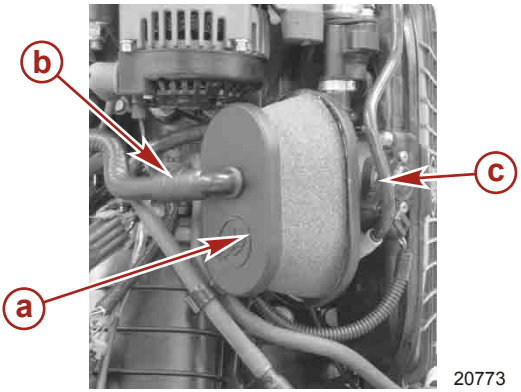

20773

a - Air filter assembly
b - Breather tube
c - Air intake

2. Remove the purge vent tube from the air filter.
3. Pull the air filter assembly off the front of the air intake.

NOTE: *To help in the removal of the air filter assembly, use the bottom tab that is located on the mounting flange of the filter and push out on the flange while pulling the air filter assembly off the air intake.*

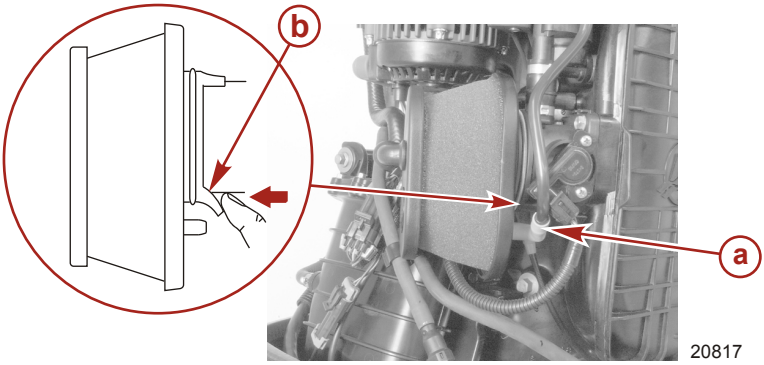

a - Purge vent tube **b -** Bottom tab

AIR FILTER ASSEMBLY INSTALLATION

1. Place the air filter assembly over the air intake as shown and then push the air filter assembly onto the air intake until it is fully seated.
2. Reconnect the breather tube and purge vent tube to the air filter.

Fuel System

⚠ WARNING

Avoid serious injury or death from gasoline fire or explosion. Carefully follow all fuel system service instructions. Always stop the engine and do not smoke or allow open flames or sparks in the area while servicing any part of the fuel system.

IMPORTANT: Use an approved container to collect and store fuel. Wipe up spilled fuel immediately. Material used to contain spilled fuel must be disposed of in an approved receptacle.

Before servicing any part of the fuel system:

1. Stop engine and disconnect the battery.
2. Perform fuel system service in a well ventilated area.
3. Inspect any completed service work for sign of fuel leakage.

FUEL LINE INSPECTION

Visually inspect the fuel line for cracks, swelling, leaks, hardness, or other signs of deterioration or damage. If any of these conditions are found, the fuel line must be replaced.

FUEL FILTERS

Refer to the **Inspection and Maintenance Schedule** for the proper maintenance interval.

The engine is equipped with two fuel filters, One low pressure filter and one high pressure filter. The low pressure filter can be serviced as a general maintenance item, however the high pressure filter is under high pressure and should only be serviced by an authorized dealer.

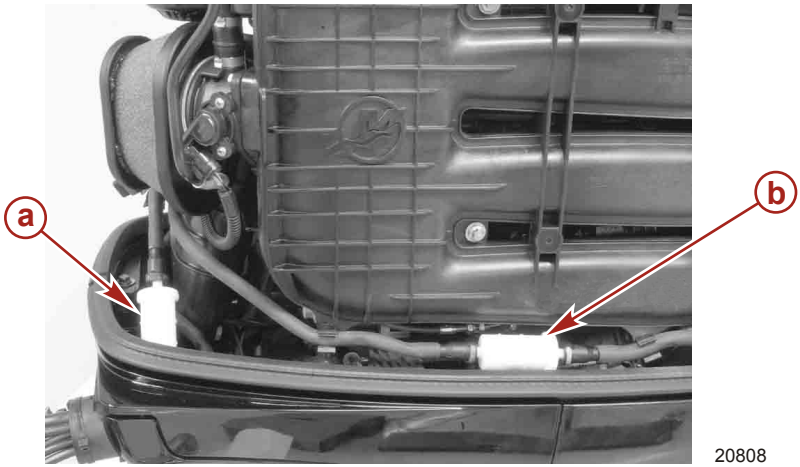

20808

a - Low pressure fuel filter

b - High pressure fuel filter

HIGH PRESSURE FUEL FILTER

The high pressure fuel filter is under high pressure. A special tool and procedure is required to release the fuel pressure before the filter can be removed. Have the high pressure fuel filter serviced by an authorized dealer.

LOW PRESSURE FUEL FILTER

Removal

1. Turn ignition key switch to "OFF" position.
2. Remove the cap from the fuel vapor purge relief valve.

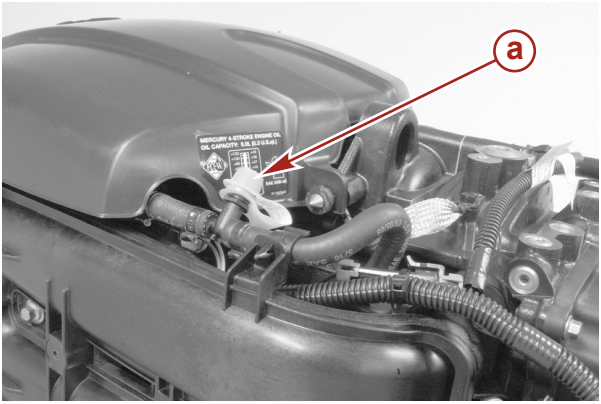

20813

a - Fuel vapor purge relief valve

⚠ CAUTION

Fuel vapor vent system is under pressure. Cover valve assembly with a rag or towel to prevent fuel or fuel vapor spray. Relieve pressure slowly.

3. Place a rag or towel around the valve, and release the fuel pressure by pushing the core of the valve end in.

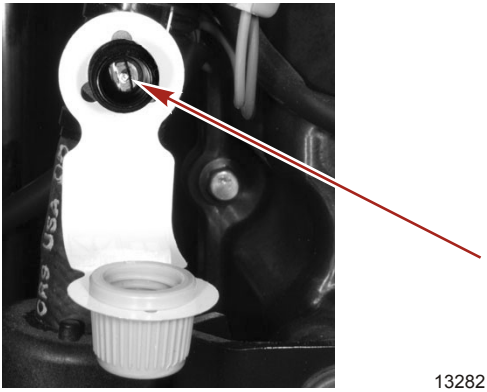

13282

4. Push in on the fuel hose release tabs and disconnect the fuel hoses from the fuel filter.

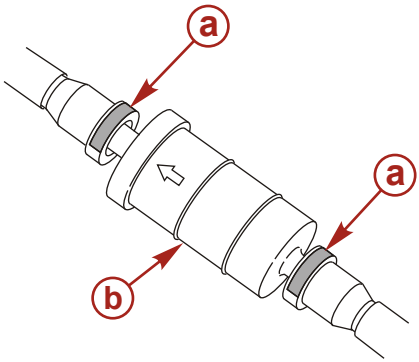

20815

a - Fuel hose release tab

b - Low pressure fuel filter

Installation

1. Install the new fuel filter so the arrow points towards the engine.
2. Connect the fuel hoses to the fuel filter securely with the locking hose connections.
3. If removed, place the fuel hose into the fuel hose retainer.

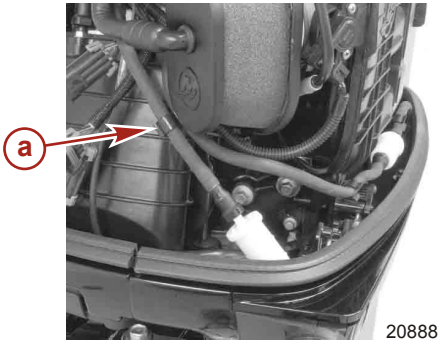

20888

a - Fuel hose retainer

4. Visually inspect for fuel leakage from the fuel filter while turning the ignition key to "RUN" position, forcing fuel into the fuel filter. Repair any fuel leaks if necessary.

Corrosion Control Anode

The outboard has corrosion control anodes at different locations. An anode helps protect the outboard against galvanic corrosion by sacrificing its metal to be slowly eroded instead of the outboard metals.

Each anode requires periodic inspection, especially in saltwater which will accelerate the erosion. To maintain this corrosion protection, always replace the anode before it is completely eroded. Never paint or apply a protective coating on the anode as this will reduce effectiveness of the anode.

Two anodes are located on each side of the gearcase. Another anode is installed on the bottom of the transom bracket assembly.

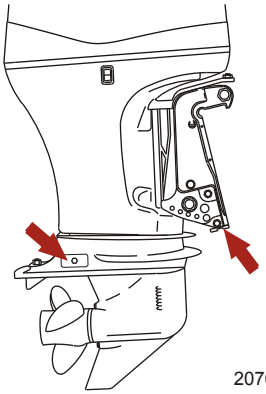

20761

Propeller Replacement

⚠ WARNING

If the propeller shaft is rotated while the engine is in gear, there is the possibility that the engine will crank over and start. To prevent this type of accidental engine starting and possible serious injury caused from being struck by a rotating propeller, always shift outboard to neutral position and remove spark plug leads when you are servicing the propeller.

1. Shift outboard to neutral (N) position.

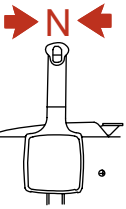

ob00351

2. Straighten the bent tabs on the propeller nut retainer.

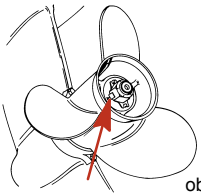

ob00376

3. Place a block of wood between gearcase and propeller to hold propeller and remove propeller nut.

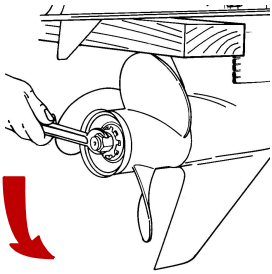

ob00377

4. Pull propeller straight off shaft.
5. Coat the propeller shaft with Quicksilver or Mercury Precision Lubricants Anti-Corrosion Grease or 2-4-C with Teflon.

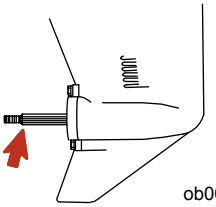

ob00378

Tube Ref No.	Description	Where Used	Part No.
94	Anti-Corrosion Grease	Propeller shaft	92-802867Q1
95	2-4-C Marine Lubricant with Teflon	Propeller shaft	92-802859Q1

IMPORTANT: To prevent the propeller hub from corroding and seizing to the propeller shaft, especially in salt water, always apply a coat of the recommended lubricant to the entire propeller shaft at the recommended maintenance intervals and also each time the propeller is removed.

6. Flo-Torq I Drive Hub Propellers - Install thrust washer, propeller, continuity washer, thrust hub, propeller nut retainer, and propeller nut onto the shaft.

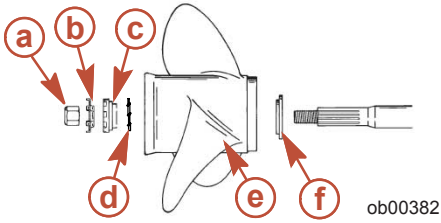

a - Propeller nut
b - Propeller nut retainer
c - Rear thrust hub
d - Continuity washer
e - Propeller
f - Forward thrust hub

7. Flo-Torq II and Flo-Torq III Drive Hub Propellers - Install forward thrust hub, replaceable drive sleeve, propeller, thrust hub, propeller nut retainer and propeller nut onto the shaft.

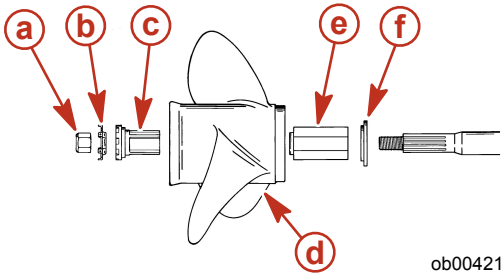

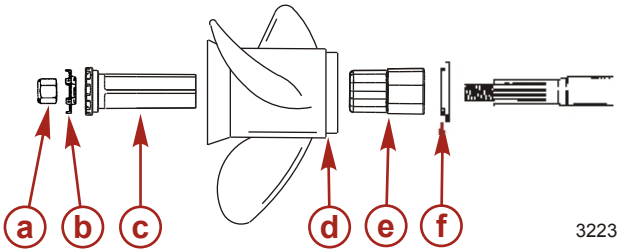

Flo-Torq II **Flo-Torq III**

a - Propeller nut
b - Propeller nut retainer
c - Rear thrust hub
d - Propeller
e - Replaceable drive sleeve
f - Forward thrust hub

8. Place a block of wood between the gearcase and propeller. Torque propeller nut to specifications.

Description	Nm	lb. in.	lb. ft.
Propeller nut	75		55

9. Secure propeller nut by bending three of the tabs into the thrust hub grooves.

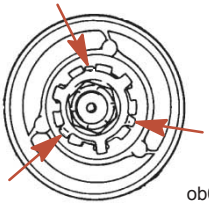

ob00422

10. Reinstall spark plug leads.

Spark Plug Inspection and Replacement

1. Remove top cowling. Refer to **Top Cowl Removal and Installation**.
2. Disconnect the wiring harness connectors from the pencil coils.
3. Remove the mounting bolts that are securing the pencil coils. Pull the pencil coils from the spark plugs using a twisting motion.

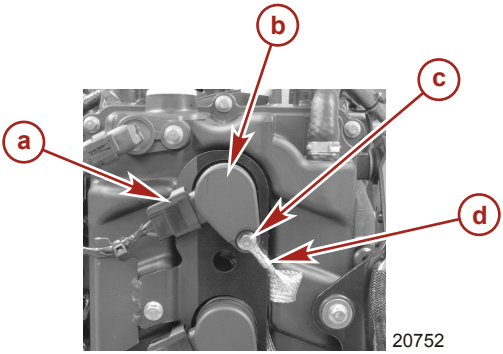

20752

a - Wiring harness connector
b - Pencil coil
c - Bolt
d - Ground strap

4. Remove the spark plugs to inspect. Replace spark plug if electrode is worn, threads of seal area are corroded, or the insulator is rough, cracked, broken, blistered or fouled.

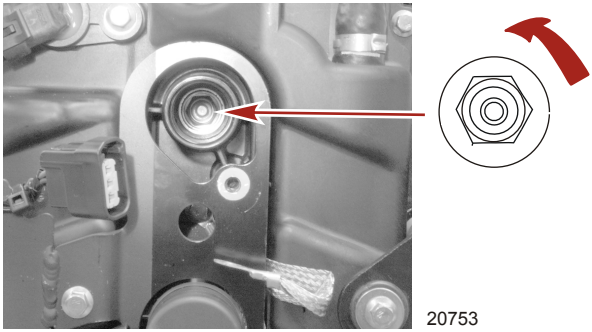

20753

5. Set the spark plug gap to specifications.

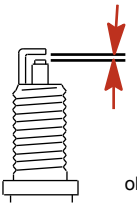

Spark Plug	
Spark Plug Gap	0.8 mm (0.032 in.)

6. Saltwater use - Apply a thin coating of Anti-Seize Compound only on threads of spark plugs.
7. Before installing spark plugs, clean off any dirt on the spark plug seats. Install plugs finger tight, and then tighten 1/4 turn or torque to specifications.

Description	Nm	lb. in.	lb. ft.
Spark plug	27		20

8. Push pencil coils into place over the spark plugs using a twisting motion.
9. Secure coils with retained bolts. Torque to specifications.

Description	Nm	lb. in.	lb. ft.
Bolts	8	71	

10. Reconnect the wiring harness connectors to the pencil coil connections.

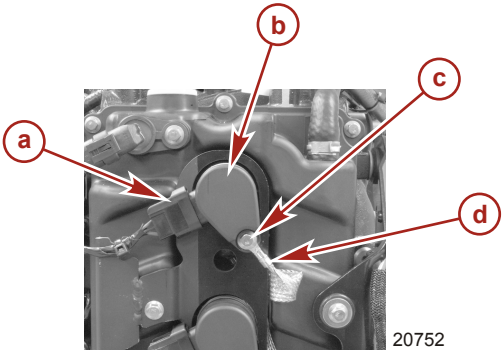

a - Wiring harness connector
b - Pencil coil
c - Bolt
d - Ground strap

11. Reinstall top cowl.

Fuse Replacement

IMPORTANT: Always carry spare fuses.

The electrical wiring circuits on the outboard are protected from overload by fuses in the wiring. If a fuse is blown, try to locate and correct the cause of the overload. If the cause is not found, the fuse may blow again.

Open the fuse holder and look at the silver colored band inside the fuse. If band is broken, replace the fuse. Replace fuse with a new fuse with the same rating.

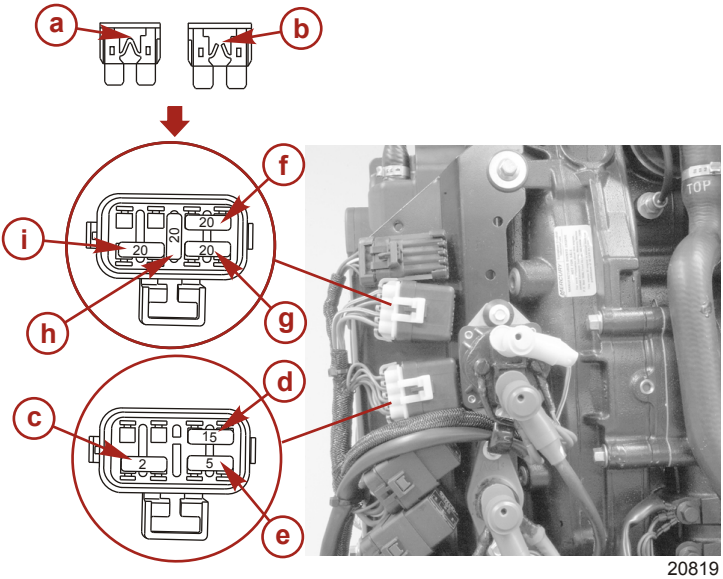

20819

a - Good fuse
b - Blown fuse
c - Diagnostics terminal - 2 AMP fuse
d - 14 pin remote control harness/cowl trim switch/main power relay - 15 AMP fuse
e - SmartCraft data bus circuit - 5 AMP fuse
f - Electric fuel pump - 20 AMP fuse
g - Ignition coils - 20 AMP fuse
h - Spare fuse - 20 AMP fuse
i - Fuel injectors/purge valve/idle air control - 20 AMP fuse

Alternator Drive Belt Inspection

Inspect the alternator drive belt and have it replaced by an authorized dealer if any of the following conditions are found:

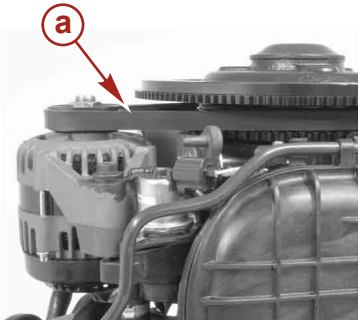

20775

a - Alternator drive belt

- Cracks in the back of the belt or in the base of the V grooves.
- Excessive wear at the roots of the grooves.
- Rubber portion swollen by oil.

- Belt surfaces roughened.
- Signs of wear on edges or outer surfaces of belt.

Lubrication Points

1. Lubricate the following with Quicksilver or Mercury Precision Lubricants Anti-Corrosion Grease or 2-4-C with Teflon.

Tube Ref No.	Description	Where Used	Part No.
94	Anti-Corrosion Grease	Propeller shaft	92-802867Q1
95	2-4-C with Teflon	Propeller shaft	92-802859Q1

- Propeller Shaft - Refer to **Propeller Replacement** for removal and installation of the propeller. Coat the entire propeller shaft with lubricant to prevent the propeller hub from corroding and seizing to the shaft.

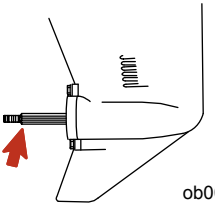

ob00378

2. Lubricate the following with Quicksilver or Mercury Precision Lubricants 2-4-C with Teflon or Special Lubricant 101.

Tube Ref No.	Description	Where Used	Part No.
95	2-4-C with Teflon	Swivel bracket, tilt support lever, tilt tube, steering cable	92-802859Q1
34	Special Lubricant 101	Swivel bracket, tilt support lever, tilt tube, steering cable	92-802865Q1

- Swivel Bracket - Lubricate through fitting.
- Tilt Support Lever - Lubricate through fitting.

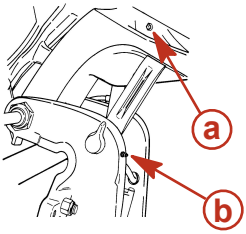

ob00683

a - Swivel bracket **b -** Tilt support lever

- Tilt Tube - Lubricate through fitting.

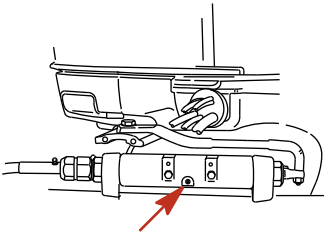

ob00684

- Steering Cable Grease Fitting (If equipped) - Rotate steering wheel to fully retract the steering cable end into the outboard tilt tube. Lubricate through fitting.

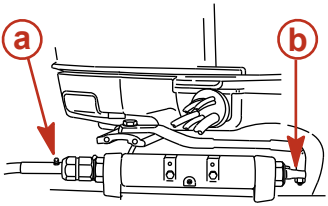

ob00685

a - Fitting **b -** Steering cable end

⚠ WARNING

The end of the steering cable must be fully retracted into the outboard tilt tube before adding lubricant. Adding lubricant to steering cable when fully extended could cause steering cable to become hydraulically locked. A hydraulically locked steering cable will cause loss of steering control, possibly resulting in serious injury or death.

3. Lubricate the following with light weight oil.
   - Steering Link Rod Pivot Points - Lubricate pivot points.

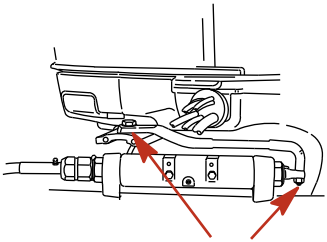

ob00686

Checking Power Trim Fluid

1. Tilt outboard to the full up position and engage the tilt support lever.

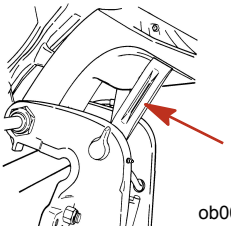

ob00687

2. Remove fill cap and check fluid level. The fluid level should be even with the bottom of the fill hole. Add Quicksilver or Mercury Precision Lubricants Power Trim & Steering Fluid. If not available, use automotive (ATF) automatic transmission fluid.

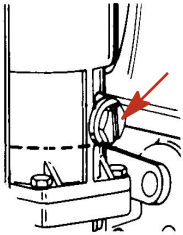

ob00688

Changing Engine Oil

ENGINE OIL CAPACITY

Engine oil capacity is approximately 5 liters (5.3 quarts).

OIL CHANGING PROCEDURE

1. Tilt the outboard up to the trailer position.
2. Turn the steering on the outboard so that the drain hole is facing downward. Remove drain plug and drain engine oil into an appropriate container. Lubricate the seal on the drain plug with oil and reinstall.

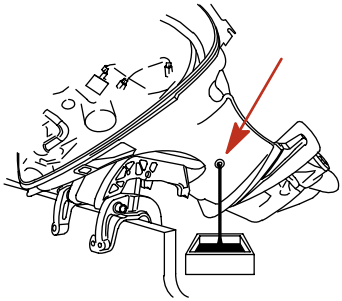

ob00436

CHANGING OIL FILTER

1. Place a rag or towel below the oil filter to absorb any spilled oil.
2. Unscrew old filter by turning the filter to the left.
3. Clean the mounting base. Apply film of clean oil to filter gasket. Do not use grease. Screw new filter on until gasket contacts base, then tighten 3/4 to 1 turn.

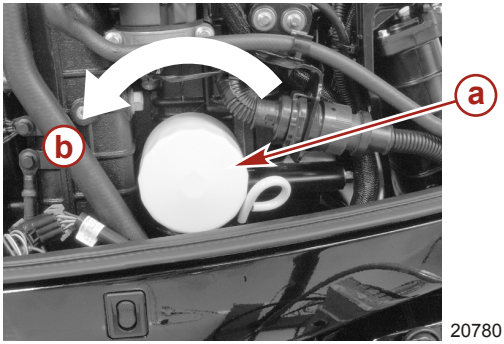

20780

a - Oil filter **b -** Loosen

OIL FILLING

1. Remove the oil fill cap and add the recommended oil to the midpoint of the operating range (midpoint of the cross hatched region). Adding approximately 5 liters (5.3 quarts) will bring the oil level to mid point of the cross hatched region.
2. Idle engine for five minutes and check for leaks. Stop the engine. Allow a few minutes for the oil to drain to the oil sump and recheck the oil on the dipstick. Add oil if necessary.

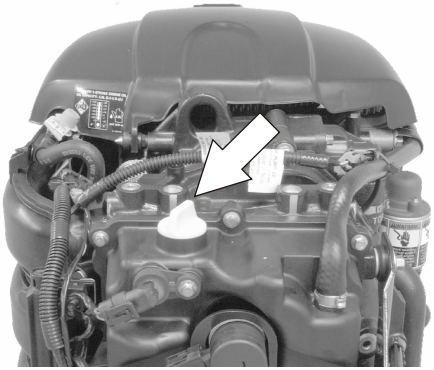

20714

Gearcase Lubrication

When adding or changing gearcase lubricant, visually check for the presence of water in the lubricant. If water is present, it may have settled to the bottom and will drain out prior to the lubricant, or it may be mixed with the lubricant, giving it a milky colored appearance. If water is noticed, have the gearcase checked by your dealer. Water in the lubricant may result in premature bearing failure or, in freezing temperatures, will turn to ice and damage the gearcase.

Examine the drained gearcase lubricant for metal particles. A small amount of metal particles indicates normal gear wear. An excessive amount of metal filings or larger particles (chips) may indicate abnormal gear wear and should be checked by an authorized dealer.

DRAINING GEARCASE

1. Place outboard in a vertical operating position.
2. Place a drain pan below outboard.
3. Remove vent plugs and fill/drain plug and drain lubricant.

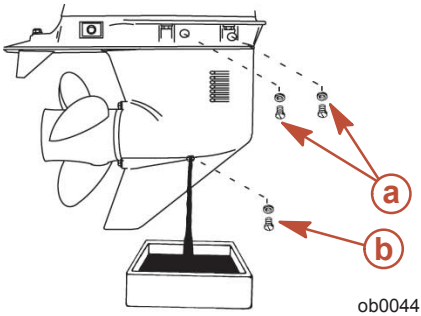

ob00441

a - Vent plugs **b -** Fill/drain plug

GEARCASE LUBRICANT CAPACITY

Gearcase lubricant capacity is approximately 666 ml (22.5 fl. oz.).

GEARCASE LUBRICANT RECOMMENDATION

Mercury or Quicksilver Premium or High Performance Gear Lubricant.

CHECKING LUBRICANT LEVEL AND FILLING GEARCASE

1. Place outboard in a vertical operating position.
2. Remove the front vent plug and rear vent plug.
3. Remove fill/drain plug. Place lubricant tube into the fill/drain plug hole and add lubricant until it appears at the front vent hole. At this time install the front vent plug and sealing washer.

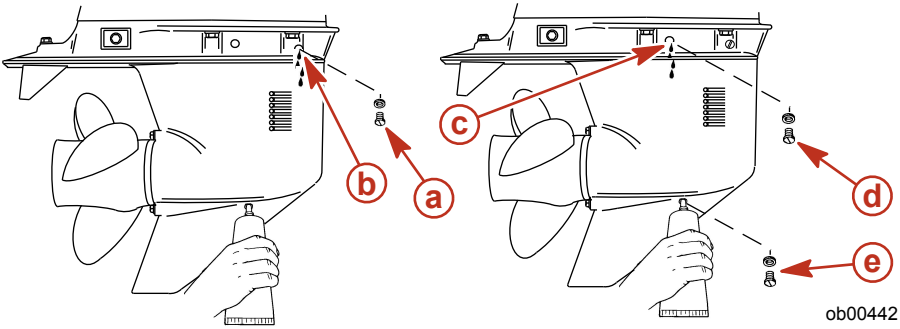

a - Front vent plug
b - Front vent hole
c - Rear vent hole
d - Rear vent plug
e - Fill/drain plug

4. Continue adding lubricant until it appears at the rear vent hole.
5. Stop adding lubricant. Install the rear vent plug and sealing washer before removing lubricant tube.
6. Remove lubricant tube and reinstall cleaned fill/drain plug and sealing washer.

SUBMERGED OUTBOARD

A submerged outboard will require service within a few hours by an authorized dealer once the outboard is recovered from the water. This immediate attention by a servicing dealer is necessary once the engine is exposed to the atmosphere to minimize internal corrosion damage to the engine.

STORAGE

Storage Preparation

The major consideration in preparing your outboard for storage is to protect it from rust, corrosion, and damage caused by freezing of trapped water.

The following storage procedures should be followed to prepare your outboard for out of season storage or prolonged storage (two months or longer).

⚠ CAUTION

Never start or operate your outboard (even momentarily) without water circulating through all the cooling water intake holes in the gearcase to prevent damage to the water pump (running dry) or overheating of the engine.

FUEL SYSTEM

IMPORTANT: Gasoline containing alcohol (ethanol or methanol) can cause a formation of acid during storage and can damage the fuel system. If the gasoline being used contains alcohol, it is advisable to drain as much of the remaining gasoline as possible from the fuel tank, remote fuel line, and engine fuel system.

IMPORTANT: This outboard is equipped with a closed fuel system when the engine is not running. With this closed system, fuel within the engine's fuel system, other than the fuel tank, will remain stable during normal storage periods without the addition of fuel treatment stabilizers.

Fill the fuel tank and engine fuel system with treated (stabilized) fuel to help prevent formation of varnish and gum. Proceed with the following instructions.

- Portable Fuel Tank - Pour the required amount of Fuel System Treatment and Stabilizer (follow instructions on container) into fuel tank. Tip fuel tank back and forth to mix stabilizer with the fuel.
- Permanently Installed Fuel Tank - Pour the required amount of Fuel System Treatment and Stabilizer (follow instructions on container) into a separate container and mix with approximately one liter (one quart) of gasoline. Pour this mixture into fuel tank.

Tube Ref No.	Description	Where Used	Part No.
124	Fuel System Treatment & Stabilizer	Fuel tank	802875Q1

Protecting External Outboard Components

- Touch up any paint nicks. See your dealer for touch-up paint.
- Spray Quicksilver or Mercury Precision Lubricants Corrosion Guard on external metal surfaces (except corrosion control anodes).

Tube Ref No.	Description	Where Used	Part No.
120	Corrosion Guard	External metal surfaces	92-802878Q55

Protecting Internal Engine Components

IMPORTANT: Refer to Maintenance - Spark Plug Inspection and Replacement for correct procedure for removing spark plugs.

- Remove pencil coils and spark plugs.
- Spray approximately 30 ml (1 fl. oz.) of Storage Seal Rust Inhibitor into each spark plug hole.

STORAGE

Tube Ref No.	Description	Where Used	Part No.
119	Storage Seal Rust Inhibitor	Spark plug holes	92-802878Q56

- Actuate key/push button start switch to crank the engine through one start cycle, which will distribute the storage seal throughout the cylinders.
- Reinstall spark plugs and pencil coils.

Gearcase

- Drain and refill the gearcase lubricant (refer to **Maintenance - Gearcase Lubrication**).

Positioning Outboard For Storage

Store outboard in an upright (vertical) position to allow water to drain out of outboard.

⚠ CAUTION

If outboard is stored tilted up in freezing temperature, trapped cooling water or rain water that may have entered the propeller exhaust outlet in the gearcase could freeze and cause damage to the outboard.

Battery Storage

- Follow the battery manufacturer's instructions for storage and recharging.
- Remove the battery from the boat and check water level. Recharge if necessary.
- Store the battery in a cool, dry place.
- Periodically check the water level and recharge the battery during storage.

TROUBLESHOOTING

Starter Motor Will Not Crank the Engine

POSSIBLE CAUSES

- Lanyard stop switch not in "RUN" position.
- Blown 15 AMP fuse. Check 14 pin remote control harness/cowl trim switch/main power relay fuse. Refer to **Maintenance** section.
- Outboard is not shifted to neutral position.
- Weak battery or battery connections are loose or corroded.
- Ignition key switch failure.
- Wiring or electrical connection faulty.
- Starter motor solenoid or slave solenoid failure.

Engine Will Not Start

POSSIBLE CAUSES

- Incorrect starting procedure. Refer to **Operation** section.
- Old or contaminated gasoline.
- Fuel is not reaching the engine.
  - Fuel tank is empty.
  - Fuel tank vent not open or restricted.
  - Fuel line is disconnected or kinked.
  - Fuel filter is obstructed. Refer to **Maintenance** section.
  - Fuel pump failure.
  - Fuel tank filter obstructed.
- Ignition system component failure.
- Spark plugs fouled or defective. Refer to **Maintenance** section.

Engine Runs Erratically

POSSIBLE CAUSES

- Overheating - Warning horn not working.
- Low oil pressure. Check oil level.
- Spark plugs fouled or defective. Refer to **Maintenance** section.
- Incorrect setup and adjustments.
- Fuel is being restricted to the engine.
  a. Engine fuel filter is obstructed. Refer to **Maintenance** section.
  b. Fuel tank filter obstructed.
  c. Stuck anti-siphon valve located on permanently built-in type fuel tanks.
  d. Fuel line is kinked or pinched.
- Fuel pump failure.
- Ignition system component failure.

Performance Loss

POSSIBLE CAUSES

- Overheating - Warning horn not working.
- Low oil pressure. Check oil level.
- Throttle not opening fully.

- Damaged propeller or improper propeller size.
- Incorrect engine timing, adjustment, or setup.
- Boat overloaded or load improperly distributed.
- Excessive water in bilge.
- Boat bottom is dirty or damaged.

Battery Will Not Hold Charge

POSSIBLE CAUSES

- Battery connections are loose or corroded.
- Low electrolyte level in battery.
- Worn out or inefficient battery.
- Excessive use of electrical accessories.
- Defective rectifier, alternator, or voltage regulator.
- Open circuit in the alternator output wire (fused link).

OWNER SERVICE ASSISTANCE

Local Repair Service

Always return your outboard to your local authorized dealer should the need for service arise. Only he has the factory trained mechanics, knowledge, special tools, equipment, and genuine parts and accessories to properly service your engine should the need occur. He knows your engine best.

Service Away From Home

If you are away from your local dealer and the need arises for service, contact the nearest authorized dealer. Refer to the Yellow Pages of the telephone directory. If, for any reason, you cannot obtain service, contact the nearest Mercury Marine Service Office.

Parts And Accessories Inquiries

All inquiries concerning genuine replacement parts and accessories should be directed to your local authorized dealer. The dealer has the necessary information to order parts and accessories for you. When inquiring on parts and accessories, the dealer requires the model and serial number to order the correct parts.

Service Assistance

Your satisfaction with your outboard product is very important to your dealer and to us. If you ever have a problem, question or concern about your outboard product, contact your dealer or any authorized Mercury Marine dealership. If additional assistance is required, take these steps.

1. Talk with the dealership's sales manager or service manager. If this has already been done, then contact the owner of the dealership.
2. Should you have a question, concern, or problem that cannot be resolved by your dealership, please contact Mercury Marine Service Office for assistance. Mercury Marine will work with you and your dealership to resolve all problems.

The following information will be needed by the service office:

- Your name and address
- Daytime telephone number
- Model and serial number of your outboard
- The name and address of your dealership
- Nature of problem

Mercury Marine Service Offices

For assistance, call, fax, or write. Please include your daytime telephone number with mail and fax correspondence.

United States		
Telephone	(920) 929-5040	Mercury Marine W6250 W. Pioneer Road P.O. Box 1939 Fond du Lac, WI 54936-1939
Fax	(920) 929-5893	
Website	www.mercurymarine.com	

Canada		
Telephone	(905) 567-6372	Mercury Marine Ltd. 2395 Meadowpine Blvd. Mississauga, Ontario L5N 7W6 Canada
Fax	(905) 567-8515	

OWNER SERVICE ASSISTANCE

Australia, Pacific		
Telephone	(61) (3) 9791-5822	Mercury Marine Australia 132-140 Frankston Road Dandenong, Victoria 3164 Australia
Fax	(61) (3) 9793-5880	

Europe, Middle East, Africa		
Telephone	(32) (87) 32 • 32 • 11	Marine Power - Europe, Inc. Parc Industriel de Petit-Rechain B-4800 Verviers, Belgium
Fax	(32) (87) 31 • 19 • 65	

Mexico, Central America, South America, Caribbean		
Telephone	(954) 744-3500	Mercury Marine 11650 Interchange Circle North Miramar, FL 33025 U.S.A.
Fax	(954) 744-3535	

Japan		
Telephone	81-053-423-2500	Mercury Marine - Japan Anshin-cho 283-1 Hamamatsu Shizuoka-ken, Japan 435-0005 Japan
Fax	81-053-423-2510	

Asia, Singapore		
Telephone	5466160	Mercury Marine Singapore 72 Loyang Way Singapore, 508762
Fax	5467789	

OUTBOARD INSTALLATION

Important Information

Rigging boats, which includes proper engine installation has become more complex over the years. As a result, Mercury Marine recommends that engines be installed only by Mercury authorized dealers. If you intend to disregard this recommendation, and install the engine yourself, please make sure to read and comply with these instructions. Failure to comply with these installation instructions could lead to serious injury or death.

NOTE: *Do not install an accessory electric fuel pump or a fuel line primer bulb into the fuel system of this engine.*

Boat Horsepower Capacity

⚠ WARNING

Using an outboard that exceeds the maximum horsepower limit of a boat can: 1) cause loss of boat control 2) place too much weight at the transom altering the designed flotation characteristics of the boat or 3) cause the boat to break apart particularly around the transom area. Overpowering a boat can result in serious injury, death or boat damage.

Do not overpower or overload your boat. Most boats will carry a required capacity plate indicating the maximum acceptable power and load as determined by the manufacturer following certain federal guidelines. If in doubt, contact your dealer or the boat manufacturer.

U.S. COAST GUARD CAPACITY	
MAXIMUM HORSEPOWER	XXX
MAXIMUM PERSON CAPACITY (POUNDS)	XXX
MAXIMUM WEIGHT CAPACITY	XXX

ob00306

Start in Gear Protection

⚠ WARNING

Avoid serious injury or death from a sudden unexpected acceleration when starting your engine. The design of this outboard requires that the remote control used with it must have a built in start in neutral only protection device.

The remote control connected to the outboard must be equipped with a start in neutral only protection device. This prevents the engine from starting in gear.

Selecting Accessories For Your Outboard

Genuine Mercury Precision or Quicksilver Accessories have been specifically designed and tested for this outboard.

Some accessories not manufactured or sold by Mercury Marine are not designed to be safely used with this outboard or outboard operating system. Acquire and read the installation, operation, and maintenance manuals for all selected accessories.

OUTBOARD INSTALLATION

Fuel Tanks

PORTABLE FUEL TANK

Select a suitable location in the boat within the engine fuel line length limitations and secure the tank in place.

PERMANENT FUEL TANK

Permanent fuel tanks should be installed in accordance with industry and federal safety standards, which include recommendations applicable to grounding, anti-siphon protection, ventilation, etc.

Filling the Fuel System

NOTE: *For initial start of a new engine or for an engine that ran out of fuel or was drained of fuel, the fuel system should be filled as follows:*
Turn the ignition key switch to the "ON" position for approximately one minute. This operates the fuel lift pump. Turn the ignition key switch back to the "OFF" position and then return the ignition key switch to the "ON" position again for an additional minute. Turn the ignition key switch back to the "OFF" position. The filling of the fuel system is complete.

Installation Specifications

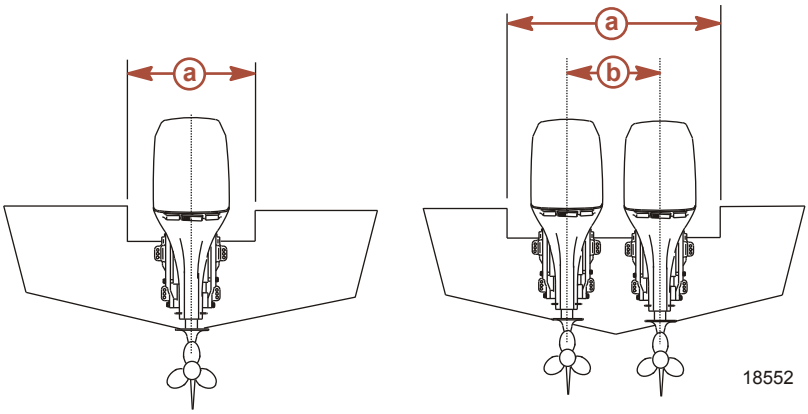

a - Minimum transom opening

b - Engine centerline for dual engine - 66.0 cm (26 in.)

Minimum Transom Opening	
Single engine	84.2 cm (33 in.)
Dual engine	149.9 cm (59 in.)

Lifting Outboard

1. Remove top cowl and engine flywheel cover.
2. Install the lifting base to the flywheel using three bolts. Tighten the bolts securely.
3. Thread the lifting eye into the lifting base.
4. Connect a hoist that has a minimum lift capacity of 450 kg (1000 lb.) to the lifting eye.
5. Lift the outboard and place it on the transom.

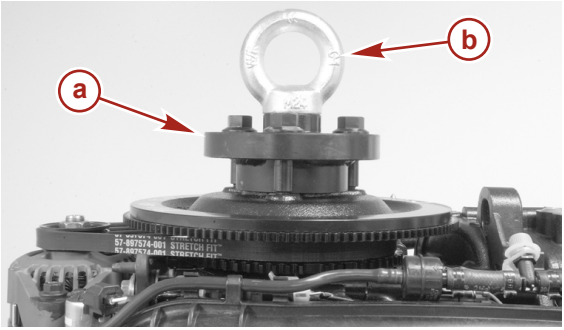

20854

a - Lifting base **b -** Lifting eye

Flywheel Puller/Lifting Ring	91-895343T02
14869	Removes flywheel from engine. Used for lifting powerhead/engine.

Steering Cable - Starboard Side Routed Cable

1. Lubricate O-ring seal and entire cable end.

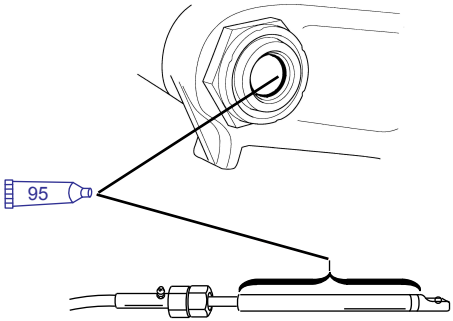

3724

Tube Ref No.	Description	Where Used	Part No.
95	2-4-C Marine Lubricant with Teflon	O-ring seal and entire cable end	92-802859Q1

2. Insert steering cable into tilt tube.

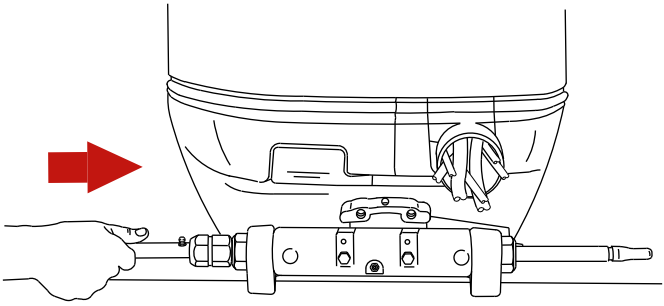

3725

3. Torque nut to specification.

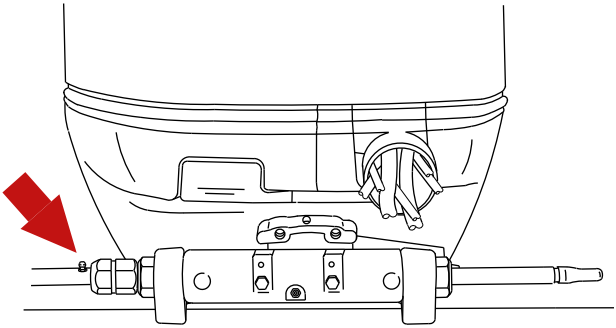

3727

Description	Nm	lb. in.	lb. ft.
Nut	47.5		35

Steering Link Rod Fasteners

IMPORTANT: The steering link rod that connects the steering cable to the engine must be fastened using special washer head bolt ("a" - Part Number 10-856680) and self-locking nylon insert locknuts ("c" & "d" - Part Number 11-826709113). These locknuts must never be replaced with common nuts (non-locking) as they will work loose and vibrate off, freeing the link rod to disengage.

⚠ WARNING

Disengagement of a steering link rod can result in the boat taking a full, sudden, sharp turn. This potentially violent action can cause occupants to be thrown overboard exposing them to serious injury or death.

OUTBOARD INSTALLATION

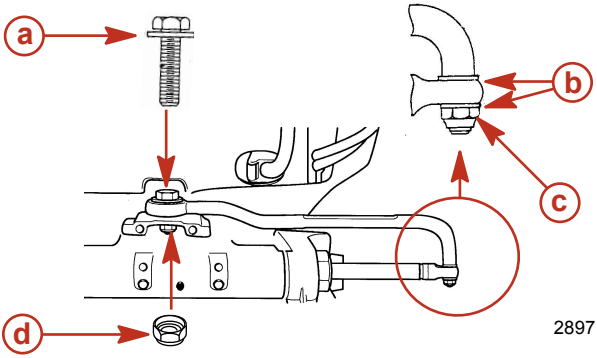

a - Special washer head bolt (10-856680)
b - Flat washers
c - Nylon insert locknut (11-826709113)
d - Nylon insert locknut (11-826709113)

Description	Nm	lb. in.	lb. ft.
Special washer head bolt	27		20
Nylon insert locknut "d"	27		20
Nylon insert locknut "c"	Tighten until it seats, then back off 1/4 turn		

Assemble steering link rod to steering cable with two flat washers and nylon insert locknut. Tighten locknut until it seats, then back nut off 1/4 turn.

Assemble steering link rod to engine with special washer head bolt and locknut. First torque special washer head bolt, then torque locknut to specifications.

OUTBOARD INSTALLATION

Determining Recommended Outboard Mounting Height

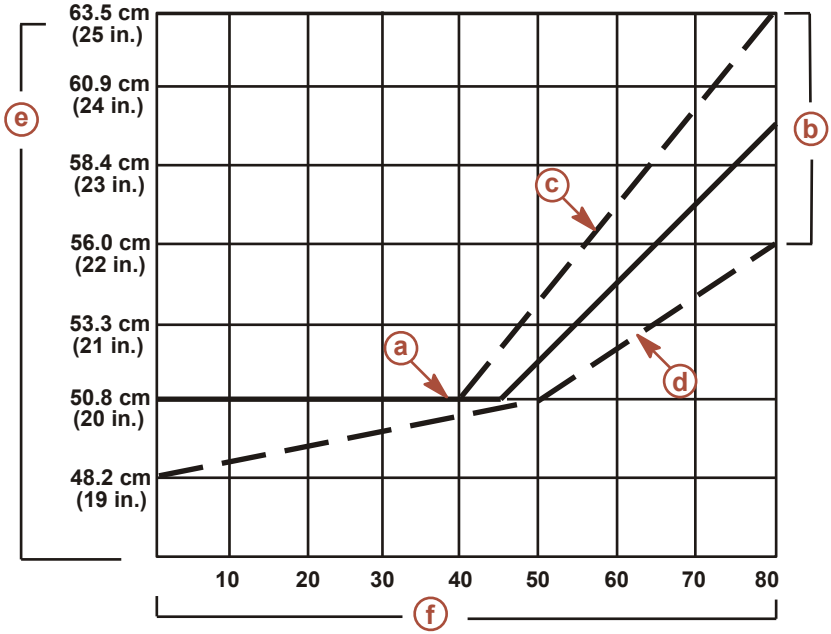

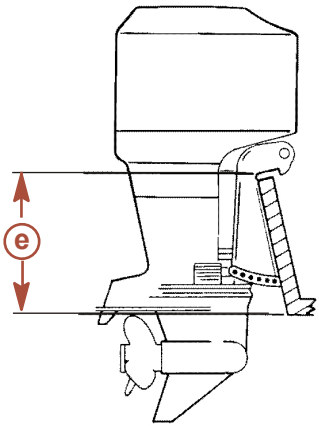

18562

a - The solid line is recommended to determine the outboard mounting height.

b - The broken lines represent the extremes of known successful outboard mounting height dimensions.

c - This line may be preferred to determine outboard mounting height dimension, if

d - This line may be preferred to determine outboard mounting height dimension for dual outboard installation.

e - Outboard mounting height (height of outboard mounting brackets from bottom of boat transom). For heights over

maximum speed is the only objective.

56.0 cm (22 in.), a propeller that is designed for surfacing operation is usually preferred.

f - Maximum boat speed (MPH) anticipated

NOTICE
1. The outboard should be mounted high enough on the transom so the exhaust relief hole will stay at least 25.4 mm (1 in.) above the waterline when the engine is running at idle speed. Having the exhaust relief hole above the waterline will prevent exhaust restrictions. Exhaust restrictions will result in poor performance at idle.
2. Add 12.7 cm (5 in.) for XL models to the listed outboard mounting heights.
3. The mounting height of the outboard must not exceed 63.5 cm (25 in.) for L models, 76 cm (30 in.) for XL models. Mounting the outboard higher may cause damage to the gearcase components.

Increasing the mounting height will usually:

- Reduce steering torque
- Increase top speed
- Increase boat stability
- Cause propeller to break loose during planing

Drilling Outboard Mounting Holes

IMPORTANT: Before drilling any mounting holes, carefully read Determining Recommended Outboard Mounting Height and install outboard to the nearest recommended mounting height.

1. Mark four mounting holes on the transom using the transom drilling fixture.

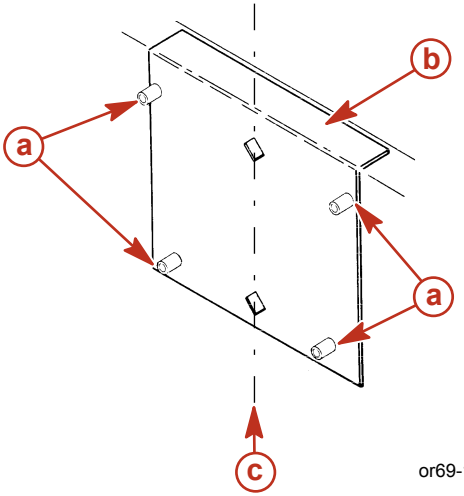

or69-1

a - Drill guide holes

b - Transom drilling fixture

c - Transom centerline

Transom Drilling Fixture	91-98234A2
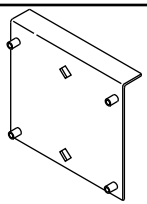 5489	Aids in engine installation by acting as a template for engine mounting holes.

2. Drill four 13.5 mm (17/32 in.) mounting holes.

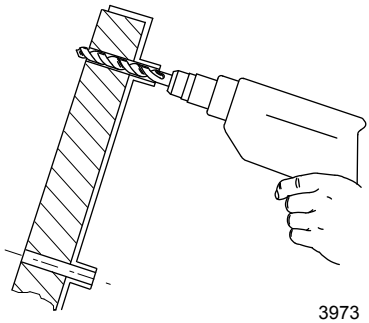

3973

Fastening the Outboard to the Transom

MOUNTING BOLTS

Outboard Transom Mounting Hardware - Supplied with Outboard		
Part Number	**Part Name**	**Description**
10-67755-1	Transom bolt	1/2-20 x 4.50 in. long (2.25 in. thread)
11-826711-17	Nylon insert locknut	1/2-20
12-28421	Washer - Inner	0.516 in. ID x 1.50 in. OD
12-54012	Washer - Outer	0.53 in. ID x 0.87 in. OD

Available Transom Mounting Bolts		
Part Number	**Part Name**	**Description**
10-67755005	Transom bolt	1/2-20 x 2.50 in. long (1.25 in. thread)
10-67755006	Transom bolt	1/2-20 x 3.50 in. long (1.25 in. thread)
10-814259	Transom bolt	1/2-20 x 4.00 in. long (2.25 in. thread)
10-67755-1	Transom bolt	1/2-20 x 4.50 in. long (2.25 in. thread)
10-67755-2	Transom bolt	1/2-20 x 6.50 in. long (2.75 in. thread)

OUTBOARD INSTALLATION

CHECKING BOAT TRANSOM CONSTRUCTION

IMPORTANT: Determine the strength of the boat transom. The outboard mounting locknuts and bolts should be able to hold 75 Nm (55 lb. ft.) of torque without the boat transom yielding or cracking. If the boat transom yields or cracks under this torque, the construction of the transom may not be adequate. The boat transom must be strengthened or the load carrying area increased.

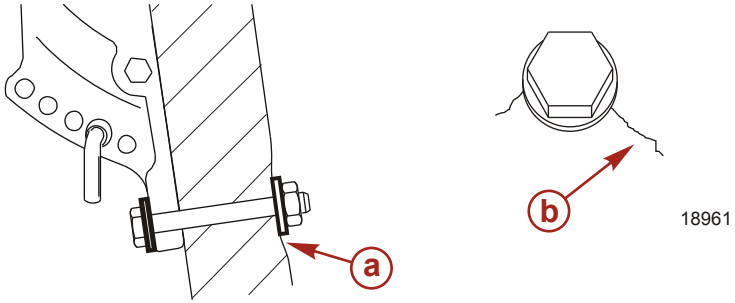

a - Transom yielding under bolt torque **b -** Transom cracking under bolt torque

When first determining transom strength, use a dial torque wrench. If the bolt or nut continues to turn without the torque reading on the dial increasing, it is an indication that the transom is yielding. The load area can be increased by using a larger washer or a transom reinforcement plate.

NOTE: *The inside holes on the transom reinforcement plate are for the lower transom bolts and the outside holes are for the upper transom bolts.*

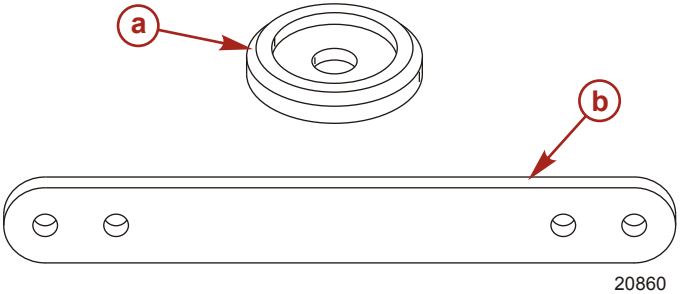

a - Large transom washer **b -** Transom reinforcement plate

Description	Part Number
Large transom washer	67-896392
Transom reinforcement plate	67-896305

1. Apply marine sealer to shanks of bolts, not the threads.
2. Fasten the outboard with the correct mounting hardware. Tighten locknuts to the specified torque.

NOTE: *For more accurate torque, whenever possible turn/tighten the mounting locknuts rather than turning the mounting bolts.*

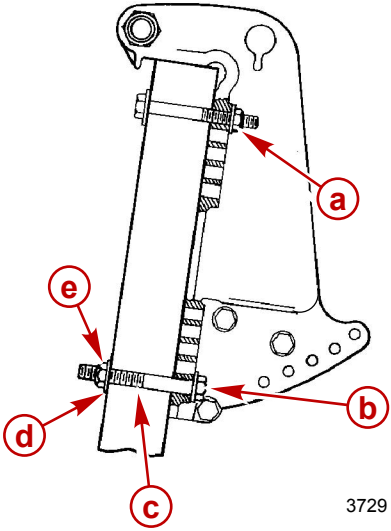

a - Flat washer (4)
b - 1/2 in. diameter bolt (4)
c - Shank of bolt
d - Locknut (4)
e - Flat washer (4)

Description	Nm	lb. in.	lb. ft.
Outboard mounting locknuts and bolts	75		55

Electrical, Fuel Hose, and Control Cables

FRONT COWL GROMMET

Installation

IMPORTANT: Sufficient slack must exist in wiring harnesses, battery cables, and hoses, that are routed between the rubber grommet and engine attachment points, to relieve stress and prevent hoses from being kinked or pinched.

1. Pull up the cowl seal. Remove the access cover from the bottom cowl.

OUTBOARD INSTALLATION

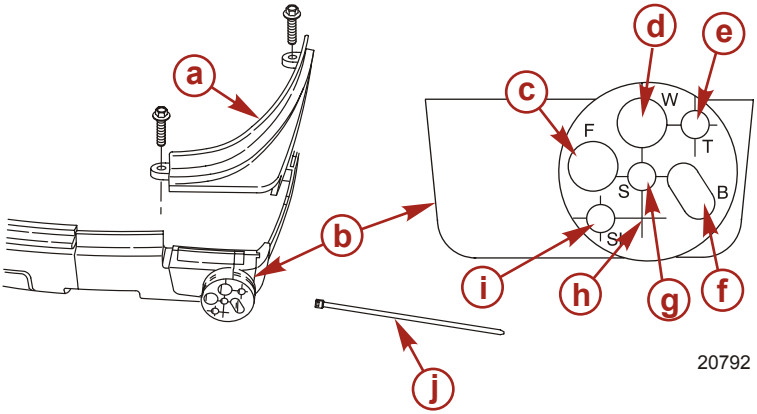

a - Access cover
b - Front grommet
c - Fuel hose opening
d - Remote wiring harness opening
e - Throttle cable opening
f - Battery cable opening
g - Speedometer tube opening
h - SmartCraft harness or additional harness opening
i - Shift cable opening
j - Cable tie

2. Route the hoses, wiring, and cables through the correct opening in the front grommet as shown.
3. Reinstall the access cover with two bolts. Reattach the cowl seal.
4. Attach a cable tie around the outside diameter of the front grommet.

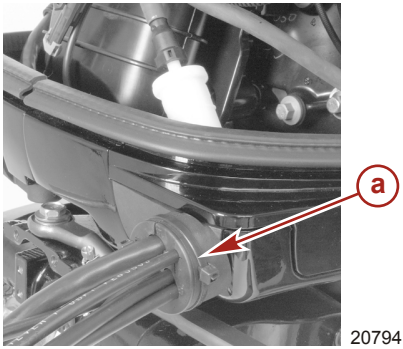

a - Cable tie

REMOTE WIRING HARNESS

Route the remote 14 pin boat harness through the front grommet. Connect the remote harness to the 14 pin connector on the engine harness.

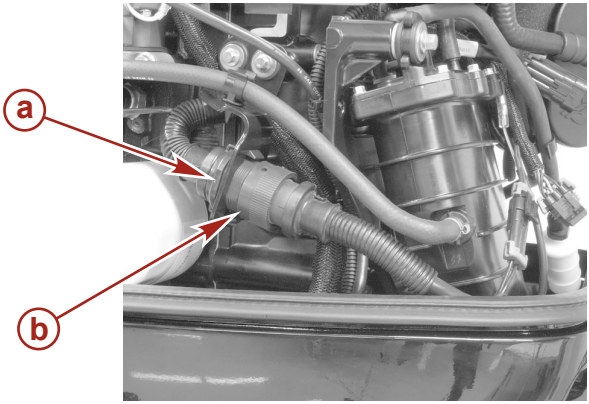

20791

a - 14 pin connector

b - Remote 14 pin boat harness

SMARTCRAFT HARNESS CONNECTION

If SmartCraft gauges are being used with the outboard, route the SmartCraft wiring harness through the front grommet and connect it to the SmartCraft harness connector on the engine.

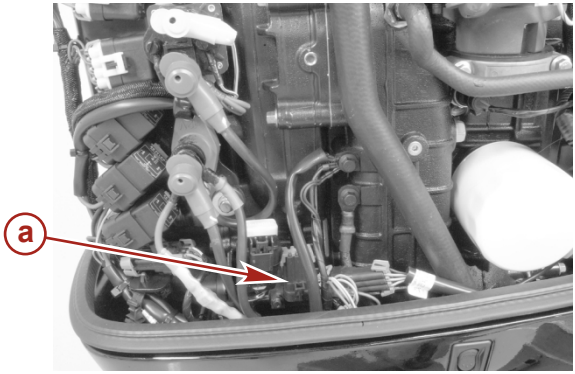

20895

a - SmartCraft harness connector

OUTBOARD INSTALLATION

BATTERY CABLE CONNECTIONS

Single Outboard

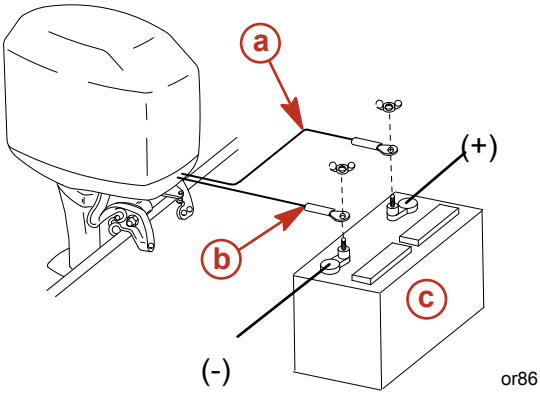

a - Red sleeve - positive (+)
b - Black sleeve - negative (–)
c - Cranking battery

Dual Outboards

Connect a common ground cable (wire size same as engine battery cables) between negative (–) terminals on starting batteries.

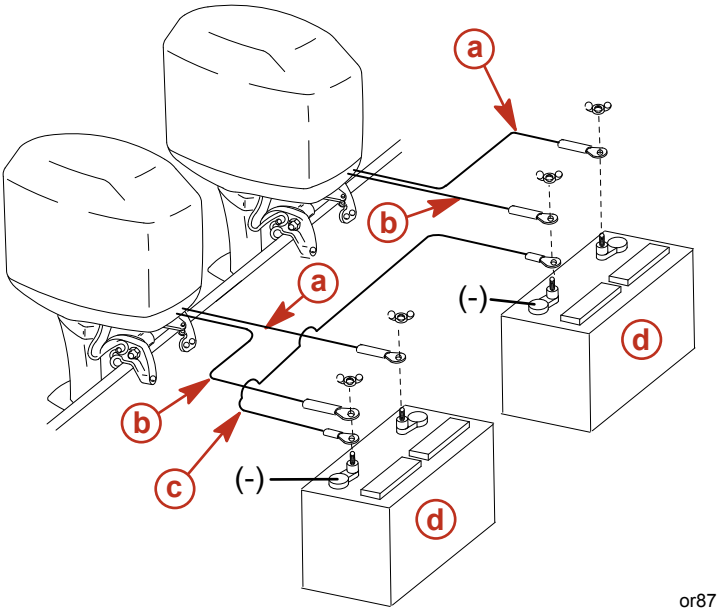

a - Red sleeve - positive (+)
b - Black sleeve - negative (–)
c - Ground cable
d - Cranking battery

FUEL HOSE CONNECTION

Fasten remote fuel hose to fitting with hose clamp.

Fuel Hose Size

Minimum fuel hose inside diameter (ID) is 8 mm (5/16 in.) with separate fuel hose/fuel tank pickup for each engine.

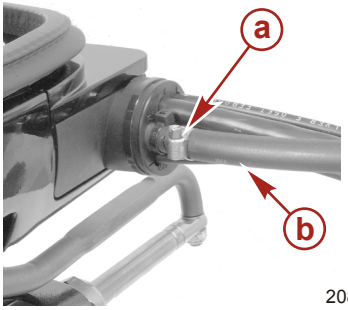

20804

a - Hose clamp

b - Fuel hose

SHIFT CABLE INSTALLATION

Install cables into the remote control following the instructions provided with the remote control.

NOTE: *Install the shift cable to the engine first. The shift cable is the first cable to move when the remote control handle is moved out of neutral.*

1. Remove the access cover from the bottom cowl.

NOTE: *The high pressure fuel hose can be moved out of the way for additional access.*

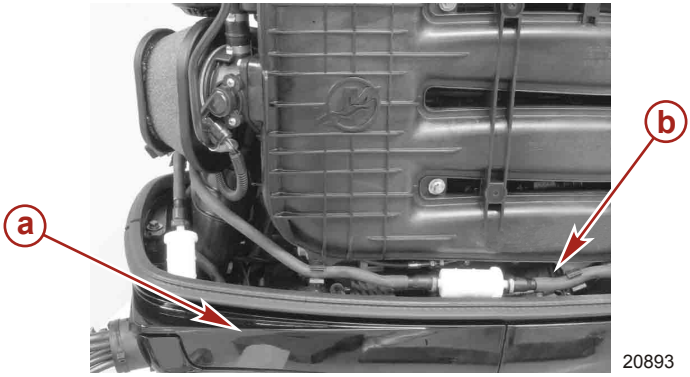

20893

a - Access cover

b - High pressure fuel hose

2. Position the shift mechanism into the neutral position.

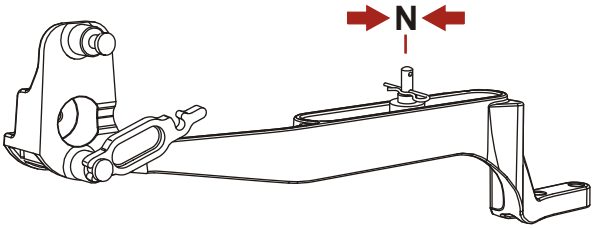

20820

3. Locate the center point of the slack or lost motion that exists in the shift cable as follows:
   a. Move the remote control handle from neutral into forward and advance the handle to full speed position. Slowly return the handle back to the neutral position. Place a mark "a" on the cable against the cable end guide.
   b. Move the remote control handle from neutral into reverse and advance the handle to full speed position. Slowly return the handle back to the neutral position. Place a mark "b" on the cable against the cable end guide.
   c. Make a center mark "c", midway between marks "a" and "b". Align the cable end guide against this center mark when installing the cable to the engine.

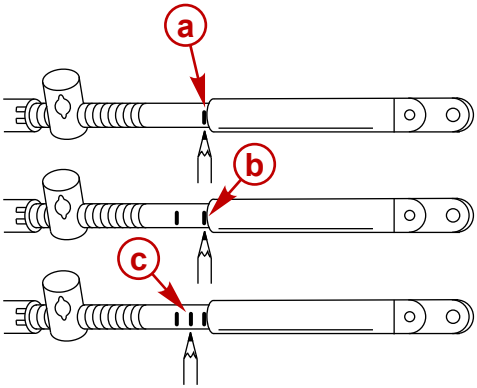

6098

4. Fit the shift cable through the front grommet.

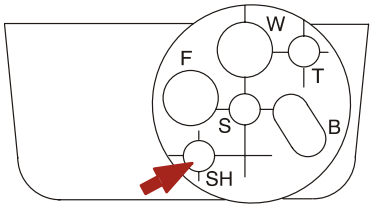

6099

5. Position remote control into neutral.
6. Align the shift cable end guide with the center mark made in **Step 3**. Place shift cable on anchor pin. Adjust cable barrel so it slips freely into the barrel insert.
7. Secure shift cable to the anchor pin with hairpin retainer.

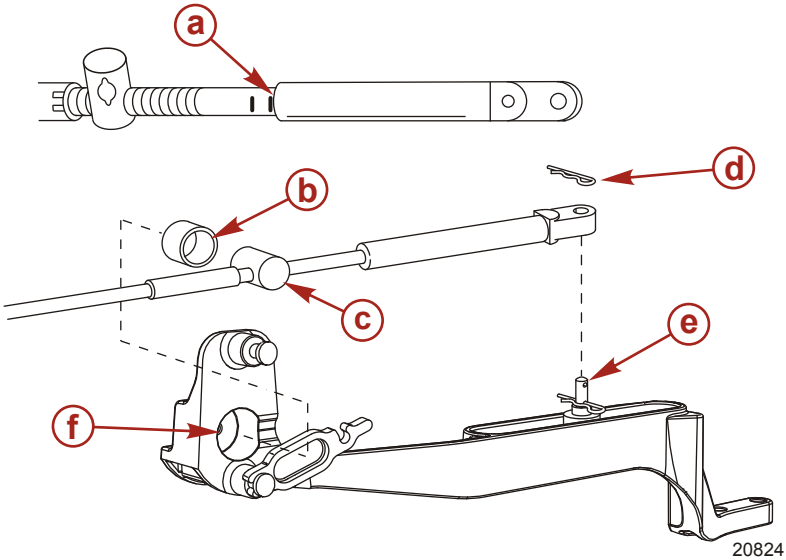

a - Center mark
b - Barrel insert
c - Cable barrel
d - Hairpin retainer
e - Anchor pin
f - Barrel holder

8. Lock barrel in place with cable latch.

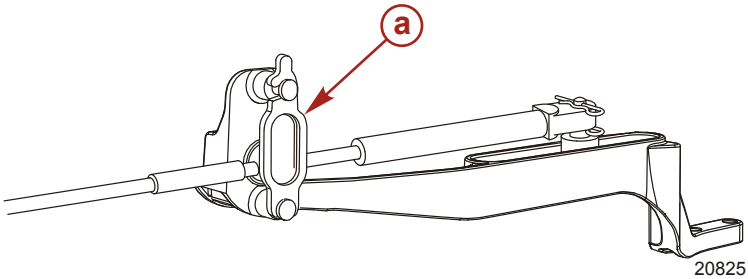

a - Cable latch

9. Check shift cable adjustments as follows:
   a. Shift remote control into forward. The propeller shaft should be locked in gear. If not, adjust the barrel closer to the cable end.
   b. Shift remote control into neutral. The propeller shaft should turn freely without drag. If not, adjust the barrel away from the cable end. **Repeat steps a and b**.
   c. Shift remote control into reverse while turning propeller. The propeller shaft should be locked in gear. If not, adjust the barrel away from the cable end. **Repeat steps a through c**.
   d. Shift remote control back to neutral. The propeller shaft should turn freely without drag. If not, adjust the barrel closer to the cable end. **Repeat steps a through d**.
10. If the throttle cable is already installed, place the high pressure fuel hose back into the hose retainers. Reinstall the access cover.

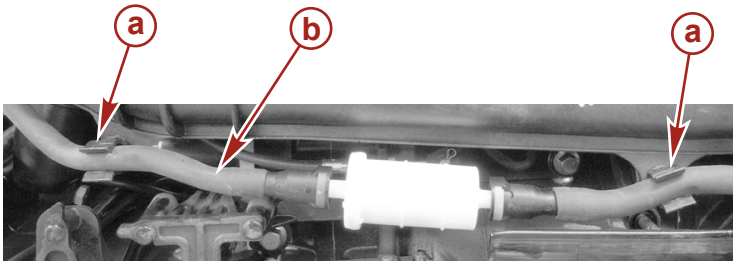

20905

a - Fuel hose retainer **b -** High pressure fuel hose

THROTTLE CABLE INSTALLATION

Install cables into the remote control following the instructions provided with the remote control.

1. Remove the access cover from the bottom cowl.

NOTE: *The high pressure fuel hose can be moved out of the way for additional access.*

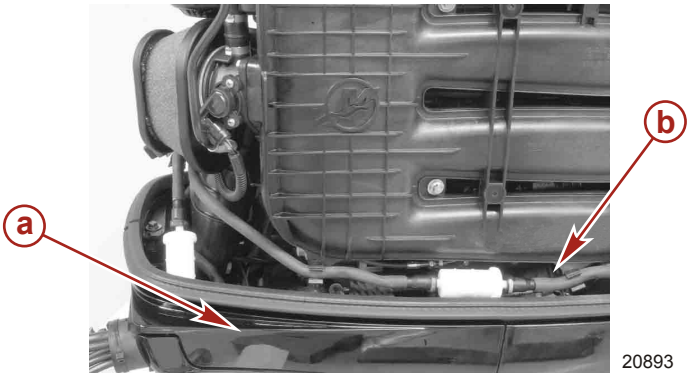

20893

a - Access cover **b -** High pressure fuel hose

2. Position remote control into neutral.

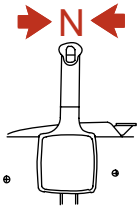

ob00351

3. Install the throttle cable to the throttle arm with the retainer clip.
4. Adjust the cable barrel so that the installed throttle cable will hold the throttle arm against the idle stop.
5. Fit the throttle cable through the front grommet.
6. Place cable barrel into barrel retainer.

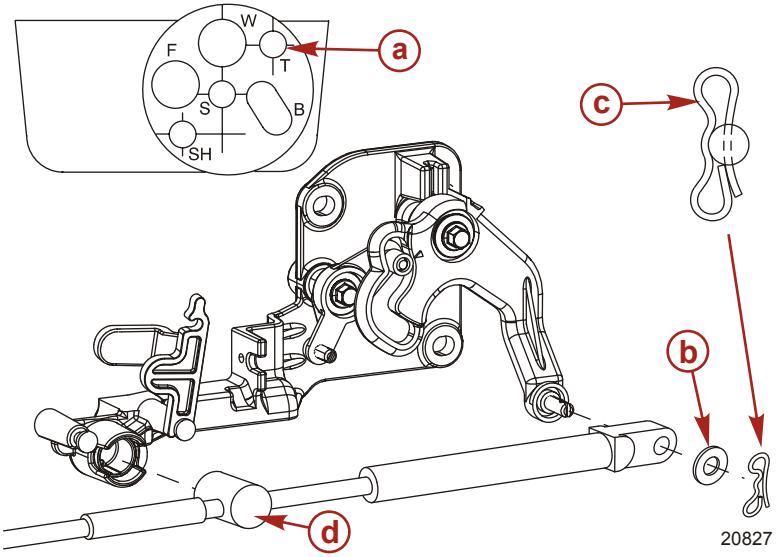

a - Throttle cable opening
b - Flat washer
c - Retainer clip
d - Cable barrel

7. Lock the cable in place with the cable latch.

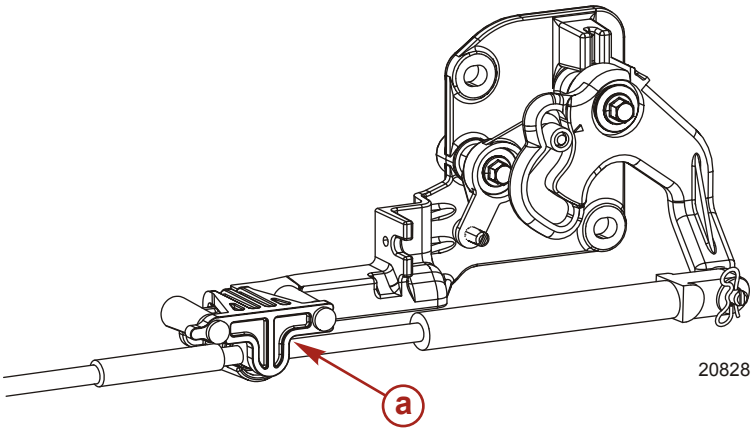

a - Cable latch

8. If the shift cable is already installed, place the high pressure fuel hose back into the hose retainers. Reinstall the access cover.

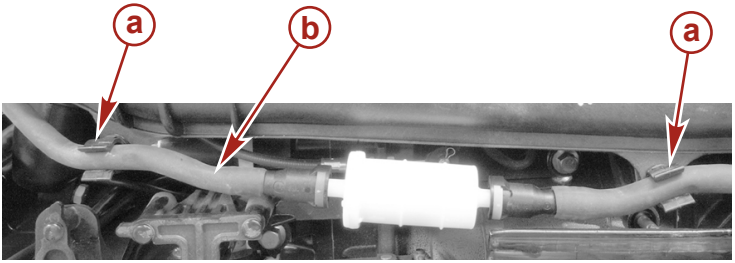

20905

a - Fuel hose retainer

b - High pressure fuel hose

Trim In Pin

⚠ WARNING

Avoid possible serious injury or death. Adjust outboard to an intermediate trim position as soon as boat is on plane to avoid possible ejection due to boat spin out. Do not attempt to turn boat when on plane if outboard is trimmed extremely in or down and there is a pull on the steering wheel.

Some boats, particularly some bass boats, are built with a greater than normal transom angle, which will allow the outboard to be trimmed further in or under. This greater trim under capability is desirable to improve acceleration, reduce the angle and time spent in a bow high boat during planing off, and in some cases, may be necessary to plane off a boat with aft live wells, given the variety of available propellers and height range of engine installations.

However, once on plane, the engine should be trimmed to a more intermediate position to avoid a bow-down planing condition called plowing. Plowing can cause bow steering or over steering and inefficiently consumes horsepower.

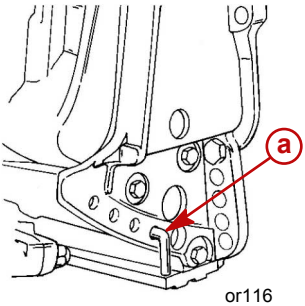

or116

a - Tilt pin (not included with engine)

Stainless Steel Tilt Pin	17-49930A 1
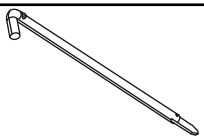 2749	Limits the down trim angle of the power trim equipped engines, or aids in determining the trim out angle on non-power trim engines.

The owner may decide to limit the trim in. This can be accomplished by purchasing a stainless steel tilt pin from your dealer and insert it in whatever adjustment hole in the transom brackets is desired. A non-stainless steel shipping bolt should not be used in this application other than on a temporary basis.