LOWER UNIT

Section 6B – Left Hand Non-Ratcheting

Table of Contents

Gear Housing Specifications (Counter Rotation) . . 6B-1
Special Tools 6B-2
Gear Housing (Drive Shaft)(Counter Rotation) . . . 6B-6
Gear Housing (Prop Shaft)(Counter Rotation) 6B-8
General Service Recommendations 6B-11
Removal, Disassembly, Cleaning and Inspection of Counter Rotation (Left Hand) Gear Housing 6B-12
- Water Pump 6B-15
- Bearing Carrier and Propeller Shaft 6B-17
- Shift Shaft 6B-19
- Propeller Shaft 6B-21
- Clutch Actuator Rod 6B-24
- Forward Gear and Bearing Adapter 6B-24
- Pinion Gear and Driveshaft 6B-26
- Reverse Gear 6B-28
- Gear Housing 6B-30

Reassembly and Installation of Counter Rotation Gear Housing 6B-31
- Driveshaft Needle Bearing 6B-31
- Bearing Carrier, Forward Gear and Bearing Adaptor 6B-32
- Reverse Gear Bearing Adaptor Assembly . . . 6B-35
- Driveshaft and Pinion Gear 6B-37
- Pinion Gear Depth 6B-39
- Reverse Gear 6B-41
- Forward Gear 6B-42
- Propeller Shaft/Forward Gear Bearing Adapter/Bearing Carrier 6B-45
- Water Pump 6B-52
- Gear Lubricant Filling Instructions 6B-55
- Installing Gear Housing to Driveshaft Housing 6B-55
- Propeller Installation 6B-57
- Speedometer Tube Installation 6B-58

Gear Housing Specifications (Counter Rotation)

Ratio	Pinion Depth	Forward Gear Backlash	Reverse Gear Backlash
1.87:1	0.025 in. (0.635 mm) With Tool 91-12349A2 using Disc #2 and Flat #7	0.018 in. to 0.027 in. (0.460 mm to 0.686 mm) Pointer on line mark #1	0.030 in. to 0.050 in. (0.762 mm to 1.27 mm)
2.0:1	0.025 in. (0.635 mm)With Tool 91-12349A2 using Disc #2 and Flat #7	0.015 in. to 0.022 in. (0.38 mm to 0.56 mm) Pointer on line mark #2	0.030 in. to 0.050 in. (0.762 mm to 1.27 mm)
Gearcase Lubricant Capacity			
All Ratios		22.5 fl. oz. (665.4 ml)	

Gear Ratio	Teeth on Pinion Gear	Teeth on Forward and Reverse Gear
1.87:1	15	28
2.00:1	12	24

Special Tools

1. Shift Shaft Bushing Tool 91-31107T

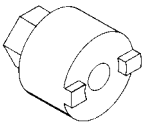

2. Gear Housing Cover Nut Tool 91-61069

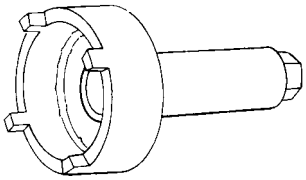

3. Bearing Carrier Removal Tool 91-46086A1 and Puller Bolt 91-85716

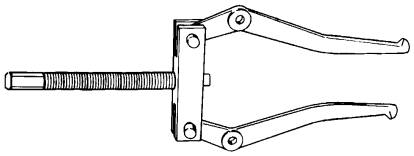

4. Slide Hammer Puller 91-34569A1

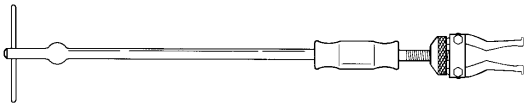

5. Bearing Removal and Installation Kit 91-31229A5. This kit contains the following tools: Pilot 91-36571; Puller Rod 91-31229; Nut 11-24156; Puller Plate 91-29310; Mandrel 91-38628; and Driver Rod 91-37323.

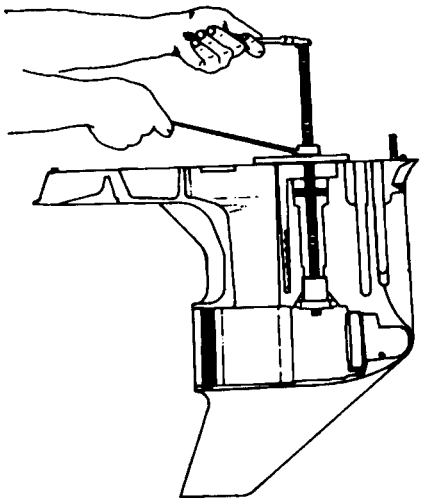

6. Pilot 91-36571

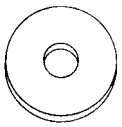

7. Puller Rod 91-31229 and Nut 91-24156

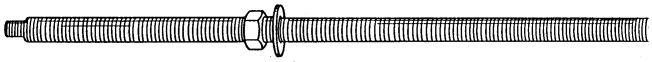

8. Puller Plate 91-29310

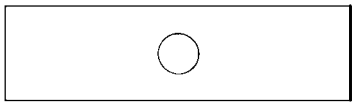

9. Mandrel 91-38628

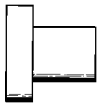

10. Driver Rod 91-37323

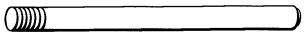

11. Universal Puller Plate 91-37241

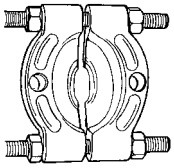

12. Driveshaft Holding Tool 91-34377A1 or91-90094

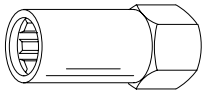

13. Oil Seal Driver 91-31108

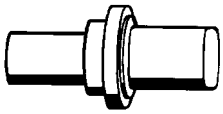

14. Forward Gear Bearing Tool 91-86943

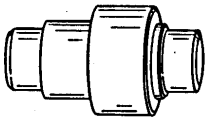

15. Pinion Locating Gear Tool 91-12349A2 or 91-74776

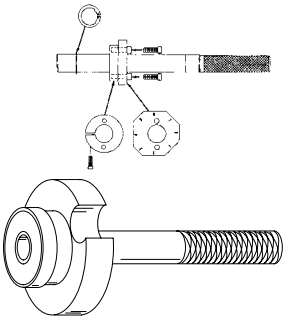

16. Backlash Indicator Rod 91-78473

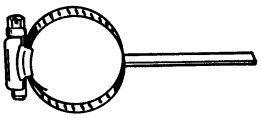

17. Dial Indicator 91-58222A1

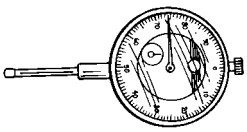

18. Bearing Retainer Tool 91-43506

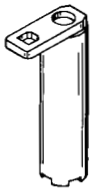

19. Mandrel 91-92788

20. Mandrel 91-15755

21. Dial Indicator Holder 91-89897

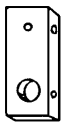

22. Bearing Preload Tool 91-14311A1

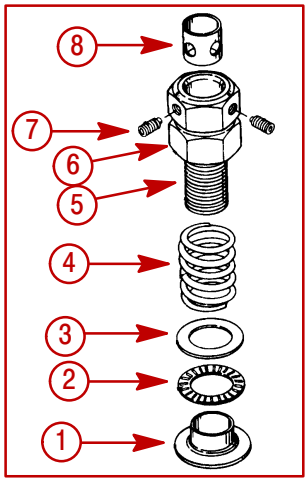

1 - Adaptor (N.S.S.)
2 - Bearing (N.S.S.)
3 - Washer (N.S.S.)
4 - Spring (24-14111)
5 - Bolt (10-12580)
6 - Nut (11-13953)
7 - Set Screw (10-12575)
8 - Sleeve (23-13946)

23. Propeller Shaft 44-93003 and Load Washer (i) 12-37429

24. Forward Gear Installation Tool 91-815850

25. Reverse Gear Installation Kit 91-18605A1 includes Pilot 91-18603; Retainer 91-18604; Shaft 91-18605 and Screw 10-18602

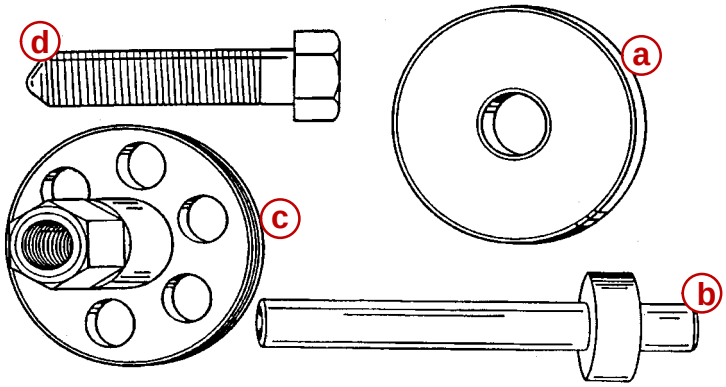

a -Pilot 91-18603
b -Shaft 91-18605
c -Retainer 91-18604
d -Screw 10-18602

Gear Housing (Drive Shaft)(Counter Rotation)

4.75 IN/120.65 MM TORPEDO DIA.

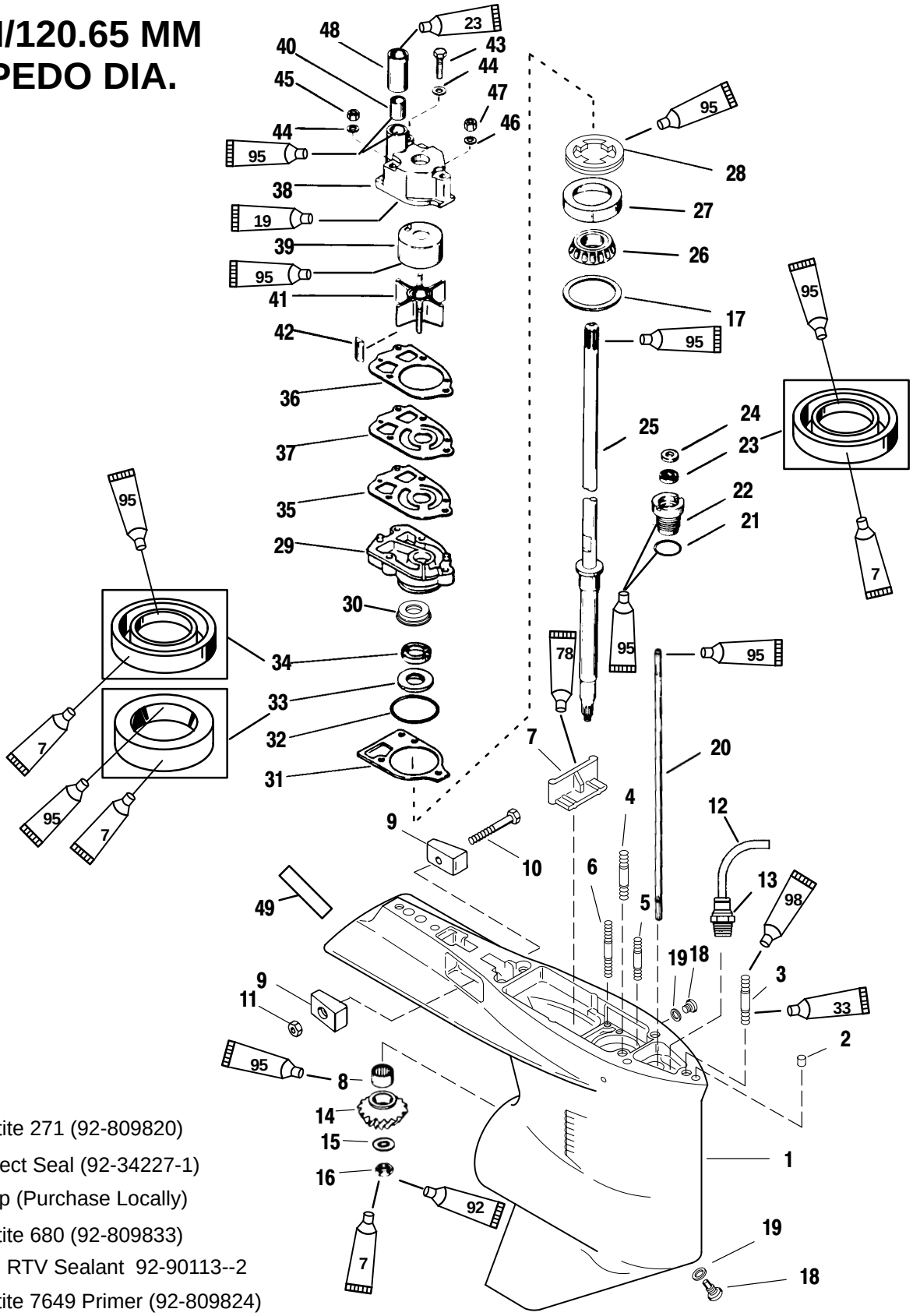

- 7 Loctite 271 (92-809820)
- 19 Perfect Seal (92-34227-1)
- 23 Soap (Purchase Locally)
- 33 Loctite 680 (92-809833)
- 78 G. E. RTV Sealant 92-90113--2
- 92 Loctite 7649 Primer (92-809824)
- 95 2-4-C With Teflon (92-825407A12)

Gear Housing (Drive Shaft)(Counter Rotation)

REF. NO.	QTY.	DESCRIPTION	TORQUE		
1	1	GEAR HOUSING **(BASIC)**			
2	2	DOWEL PIN			
3	1	STUD (3-11/16 IN.)			
4	2	STUD (2-1/16 IN.)			
5	1	STUD (3-3/8 IN.)			
6	2	STUD (3-1/8 IN.)			
7	1	FILLER BLOCK			
8	1	ROLLER BEARING			
9	2	ANODE			
10	1	SCREW			
11	1	NUT	60		7
12	1	HOSE (12 IN.)			
13	1	FITTING	50		5.5
14	1	PINION GEAR **(1.87:1 - 15 TEETH- 150)**			
	1	PINION GEAR **(2:1 - 14 TEETH - 135)**			
15	1	WASHER			
16	1	NUT		75	101
17	AR	SHIM (006 thru 048)			
18	2	SCREW–drain	60		7
19	2	WASHER			
20	1	SHIFT SHAFT			
21	1	O-RING			
22	1	BUSHING ASSEMBLY		50	68
23	1	OIL SEAL			
24	1	WASHER–rubber			
25	1	DRIVE SHAFT			
26	1	ROLLER BEARING			
27	1	CUP			
28	1	RETAINER		100	135
29	1	WATER PUMP BASE			
30	1	RETAINER			
31	1	GASKET			
32	1	O-RING			
33	1	OIL SEAL			
34	1	OIL SEAL			
35	1	GASKET–lower			
36	1	GASKET–upper			
37	1	FACE PLATE			
38	1	WATER PUMP BODY ASSEMBLY			
39	1	INSERT			
40	1	SEAL–rubber			
41	1	IMPELLER			
42	1	KEY			
43	1	SCREW (#14-8 x 2-1/4 IN.)	35		4
44	2	WASHER			
45	2	NUT	50		5.5
46	1	WASHER			
47	1	NUT	50		5.5
48	1	SLEEVE			
49	1	DECAL-Counter Rotation			

Gear Housing (Prop Shaft)(Counter Rotation)

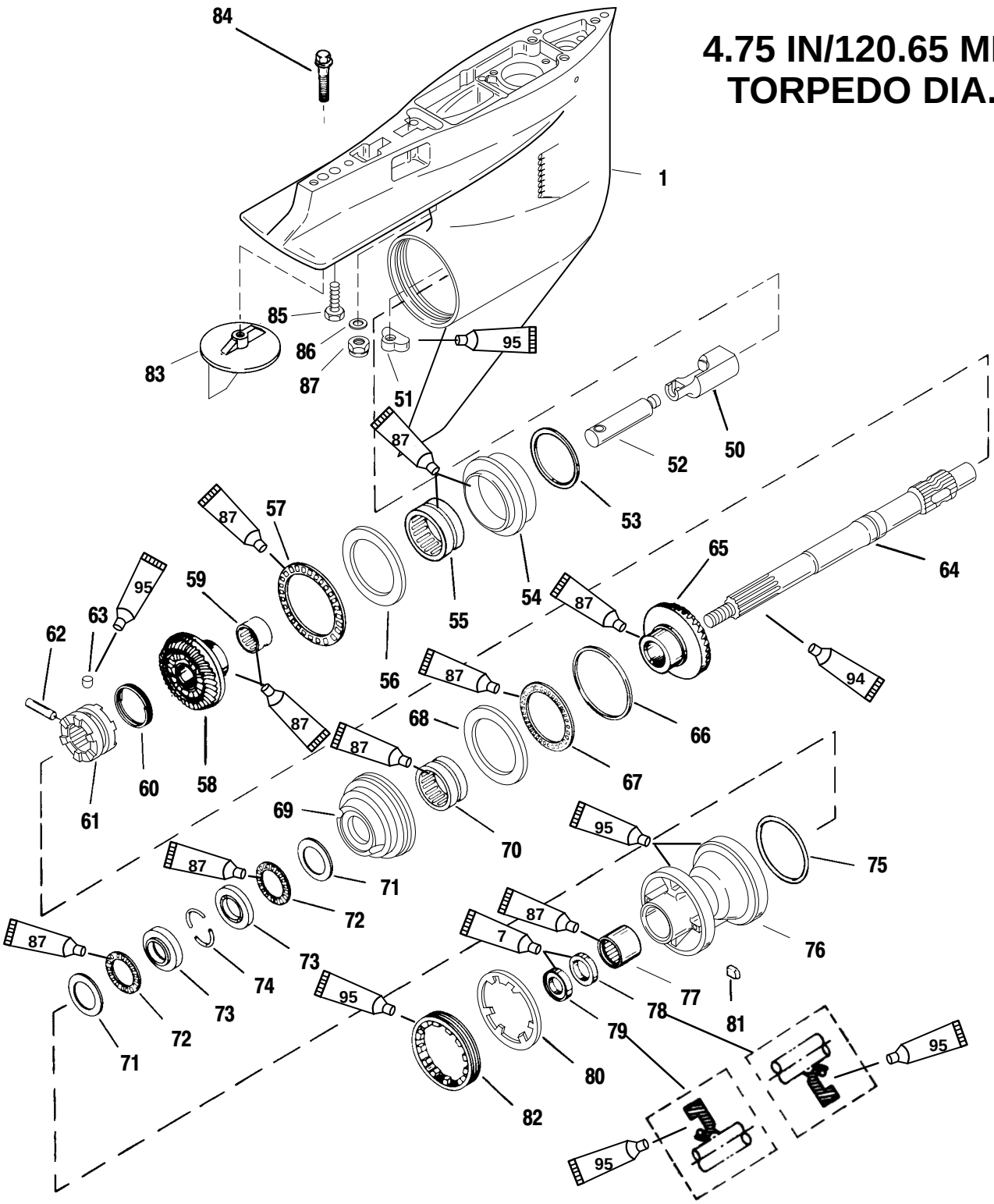

7 Loctite 271 (92-809820)	94 Anti-Corrosion Grease (92-78376A6)
87 Quicksilver Gear Lubricant (92-802844A1)	95 2-4-C With Teflon (92-825407A12)

Gear Housing (Prop Shaft)(Counter Rotation)

REF. NO.	QTY.	DESCRIPTION	TORQUE		
			lb-in	lb-ft	Nm.
1	1	GEAR HOUSING **(BLACK)(BASIC)**			
50	1	CAM FOLLOWER			
51	1	SHIFT CAM			
52	1	ROD			
53	AR	SHIM SET			
54	1	BEARING ADAPTOR ASSEMBLY			
55	1	ROLLER BEARING			
56	1	THRUST WASHER			
57	1	THRUST BEARING			
58	1	REVERSE GEAR **(1.87:1 – 15/28)(150)**			
	1	REVERSE GEAR **(2:1 – 14/28)-(135)**			
59	1	ROLLER BEARING			
60	1	SPRING			
61	1	SLIDING CLUTCH			
62	1	CROSS PIN			
63	1	DETENT PIN			
64	1	PROPELLER SHAFT			
65	1	FORWARD GEAR **(1.87:1 – 15/28)(150)**			
	1	FORWARD GEAR **(2:1 – 14/28)-(135)**			
66	AR	SPACER SHIM .206 IN.			
	AR	SPACER SHIM .208 IN.			
	AR	SPACER SHIM .210 IN.			
	AR	SPACER SHIM .212 IN.			
	AR	SPACER SHIM .214 IN.			
	AR	SPACER SHIM .216 IN.			
	AR	SPACER SHIM .218 IN.			
	AR	SPACER SHIM .220 IN.			
	AR	SPACER SHIM .222 IN.			
	AR	SPACER SHIM .224 IN.			
	AR	SPACER SHIM .226 IN.			
	AR	SPACER SHIM .228 IN.			
	AR	SPACER SHIM .230 IN.			

Gear Housing (Prop Shaft)(Counter Rotation)

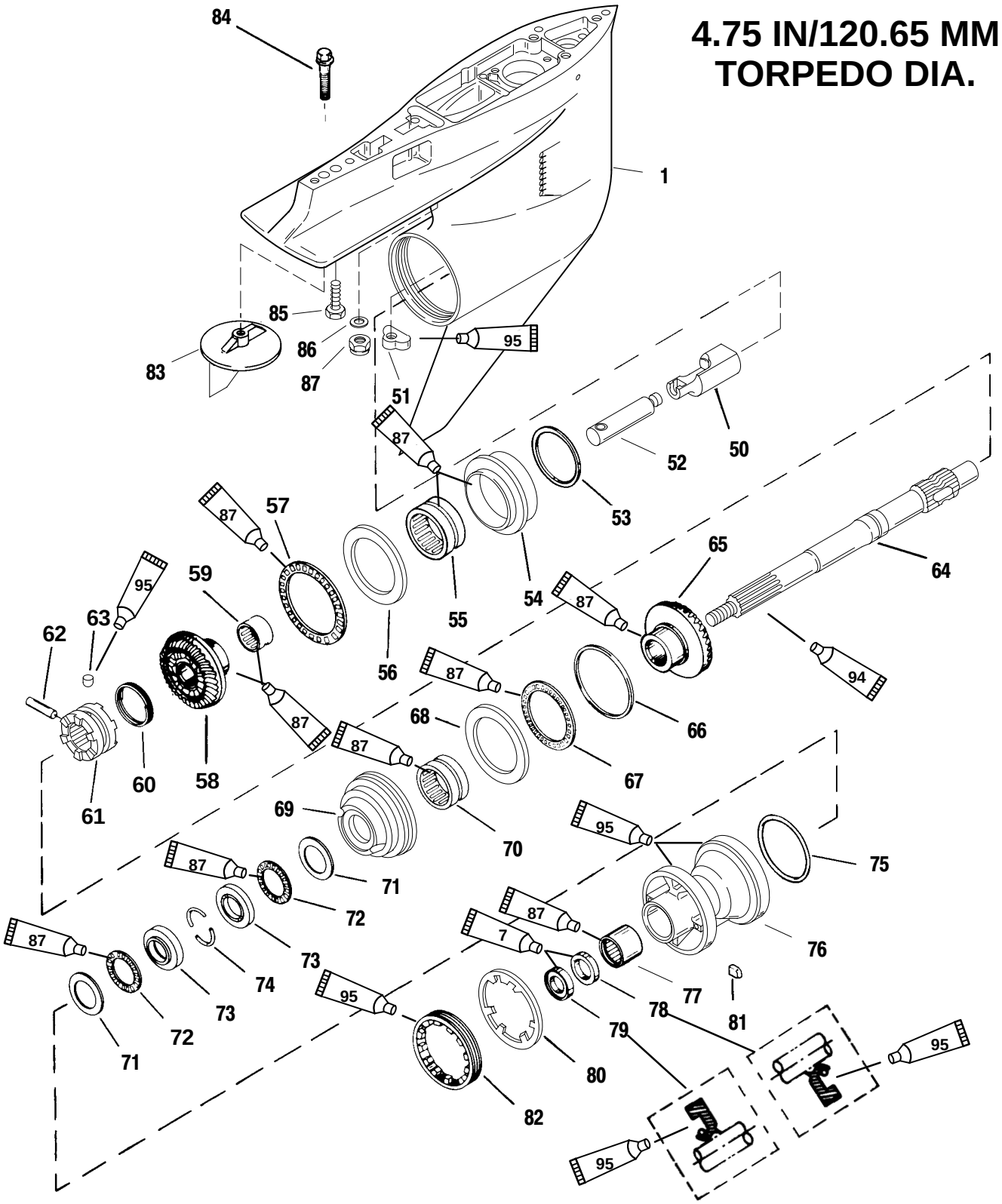

7 Loctite 271 (92-809820)

87 Quicksilver Gear Lubricant (92-802844A1)

94 Anti-Corrosion Grease (92-78376A6)

95 2-4-C With Teflon (92-825407A12)

Gear Housing (Prop Shaft)(Counter Rotation)

REF. NO.	QTY.	DESCRIPTION	TORQUE		
			lb-in	lb-ft	Nm.
1	1	GEAR HOUSING **(BLACK)(BASIC)**			
67	1	ROLLER BEARING			
68	1	THRUST WASHER			
69	1	BEARING ADAPTOR ASSEMBLY			
70	1	ROLLER BEARING			
71	2	THRUST WASHER			
72	2	THRUST BEARING			
73	2	THRUST RACE			
74	2	KEEPER			
75	1	O RING			
76	1	BEARING CARRIER ASSEMBLY			
77	1	ROLLER BEARING			
78	1	OIL SEAL (INSIDE)			
79	1	OIL SEAL (OUTSIDE)			
80	1	TAB WASHER			
81	1	KEY			
82	1	COVER		210	285
83	1	TRIM TAB			
84	1	SCREW (1-3/4 IN.)		25	34
85	1	SCREW (3/8-16 x 1)		30	41
86	2	WASHER			
87	2	NUT		50	68

General Service Recommendations

There may be more than one way to “disassemble” or “reassemble” a particular part(s), therefore, it is recommended that the entire procedure be read prior to repair.

IMPORTANT: Read the following before attempting any repairs.

In many cases, disassembly of a sub-assembly may not be necessary until cleaning and inspection reveals that disassembly is required for replacement of one or more components.

Service procedure order in this section is a normal disassembly-reassembly sequence. It is suggested that the sequence be followed without deviation to assure proper repairs. When performing partial repairs, follow the instructions to the point where the desired component can be replaced, then proceed to “reassembly and installation” of that component in the reassembly part of this section. Use the “Index” (on back of section divider) to find correct page number.

Threaded parts are right hand (RH), unless otherwise indicated.

When holding, pressing or driving is required, use soft metal vise jaw protectors or wood for protection of parts. Use a suitable mandrel (one that will contact only the bearing race) when pressing or driving bearings.

Whenever compressed air is used to dry a part, verify that no water is present in air line.

BEARINGS

Upon disassembly of gear housing, all bearings must be cleaned and inspected. Clean bearings with solvent and dry with compressed air. Air should be directed at the bearing so that it passes thru the bearing. DO NOT spin bearing with compressed air, as this may cause bearing to score from lack of lubrication. After cleaning, lubricate bearings with Quicksilver Gear Lubricant. DO NOT lubricate tapered bearing cups until after inspection.

Inspect all bearings for roughness, catches and bearing race side wear. Work inner bearing race in-and-out, while holding outer race, to check for side wear. When inspecting tapered bearings, determine condition of rollers and inner bearing race by inspecting bearing cup for pitting, scoring, grooves, uneven wear, imbedded particles and/or discoloration from over-heating. Always replace tapered bearing and race as a set.

Roller bearing condition is determined by inspecting the bearing surface of the shaft that the roller bearing supports. Check shaft surface for pitting, scoring, grooving, imbedded particles, uneven wear and/or discoloration from overheating. The shaft and bearing must be replaced, if the conditions described are found.

SHIMS

Keep a record of all shim amounts and location during disassembly to aid in reassembly. Be sure to follow shimming instructions during reassembly, as gears must be installed to correct depth and have the correct amount of backlash to avoid noisy operation and premature gear failure.

SEALS

As a normal procedure, all O-rings and oil seals SHOULD BE REPLACED without regard to appearance. To prevent leakage around oil seals, apply Loctite 271 to outer diameter of all metal case oil seals. When using Loctite on seals or threads, surfaces must be clean and dry. To ease installation, apply 2-4-C w/Teflon Marine Lubricant on all O-rings. To prevent wear, apply 2-4-C w/Teflon Marine Lubricant on I.D. of oil seals. To prevent corrosion damage after reassembly, apply Quicksilver 2-4-C w/Teflon to external surfaces of bearing carrier and cover nut threads prior to installation.

Removal, Disassembly, Cleaning and Inspection of Counter Rotation (Left Hand) Gear Housing

REMOVAL

⚠ WARNING

Disconnect high tension leads from spark plugs and remove spark plugs from engine before removing gear housing from driveshaft housing.

1. Disconnect high tension leads from spark plugs and remove spark plugs from engine.

⚠ CAUTION

Gear housing MUST BE in NEUTRAL position and shift shaft MUST BE removed from gear housing BEFORE propeller shaft can be removed from gear housing.

2. Shift engine into NEUTRAL position.
3. Tilt engine to full up position and engage tilt lock lever.
4. Bend tabs of propeller tab washer away from thrust hub (rear), then remove propeller locknut, tab washer, thrust hub (rear), propeller and thrust hub (forward) from propeller shaft.

5. Mark gear housing and trim tab so that trim tab can be reinstalled in the same position. Remove plastic cap at rear edge of driveshaft housing. Remove bolt that secures trim tab and remove tab from gear housing.
6. Once trim tab is removed, remove bolt from inside of trim tab cavity.
7. Remove 2 locknuts from bottom middle of anti-cavitation plate.

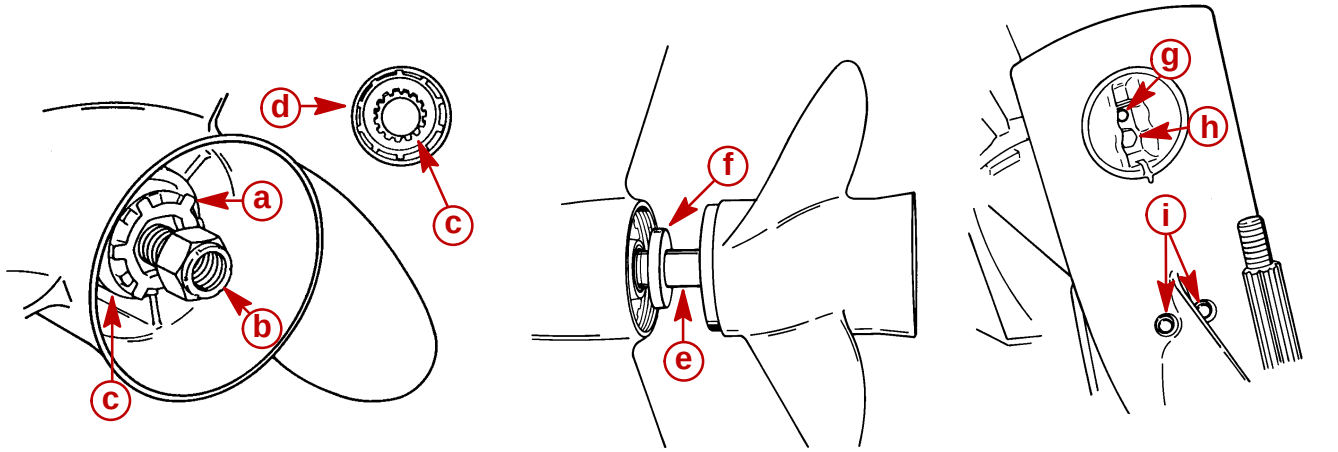

51916 51912 51866

a -Tab Washer
b -Propeller Nut
c -Rear Thrust Hub
d -Continuity Washer (if equipped)
e -Propeller Shaft
f -Thrust Hub (forward)
g -Bolt (secures trim tab)
h -Bolt (inside trim tab cavity)
i -Locknuts and Washers

8. While pressing in on speedometer hose junction, pull out on hose to disconnect.

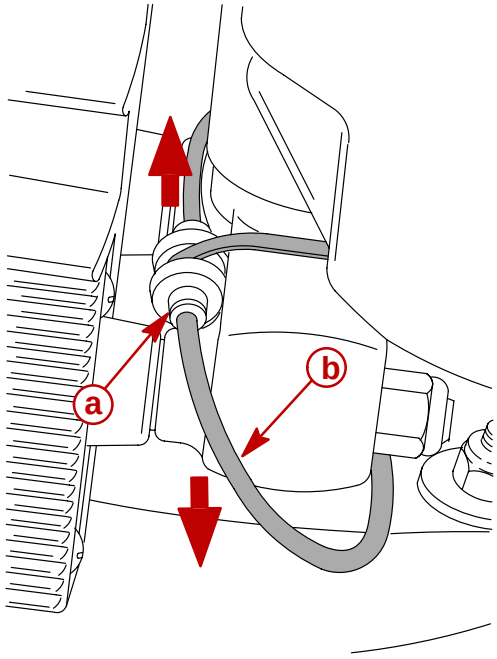

57735

a -Press in on Junction
b -Pull out on Hose

9. Remove locknut from the front gear housing mounting stud.
10. Loosen the side mounting locknuts. (DO NOT attempt to remove one nut before opposite side is loosened sufficiently, or driveshaft housing could be damaged.)

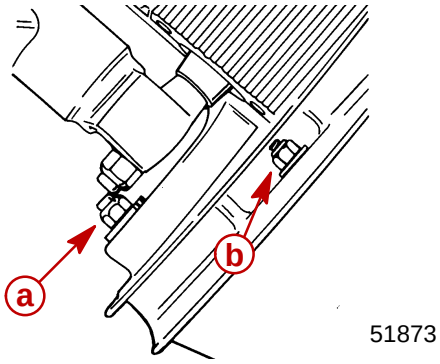

a -Front Mounting Locknut
b -Side Mounting Locknut (One Each Side)

11. Pull gear housing away from driveshaft housing as far as the loosened nuts (in Step 9) will allow, then remove loosened nuts. (DO NOT allow gear housing to fall, as it now is free.)
12. Pull gear housing from driveshaft housing.

DRAINING AND INSPECTING GEAR HOUSING LUBRICANT

1. Place gear housing in a suitable holding fixture or vise with the driveshaft in a vertical position, as shown.

NOTE: *Drain and Fill screws may be located on the starboard side of gearcase on later models.*

2. Position a clean drain pan under gear housing and remove “Fill” and “Vent” screws from gear housing.
3. Inspect gear lubricant for metal particles. Presence of a small amount of fine metal particles (resembling powder) indicates normal wear. Presence of larger particles (or a large quantity of fine particles) indicates need for gear housing disassembly, and component inspection.
4. Note the color of gear lubricant. White or cream color indicates presence of water in lubricant. Check drain pan for water separation from lubricant. Presence of water in gear lubricant indicates the need for disassembly, and inspection of oil seals, seal surfaces, O-rings and gear housing components.

IMPORTANT: Gear lubricant drained from a recently run gear case will be a light chocolate brown in color due to agitation/aeration. Oil which is stabilized will be a clear yellow brown in color.

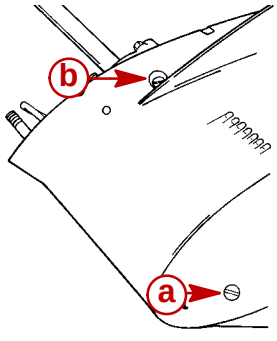

a -Fill Screw
b -Vent Screw

Water Pump

CLEANING AND INSPECTION

1. Clean all water pump parts with solvent and dry with compressed air.
2. Inspect water pump cover and base for cracks and distortion (from overheating).
3. Inspect face plate and water pump insert for grooves and/or rough surfaces.

IMPORTANT: When completing gear housing repairs, that require removal of water pump impeller, it is recommended that the impeller be replaced. If it is necessary, however, to re-use impeller, DO NOT install in reverse to original rotation, or premature impeller failure will occur.

4. Inspect impeller side seal surfaces and ends of impeller blades for cracks, tears and wear. Replace impeller if any of these conditions are found.
5. Inspect impeller bonding to impeller hub.
6. Inspect impeller for glazed or melted appearance (caused by operation without sufficient water supply). Replace impeller if any of these conditions exist.

IMPORTANT: It is recommended that all seals and gaskets be replaced (as a normal repair procedure) to assure effective repair.

REMOVAL AND DISASSEMBLY

1. Slide rubber centrifugal slinger up and off driveshaft.
2. Remove water tube guide and seal from water pump cover. (Retain guide for reassembly and discard seal.)
3. Remove (and retain) 3 nuts, one bolt and all washers which secure water pump cover to gear housing.
4. Using 2 pry bars, lift water pump cover up and off driveshaft.

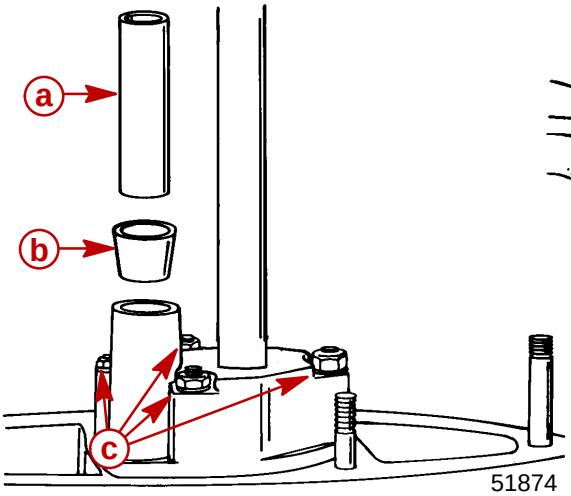

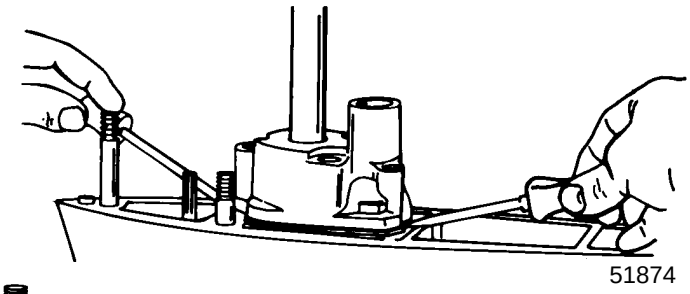

a -Water Tube Guide
b -Water Tube Seal
c -Nuts, Bolt and Washers to be Removed

5. Inspect water pump cover and insert, as outlined in “Cleaning and Inspection,” previous.
6. If inspection of water pump insert determines that replacement is required, follow Step “a” or “b” (immediately following) to remove insert from water pump cover.

NOTE: *Try Step "a" first. If insert cannot be removed with Step "a," use Step "b."*

a. Drive water pump insert out of water pump cover with a punch and hammer.

b. Drill two 3/16 in. (4.8 mm) diameter holes thru the top of water pump cover (but not thru insert). Drive insert out of cover with a punch and hammer.

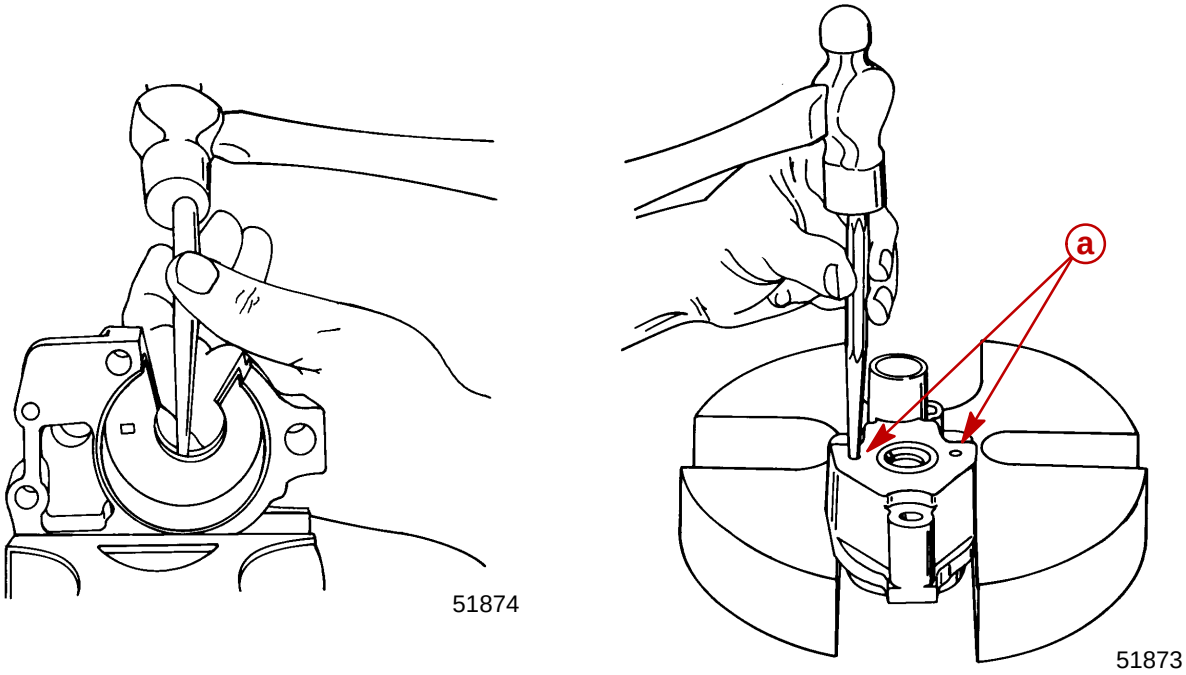

a -Drill Two Holes at These Locations

7. Remove impeller from driveshaft. (It may be necessary to use a punch and hammer to drive impeller upward on driveshaft. In extreme cases, it may be necessary to split hub of impeller with a hammer and chisel.)
8. Once impeller is removed, remove impeller drive key from driveshaft.
9. Remove water pump face plate and both gaskets (one above and below face plate) from water pump base.
10. Using 2 pry bars, positioned and padded as shown, lift water pump base up and off driveshaft.

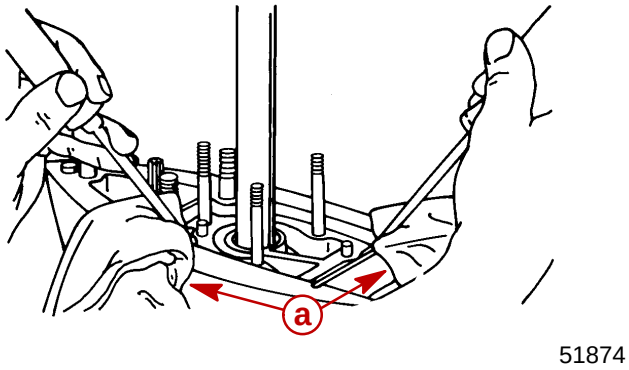

a -Pads

11. Remove (and discard) O-ring from O-ring groove on water pump base.
12. Using a screwdriver, pry oil seals out of water pump base from gear housing side of base.

Bearing Carrier and Propeller Shaft

REMOVAL

⚠ CAUTION

Gear housing MUST BE in neutral position, and shift shaft MUST BE removed from gear housing before propeller shaft can be removed from gear housing.

1. Place gear housing in a suitable holding fixture or vise with propeller shaft in a horizontal position.
2. Use Shift Shaft Bushing Tool (91-31107) to un-thread shift shaft bushing. (DO NOT remove bushing from shift shaft at this time.)
3. Bend retainer nut lock tab out of retainer nut recess.

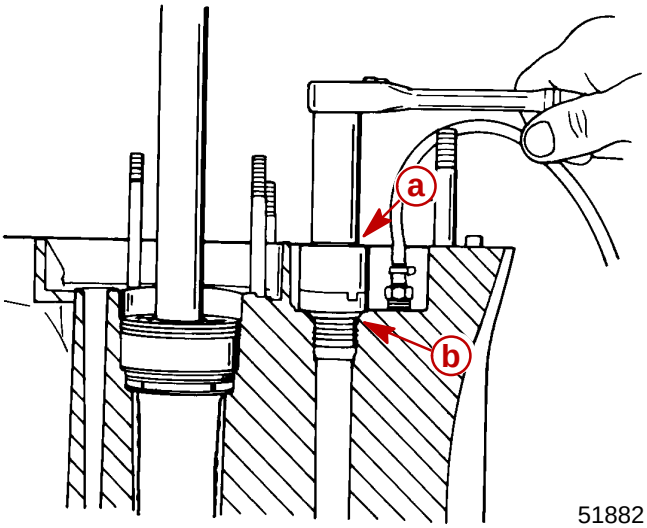

51882

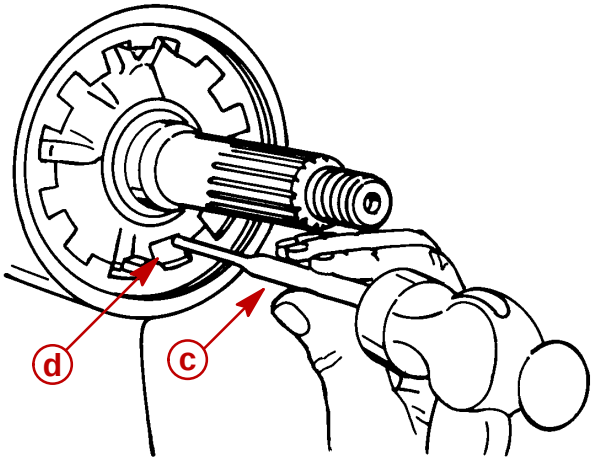

51865

a -Shift Shaft Bushing Tool (91-31107)
b -Shift Shaft Bushing
c -Punch
d -Tab of Tab Washer

4. Remove gear housing retainer nut with Retainer Nut Tool (91-61069).
5. After retainer nut has been removed, remove lock tab washer from gear housing.

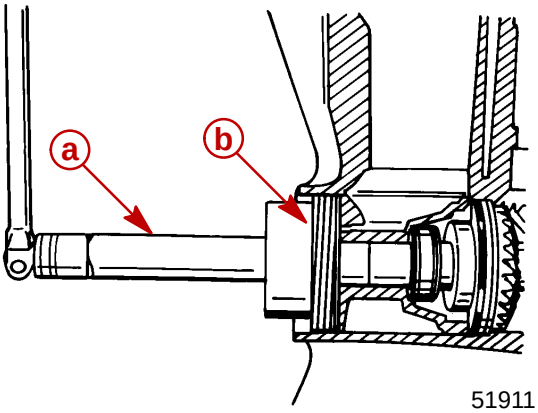

51911

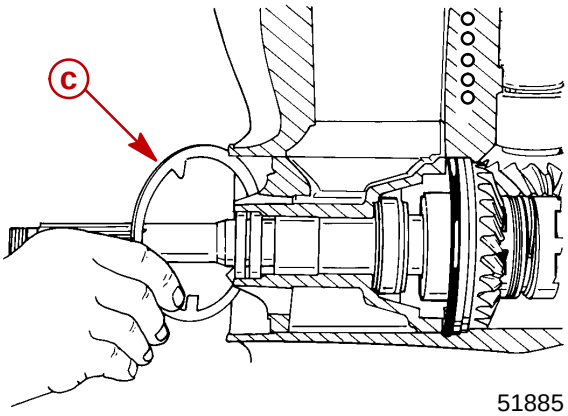

51885

a -Retainer Nut Tool (91-61069)
b -Retainer Nut
c -Tab Washer

⚠ CAUTION

Once bearing carrier is removed from gear housing, extreme care MUST BE taken not to apply any side force on propeller shaft. Side force on propeller shaft may break the neck of the clutch actuator rod.

6. Use long Puller Jaws (91-46086A1) and Puller Bolt (91-85716) to remove bearing carrier. (Use propeller thrust hub to maintain outward pressure on puller jaws.)

NOTE: *When bearing carrier is removed from gear housing, the bearing carrier alignment key will come out with it.*

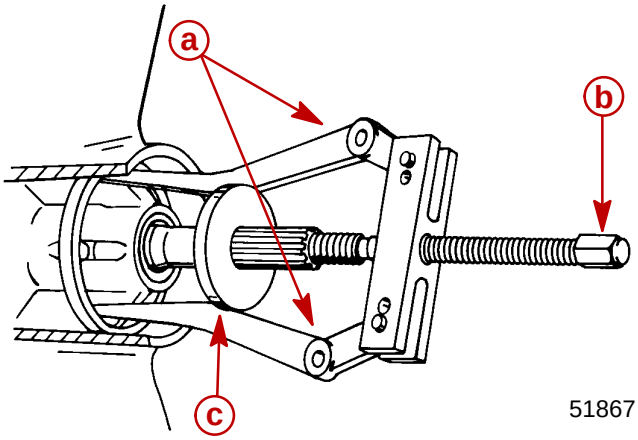

a -Long Puller Jaws (91-46086A1)
b -Puller Bolt (91-85716)
c -Thrust Hub

IMPORTANT: Prior to removal of shift shaft from gear housing, recheck that gear housing is in neutral position.

7. With gear housing in neutral, pull shift shaft out of gear housing. If necessary, use a pliers to pull shift shaft out of gear housing. If pliers are used to pull shift shaft out, wrap a strip of soft metal (aluminum) around splines before clamping pliers. DO NOT turn shaft (clockwise OR counterclockwise) while pulling shaft out. (For further information on shift shaft, see “Shift Shaft Cleaning/Inspection and Disassembly.”)

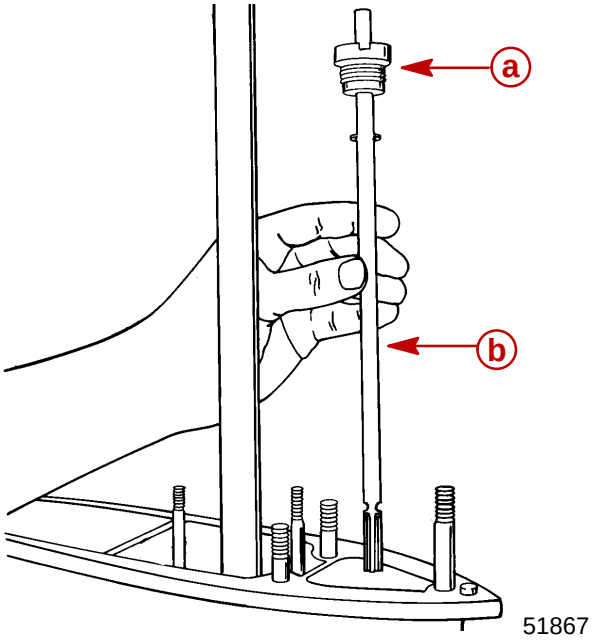

a -Shift Shaft Bushing
b -Shift Shaft

⚠ CAUTION

Propeller shaft, cam follower and shift cam, in most cases, will come out of gear housing by simply pulling outward on propeller shaft. DO NOT FORCE shaft sideways or ATTEMPT TO PULL with a slide hammer or any mechanical puller.

8. Remove propeller shaft, cam follower and shift cam by pulling shaft straight out of gear housing. (DO NOT JERK propeller shaft.)

NOTE: *Sliding clutch, forward gear assembly, bearing adaptor, thrust washer and thrust bearings will be removed from gearcase with propeller shaft.*

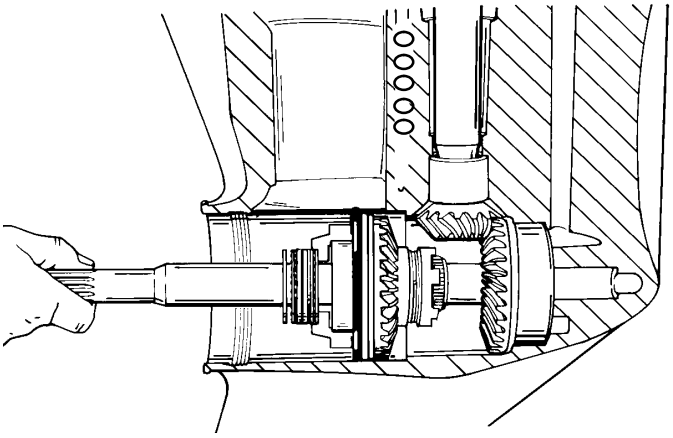

51877

9. If propeller shaft will not come out, proceed with Step “a” or “b,” following:
   a. Push propeller shaft back into place against the reverse gear. Visually inspect location of shift cam by looking down shift shaft hole (illuminated with a flashlight). If splined hole in shift cam is visible, reinstall shift shaft and rotate shift shaft to neutral position. Remove shift shaft, then remove propeller shaft as instructed in Step 8, immediately preceding.
   b. Push propeller shaft back into place against reverse gear. Slide bearing carrier back into gear housing (to support propeller shaft). Place gear housing on its left side (viewed from rear) and strike upper leading end of gear housing with a rubber mallet. This will dislodge the shift cam from cam follower into a clearance pocket in left side of gear housing. Remove bearing carrier and pull propeller shaft out of gear housing.

NOTE: *If Step 9-b was used to remove propeller shaft, the shift cam can be retrieved after removal of reverse gear.*

Shift Shaft

CLEANING AND INSPECTION

1. Clean shift shaft and bushing with solvent and dry with compressed air.
2. Check shift shaft splines on both ends for wear and/or corrosion damage.
3. Inspect shift shaft for groove(s) at shift shaft bushing seal surface.
4. Inspect shift shaft bushing for corrosion damage.
5. Inspect shift shaft bushing oil seal for wear and/or cuts.

DISASSEMBLY

1. Remove (and discard) shift shaft bushing oil seal by prying it out or driving it out with a punch and hammer.

CLEANING/INSPECTION - BEARING CARRIER

IMPORTANT: It is recommended that all seals and O-rings be replaced (as a normal repair procedure) to assure effective repair.

⚠ CAUTION
DO NOT spin bearings dry with compressed air, as this could cause bearing to score.

1. Clean bearing carrier with solvent and dry with compressed air.
2. Bearing carrier propeller shaft needle bearing condition is determined by propeller shaft bearing surface condition. (See **"Propeller Shaft Inspection."**)

DISASSEMBLY- BEARING CARRIER

1. Remove thrust bearing and thrust washer from bearing carrier.
2. If thrust bearing, thrust washer or thrust bearing surface on propeller shaft shows signs of rust, pitting or blueing from lack of lubricant, component(s) should be discarded.
3. Remove bearing carrier oil seals.

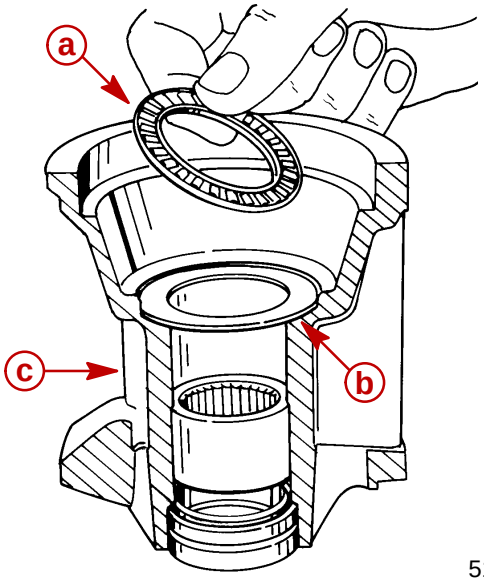

51886

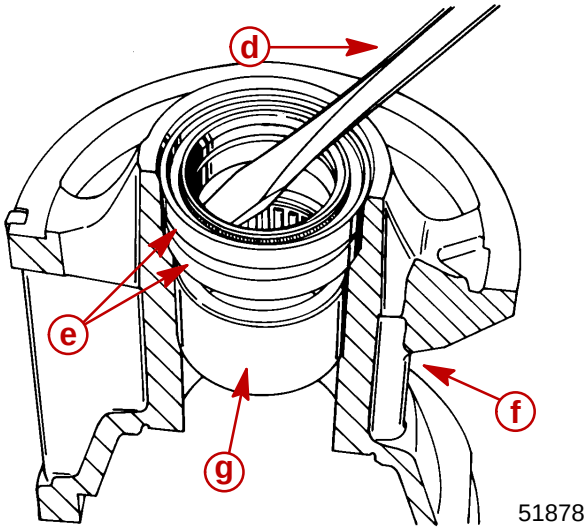

51878

a -Thrust Bearing
b -Thrust Washer
c -Bearing Carrier
d -Pry Bar
e -Oil Seals
f -Bearing Carrier
g -Bearing Carrier Needle Bearing

NOTE: *Do not remove bearing carrier needle bearing unless replacement is needed.*

4. Use bearing removal and replacement tool (91-31229A5) or equivalent to press bearings out of bearing carrier.

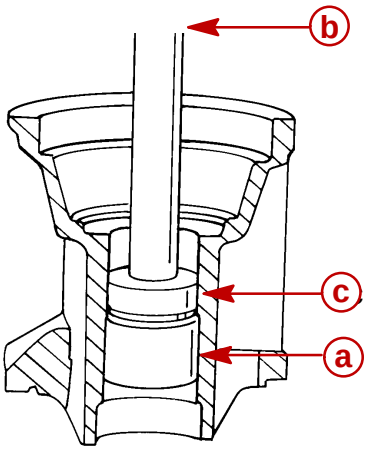

51885

a -Needle Bearing
b -Push Rod
c -Mandrel

Propeller Shaft

INSPECTION

1. Clean propeller shaft assembly with solvent and dry with compressed air.
2. Inspect bearing carrier oil seal surfaces for grooves. Run fingernail across seal surface to check for groove. Replace shaft if groove is found.
3. Visually check bearing surfaces of propeller shaft for pitting, grooves, scoring, uneven wear or discoloration (bluish color) from overheating. Replace shaft and corresponding needle bearing if any of the above conditions are found. (Bearing carrier needle bearing contacts propeller shaft just in front of oil seal surface. Reverse gear bearing contacts propeller shaft in front of sliding clutch splines.)
4. Inspect propeller shaft splines for wear and/or corrosion damage.
5. Check propeller shaft for straightness. Use either method, following:

Balance Wheels

Place propeller shaft on balance wheels, as shown. Rotate propeller shaft and observe propeller end of shaft for “wobble.” Replace shaft if any wobble is observed.

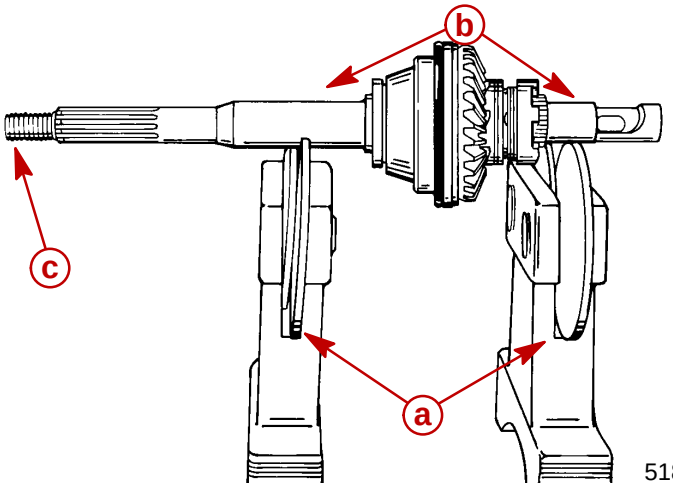

51877

a -Balance Wheels
b -Bearing Surfaces
c -Watch for Wobble

"Vee" Blocks and Dial Indicator

Position propeller shaft roller bearing surfaces on vee blocks. Mount a dial indicator at front edge of propeller splines. Rotate propeller shaft. Dial indicator movement of more than 0.006 in. (0.152 mm) (or noticeable wobble) is reason for replacement.

DISASSEMBLY

1. Remove shift cam from cam follower.
2. Insert a thin blade screwdriver or awl under first coil of cross pin retainer spring and rotate propeller shaft to unwind spring from sliding clutch. DO NOT overstretch spring.

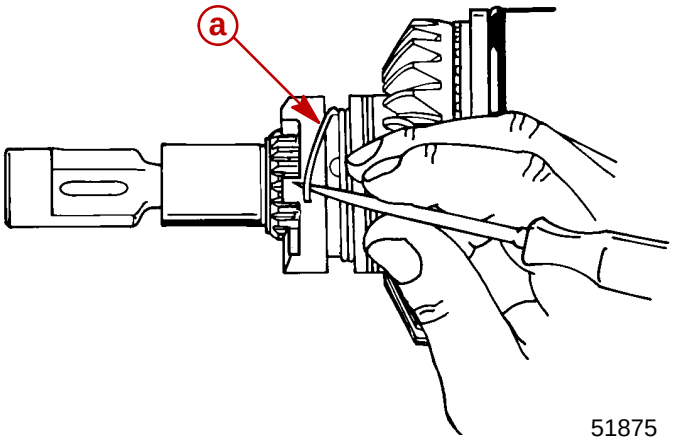

a -Cross Pin Retainer Spring

⚠ CAUTION
Detent pin is free and can fall out of sliding clutch. Care MUST BE taken not to lose pin.

3. Detent pin is free and can be removed from sliding clutch at this time.
4. Push cross pin out of sliding clutch and propeller shaft with a punch.

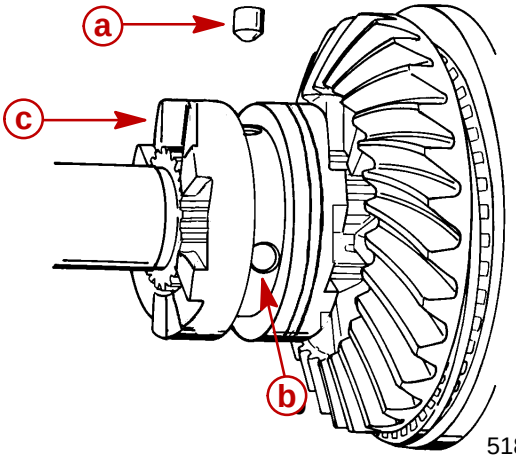

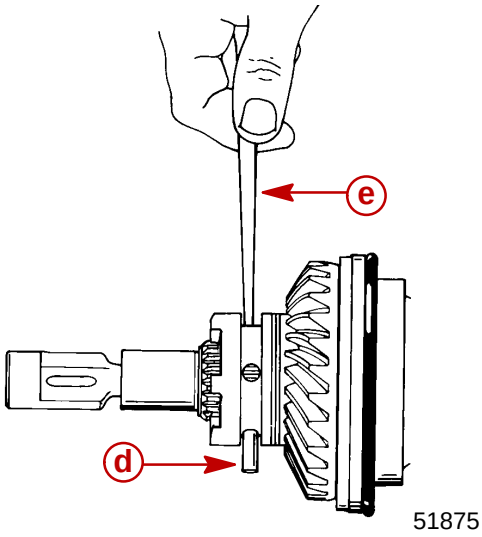

a -Detent Pin
b -Cross Pin
c -Sliding Clutch
d -Cross Pin
e -Punch

5. Pull sliding clutch off propeller shaft.
6. Inspect sliding clutch. Check reverse gear clutch “jaws” and forward gear clutch “jaws.” Rounded “jaws” indicate one or more of the following:
   a. Improper shift cable adjustment.
   b. Improper shift habits of operator(s) (shift from neutral to reverse gear or forward gear too slowly).
   c. Engine idle speed too high (while shifting).

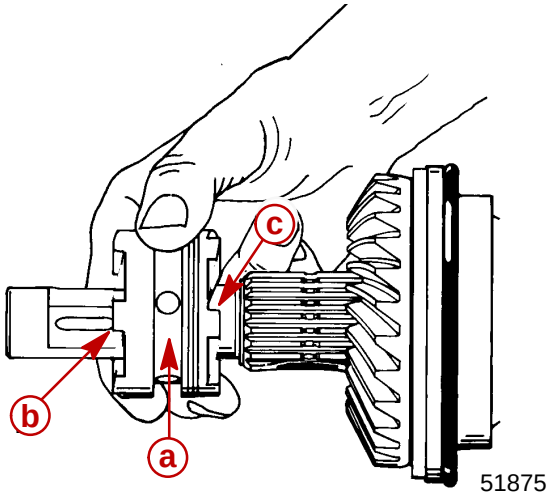

a -Sliding Clutch
b -Reverse Gear Clutch Jaws
c -Forward Gear Clutch Jaws

7. Pull cam follower and clutch actuator rod out of propeller shaft. DO NOT force cam follower up-or-down or side-to-side when pulling from propeller shaft.
8. Once cam follower and clutch actuator rod are removed from propeller shaft, lift rod out of cam follower.
9. Check condition of cam follower. If it shows wear (pitting, scoring or rough surface), replace cam follower and shift cam.
10. Remove forward gear and bearing adaptor assembly.
11. Remove 2 thrust races and 2 keepers from prop shaft.

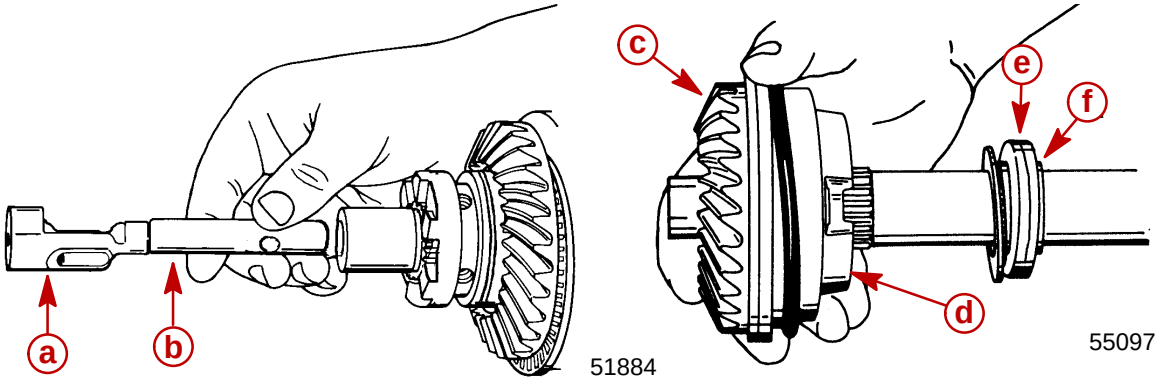

a -Cam Follower
b -Clutch Actuator Rod
c -Forward Gear
d -Bearing Adaptor Assembly
e -Thrust Races (2)
f -Keepers (hidden) (2)

Clutch Actuator Rod

CLEANING AND INSPECTION

1. Clean clutch actuator rod in solvent and dry with compressed air.
2. Inspect actuator components for wear or damage. Replace components as required.

Forward Gear and Bearing Adapter

DISASSEMBLY/CLEANING/INSPECTION

1. Remove forward gear from bearing adapter.
2. Inspect forward gear clutch teeth for signs of wear. If clutch teeth are worn, sliding clutch should be replaced also.
3. Inspect forward gear teeth for full tooth contact, chips, pits and signs of rust. If forward gear teeth are damaged, pinion gear must be inspected and replaced if necessary.
4. Inspect forward gear hub for signs of pitting, rust, scoring or discoloration (blueing) due to lack of lubricant.
5. Remove thrust bearing and spacer shim. Inspect thrust bearing for pits, rust, or discoloration (blueing) due to lack of lubricant.

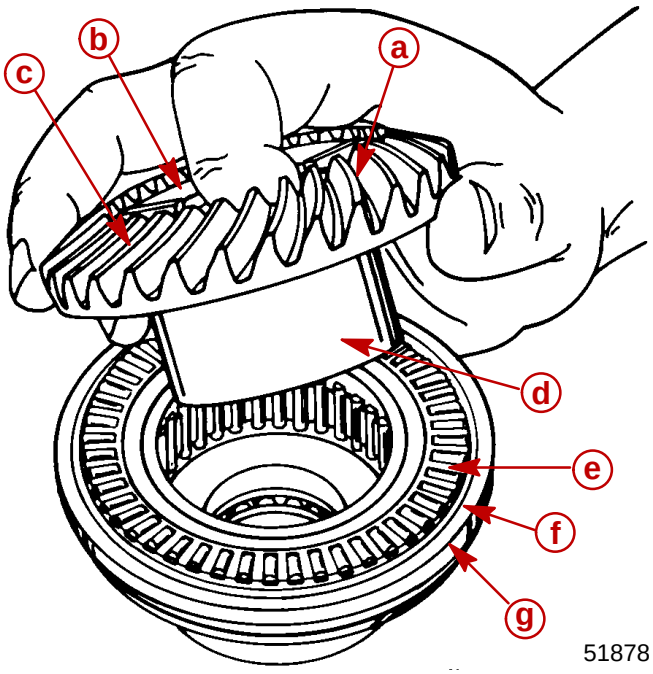

a -Forward Gear
b -Forward Gear Clutch Teeth
c -Forward Gear Teeth
d -Forward Gear Hub
e -Thrust Bearing
f -Thrust Washer
g -Spacer Shim

6. Remove thrust washer and O-ring. The thrust washer acts as a bearing surface for the thrust bearing and it should be inspected for pits, rust, scoring or discoloration due to lack of lubricant. O-ring should be inspected for cuts or abrasions and replaced if necessary.
7. Remove thrust bearing and thrust washer from bearing adaptor. Thrust roller bearing should be inspected for pitting, rust or signs of discoloration (blueing) due to lack of lubricant. If thrust roller bearing must be replaced, the bearing surfaces on the thrust washer and propeller shaft where the thrust roller bearing rides should also be inspected for signs of wear.

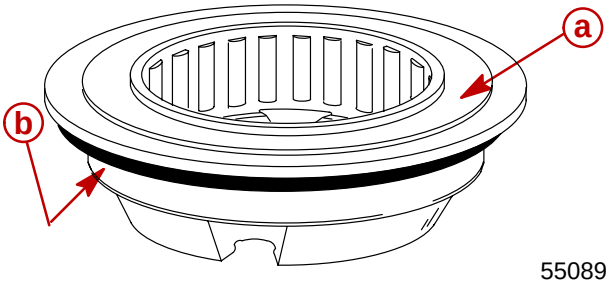

55089

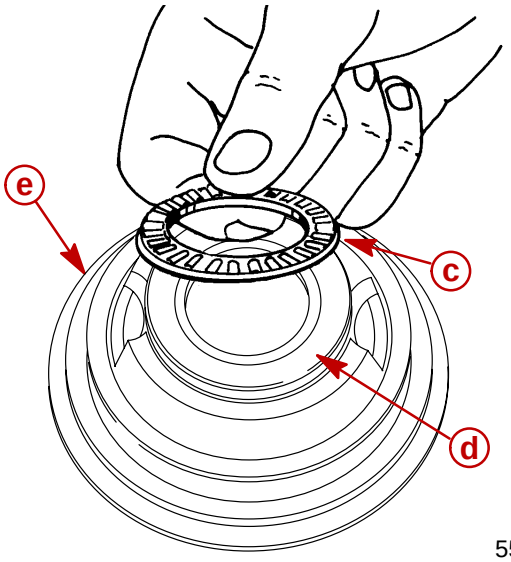

55090

a -Thrust Washer
b -O-Ring (hidden)
c -Thrust Bearing
d -Thrust Washer
e -Bearing Adaptor

8. The forward gear bearing should be carefully inspected for smoothness of movement, pits, rust, or signs of discoloration (blueing) due to lack of lubricant. If the bearing must be replaced, it is recommended that a hammer and cape chisel be used to break the bearing loose from the bearing adapter. Be careful not to damage bearing adapter when removing roller bearing.

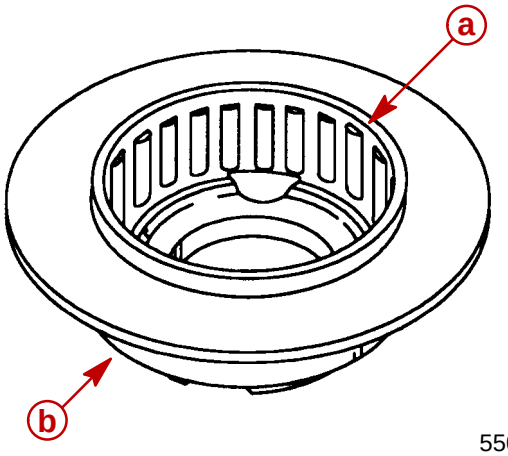

55091

a -Forward Gear Bearing
b -Bearing Adaptor

Pinion Gear and Driveshaft

REMOVAL

1. Remove bearing retainer using Bearing Retainer Tool (91-43506).

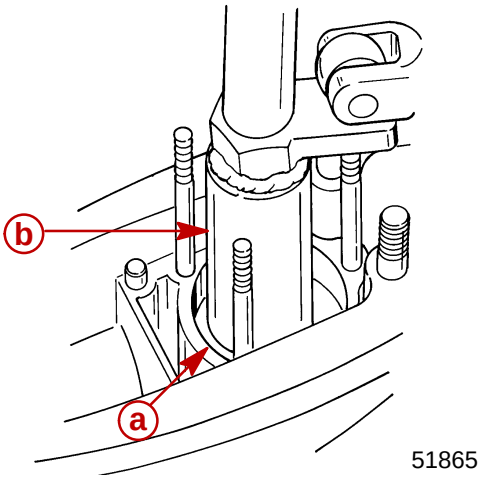

a -Bearing Retainer
b -Bearing Retainer Tool (91-43506)

2. Place Driveshaft Holding Tool (91-34377A1) over driveshaft splines.
3. Use a socket and flex handle to hold pinion nut. (Pad area of gear housing, where flex handle will make contact, to prevent damage to gear housing.)
4. Use a socket and flex handle on Driveshaft Holding Tool to loosen pinion nut. Remove pinion nut and Driveshaft Holding Tool.
5. Remove gear housing from vise and re-position it as shown. Be sure to use soft jaw vise covers and clamp as close as possible to water pump studs.
6. Place a block of wood on gear housing mating surface. Use a mallet and carefully tap gear housing away from driveshaft.

⚠ CAUTION
DO NOT strike gear housing hard with the mallet or allow gear housing to fall.

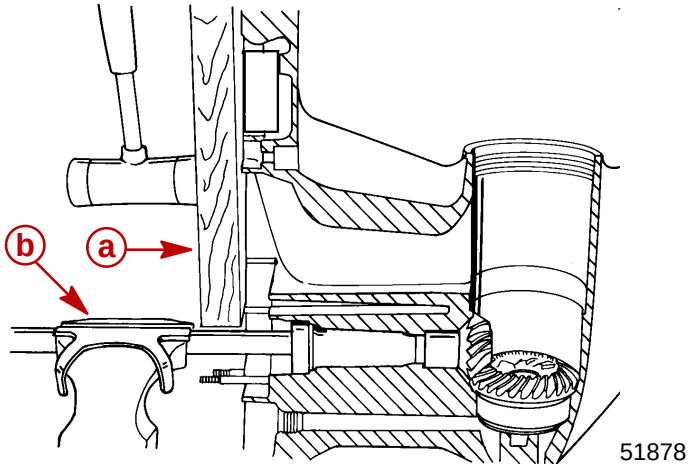

a -Wooden Block
b -Soft Jaw Vise Covers

7. Reach into gear housing and remove pinion gear.

8. After driveshaft is removed from gear case, remove and retain shim(s) that were located under upper tapered driveshaft bearing.
9. If inspection determines that replacement of driveshaft tapered bearing is required, remove bearing from driveshaft as follows:
   a. Position driveshaft in a vise; DO NOT tighten vise jaws against shaft.
   b. Strike shaft with a lead hammer; take care not to drop shaft.

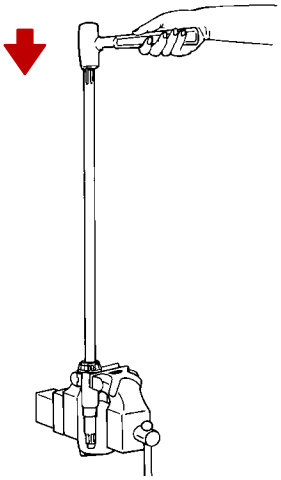

51866

10. Remove 18 loose needles from outer race of driveshaft needle bearing.
11. If inspection of driveshaft needle bearing surface determines that replacement of needle bearing is required, the 18 loose needle bearings previously removed must be reinstalled in bearing race to provide surface for mandrel to drive against.

NOTE: *Reverse gear must be removed first before removing driveshaft needle bearing.*

IMPORTANT: Discard driveshaft needle bearing after removal. (Bearing cannot be reused.)

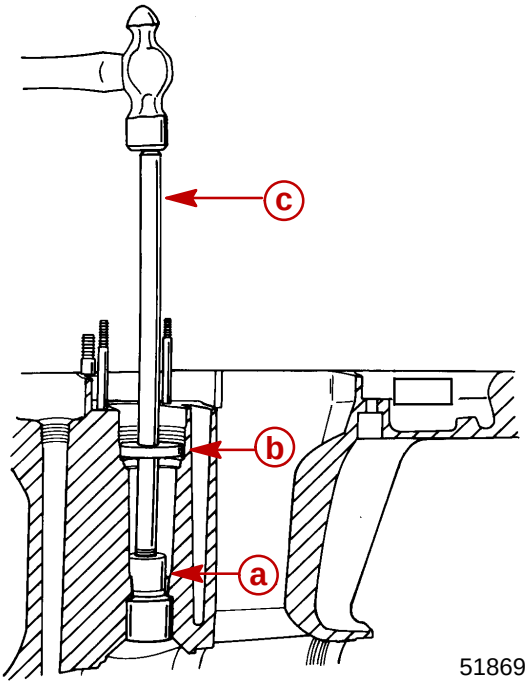

51869

a -Mandrel (91-37263)
b -Pilot* (91-36571)
c -Driver Rod* (91-37323)

*From Bearing Removal and Installation Kit (91-31229A5)

CLEANING AND INSPECTION

1. Clean driveshaft, tapered bearing and race, and pinion gear with solvent. Dry with compressed air. DO NOT allow driveshaft bearing to spin while drying.
2. Inspect pinion gear for pitting, grooves, scoring, uneven wear and/or discoloration from overheating. Replace pinion gear, if any of the above conditions are found.
3. Inspect driveshaft needle bearing surface (area just above pinion gear splines) for pitting, grooves, scoring, uneven wear and/or discoloration from overheating. Replace driveshaft and driveshaft needle bearing, if any of the preceding conditions are found.
4. Inspect driveshaft to crankshaft splines for wear. Replace driveshaft if wear is excessive.
5. Inspect tapered bearing race for pitting, grooves, scoring, uneven wear and discoloration from overheating. Replace tapered bearing and race as a set, if any of the preceding conditions are found.
6. Inspect driveshaft for groove(s) where water pump base oil seals contact shaft. Replace driveshaft if groove(s) are found.

Reverse Gear

REMOVAL AND DISASSEMBLY

NOTE: *Reverse gear can be removed from gear housing only after driveshaft and pinion gear have been removed.*

NOTE: *Cautiously applying heat to both sides of gearcase where reverse gear assembly is located will aid in removal of bearing cup adapter.*

1. Remove reverse gear by hand.

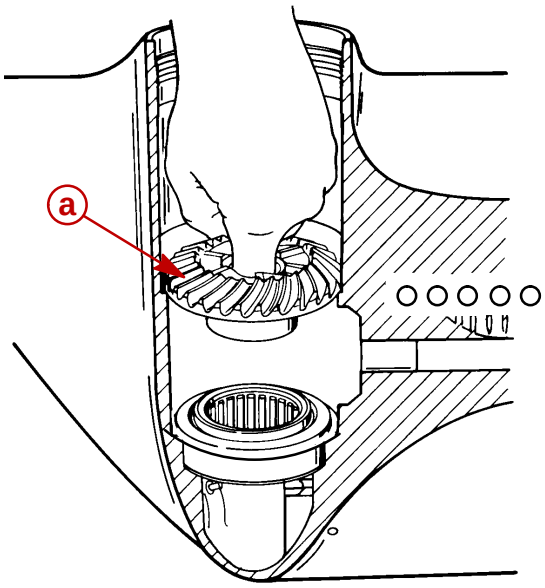

a -Reverse Gear

IMPORTANT: DO NOT remove needle bearing from reverse gear unless replacement of bearing is required. Bearing cannot be reused after it has been removed.

2. Remove thrust bearing and thrust washer from reverse gear bearing cup.
3. Remove reverse gear bearing adaptor. Remove, measure and make note of the shim thickness and **discard (DO NOT reuse shims if they are damaged during removal) the shims.**

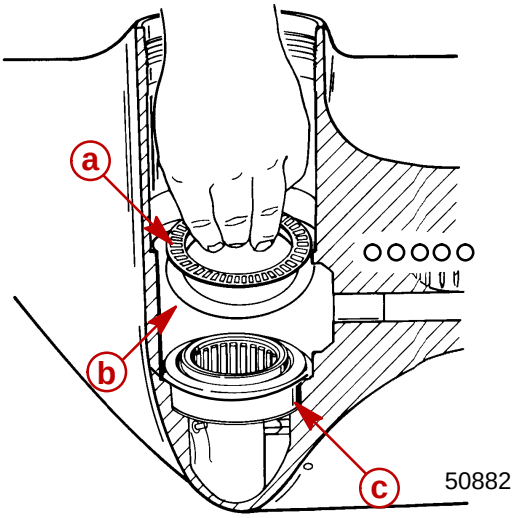

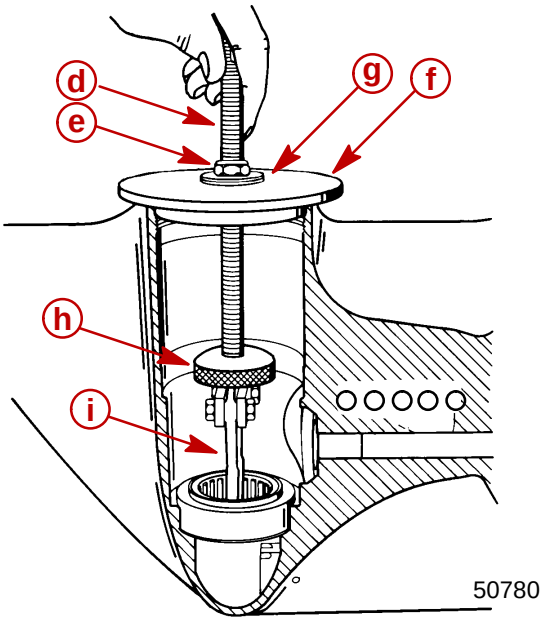

a -Thrust Bearing
b -Thrust Washer
c -Reverse Gear Bearing Adaptor
d -Bolt (91-31229)
e -Nut (91-11-24156)
f -Guide Plate (91-816243)
g -Washer (91-34961)
h -Puller Head (from Slide Hammer Puller Kit 91-34569A1)
i -Jaws (91-816242)

CLEANING AND INSPECTION

⚠ CAUTION
DO NOT spin bearings dry with compressed air, as this could cause bearing to score.

1. Clean reverse gear and bearing with solvent and dry with compressed air. DO NOT spin the bearing.
2. Inspect gear teeth for pitting, grooves, scoring, uneven wear and for discoloration (from overheating). Replace gear if any of these conditions are found.

3. Check clutch jaws on reverse gear for damage. Replace reverse gear if damage is found.

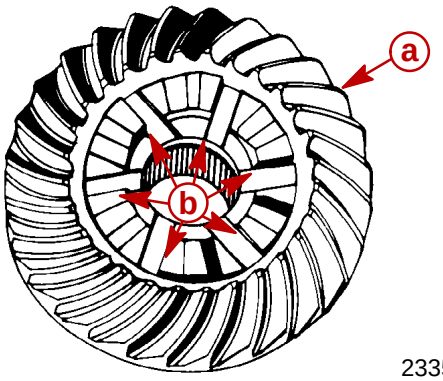

23351

a -Reverse Gear Teeth
b -Clutch Jaws

NOTE: *The needle bearings in the reverse gear should not be removed unless damage has been found. Inspect to ensure that all of the needles are present and in position. Needles that have been dislodged may be snapped back into place as long as no damage has occurred to the bearing cage.*

4. Inspect the needle bearings on the inside of the reverse gear and the bearing surface on the propeller shaft. If either the needle bearings or the bearing surface of the propeller shaft is pitted grooved, worn unevenly, discolored from overheating or has embedded particles, replace the propeller shaft and needle bearing in the reverse gear.

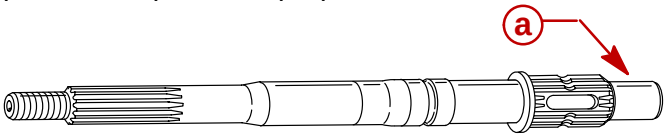

a -Reverse Gear Needle Bearing Contact Area

5. If reverse gear needle bearing is found to be damaged, place reverse gear in a press and use mandrel 91-63569 to press bearing out of gear.

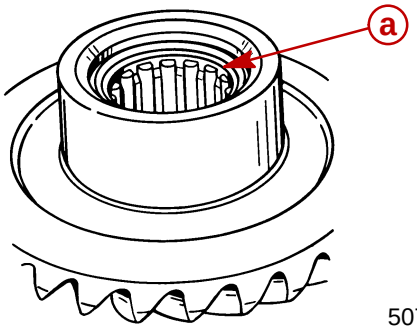

50778

a -Bearing

Gear Housing

CLEANING AND INSPECTION

1. Clean gear housing with solvent and dry with compressed air.
2. Check gear housing carefully for impact damage.
3. Check for loose fitting bearing adaptors and needle bearings.

NOTE: *If bearing adaptors have spun in gear case, gear housing must be replaced.*

4. Inspect bearing carrier cover nut retainer threads in gear housing for corrosion damage and/or stripped threads.

Reassembly and Installation of Counter Rotation Gear Housing

Driveshaft Needle Bearing

REASSEMBLY/INSTALLATION

⚠ CAUTION

If driveshaft needle bearing failure has occurred, and original bearing race has turned in the gear housing, gear housing must be replaced. Loose fitting needle bearing will move out of position and cause repeated failures.

NOTE: *Driveshaft needle bearing must be installed prior to installation of reverse gear.*

1. Apply a thin coat of Quicksilver 2-4-C w/Teflon Lubricant to driveshaft needle bearing bore in gear housing.
2. By way of propeller shaft cavity, place needle bearing in driveshaft bore with numbered side of bearing facing up driveshaft bore.
3. Install and seat needle bearing with the following tools: Puller Rod* (91-31229), Nut* (91-24156), Pilot* (91-36571), Plate* (91-29310), and Mandrel* (91-92788). Pull bearing up into bore until it bottoms on gear housing shoulder. (DO NOT use excessive force.)

*From Bearing Removal and Installation Kit (91-31229A5)

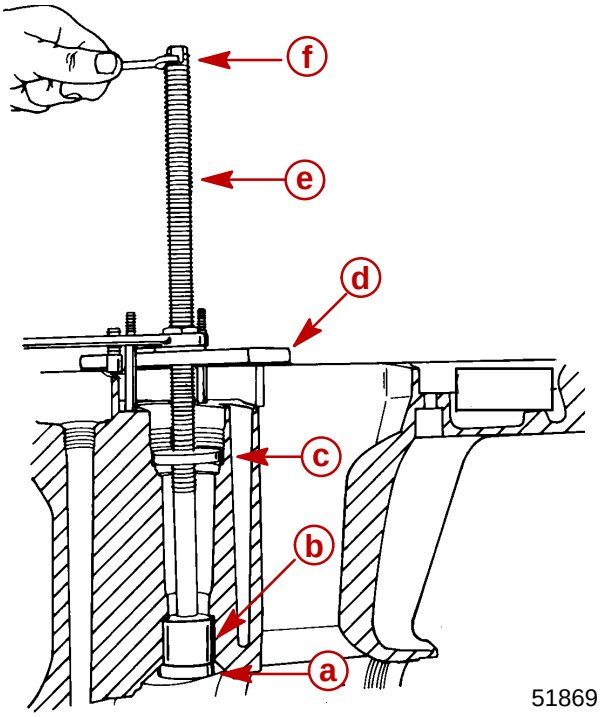

a -Mandrel
b -Bearing
c -Pilot
d -Plate
e -Puller Rod
f -Hold

Bearing Carrier, Forward Gear and Bearing Adaptor

REASSEMBLY

1. Using suitable mandrel, press forward gear bearing into bearing adaptor until bearing is flush with lip of adaptor.

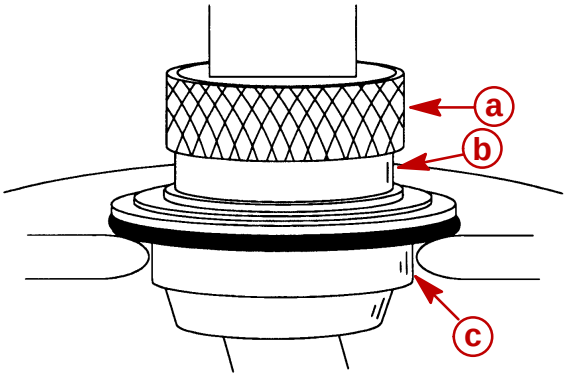

a -Suitable Mandrel
b -Forward Gear Bearing
c -Bearing Adaptor

PROPELLER SHAFT NEEDLE ROLLER BEARING AND OIL SEAL INSTALLATION

1. Using mandrel 91-15755, press bearing carrier needle bearing (number side up) into bearing carrier until mandrel shoulder contacts bearing carrier.

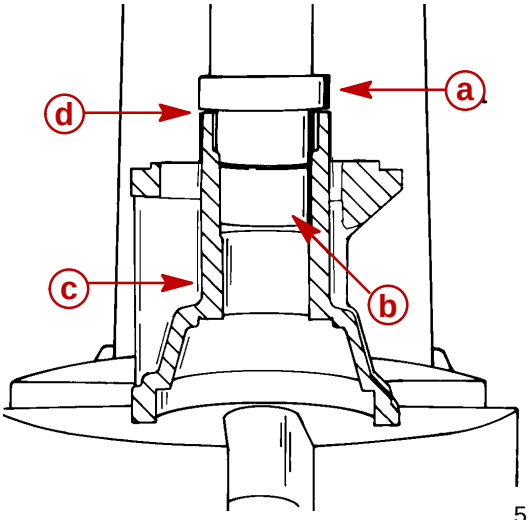

51881

a -Mandrel (91-15755)
b -Bearing Carrier Needle Bearing
c -Bearing Carrier
d -Shoulder

2. Apply Loctite 271 (92-809820) to outside diameter of oil seals.

3. With seal lip facing towards bearing, press inner seal (a) using long end of mandrel (b) (91-31108) into bearing carrier (c) until mandrel shoulder (d) bottoms out on bearing carrier.

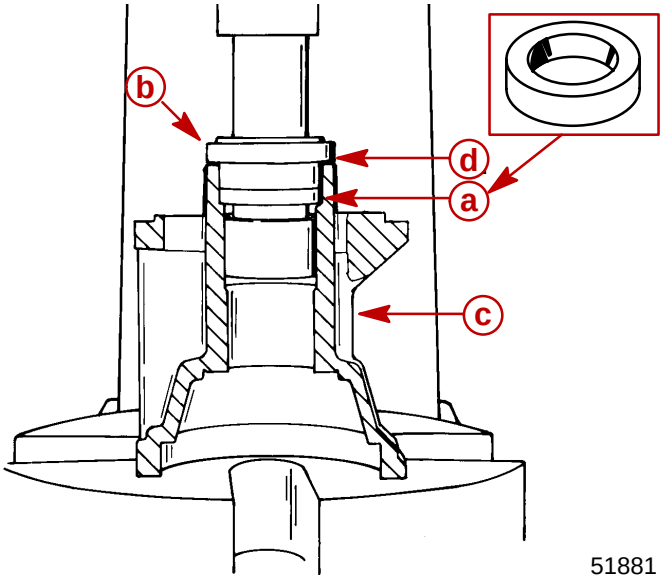

a -Inner Seal
b -Mandrel (91-31108)
c -Bearing Carrier
d -Mandrel Shoulder

4. With seal lip facing towards mandrel, press outer seal (a) using short end of mandrel (b) (91-31108) into bearing carrier (c) until mandrel shoulder (d) bottoms out on bearing carrier.

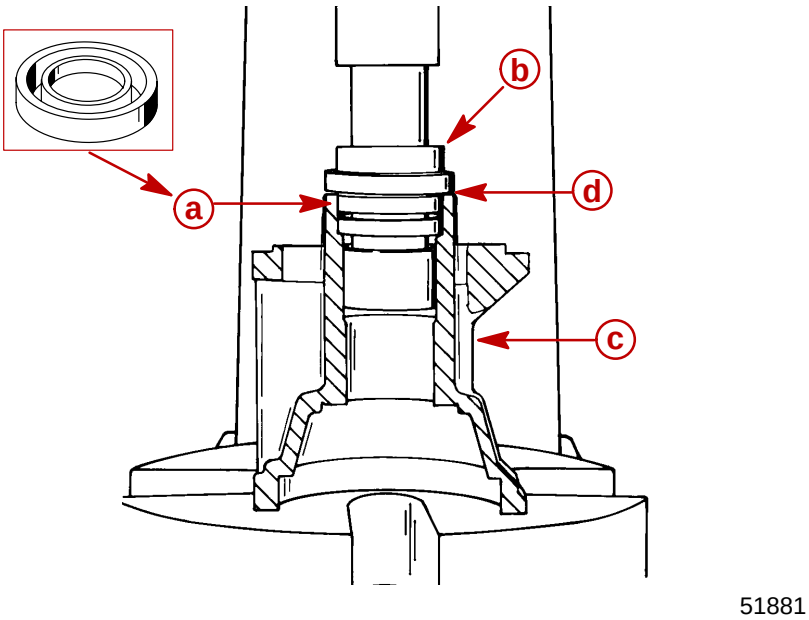

a -Outer Seal
b -Mandrel (91-31108)
c -Bearing Carrier
d -Mandrel Shoulder

5. Lubricate both seal lips with 2-4-C w/Teflon Marine Lubricant (92-90018A12).

REVERSE GEAR AND BEARING CUP ADAPTOR REASSEMBLY

1. With reverse gear teeth facing down, use mandrel (91-86943) to press propeller shaft needle bearing (NUMBERS/LETTERS UP) into reverse gear until short shoulder on mandrel bottoms on reverse gear.

NOTE: *If gear housing has been replaced or inspection determines that reverse gear bearing adapter must be replaced, assemble and install as follows:*

2. Place reverse gear roller bearing (NUMBER/LETTERS UP) in press. Using suitable mandrel, press bearing cup adapter onto reverse gear bearing.

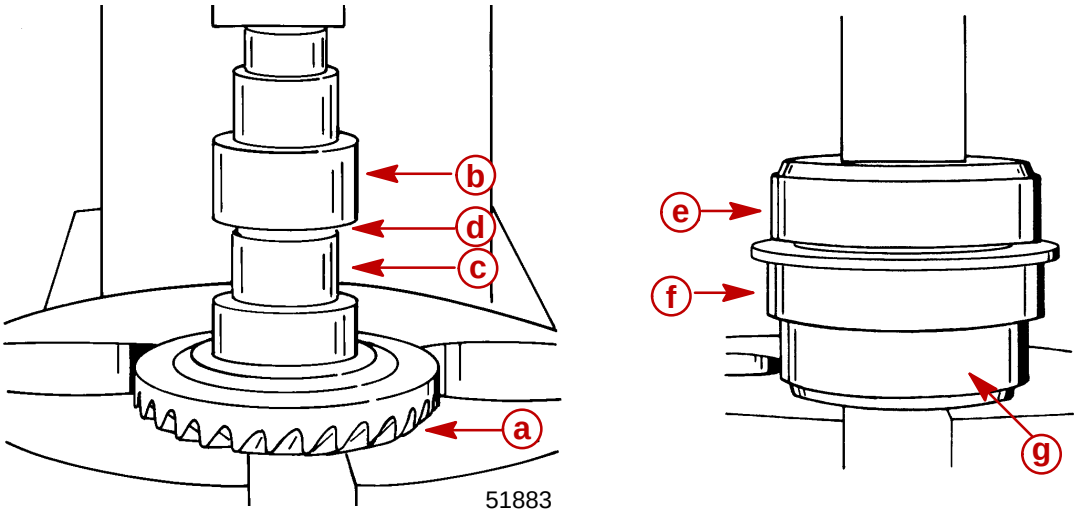

a -Reverse Gear Teeth
b -Mandrel (91-86943)
c -Propeller Shaft Needle Bearing
d -Shoulder
e -Mandrel
f -Bearing Cup Adapter
g -Reverse Gear Roller Bearing

IMPORTANT: The appearance of the forward and reverse gear is almost identical. There are two ways to distinguish between the reverse and forward gears. The reverse gear has a shorter hub and it has a smaller inner diameter needle bearing bore.

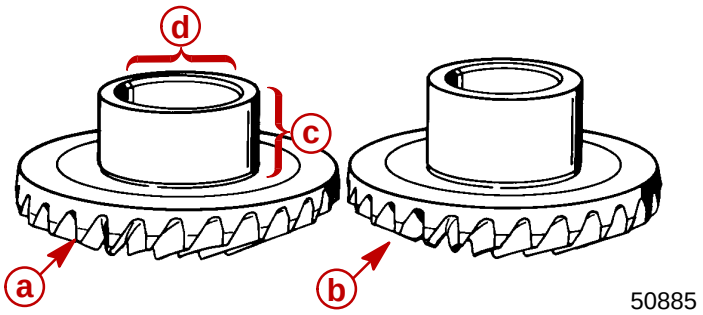

a -Reverse Gear
b -Forward Gear
c -Shorter Length Hub
d -Smaller Diameter Bearing Bore

Reverse Gear Bearing Adaptor Assembly

INSTALLATION

NOTE: *If the reverse gear, reverse gear adaptor, large thrust bearing, or bearing race in the gear housing were not replaced, install the same shim(s) (or the same thickness of shim(s)) that were taken out when adaptor was removed. If the reverse gear, reverse gear adaptor, large thrust bearing, bearing race, or gear housing were replaced, install 0.008 in. (0.51 mm) of shims.*

NOTE: *If backlash has already been checked and it has determined that it needs to be adjusted, (see Checking Reverse Gear Backlash), adding 0.001 in. (0.025 mm) shims will* ***reduce*** *the gear backlash by approximately 0.001 in. (0.025 mm). Subtracting 0.001 in. (0.025 mm) shims will* ***increase*** *backlash by approximately the same amount.*

Example 1 (if backlash is too high)

Backlash checks:	0.045 in.	(1.14 mm)
(subtract) middle of specification:	0.025 in.	(0.64 mm)
You get:	0.020 in.	(0.51 mm)
add this quantity of shims:		

Example 2 (if backlash is too low)

middle of specification:	0.025 in.	(0.64 mm)
Backlash checks:	0.009 in.	(0.23 mm)
(subtract) You get:	0.016 in.	(0.41 mm)
subtract this quantity of shims:		

1. Lubricate the bore into which the reverse gear bearing adaptor is to be installed with Quicksilver Super Duty Gear Lubricant.
2. Place the shim(s) into reverse bore of gear housing.
3. Position the bearing adaptor in the gear housing.

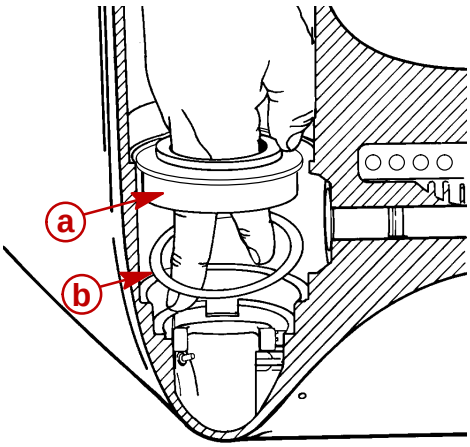

a -Bearing Adaptor
b -Shims

4. Position the reverse gear (without the thrust race or thrust bearing) into the gear housing and into the adaptor.

5. Install PILOT RING (91-18603) over DRIVER TOOL (91-18605) and seat pilot ring in gearcase against inner ledge. Thread RETAINER (91-18604) into bearing carrier threads. Install SCREW (10-18602) into retainer and gently tighten screw against driver tool while holding retainer securely. Continue to apply pressure against driver rod until reverse gear/bearing cup adaptor JUST SEATS in gearcase. DO NOT OVER-SEAT the adaptor as the reverse gear bearing will be damaged. As bearing adaptor begins to seat, the effort required to turn screw will increase considerably.

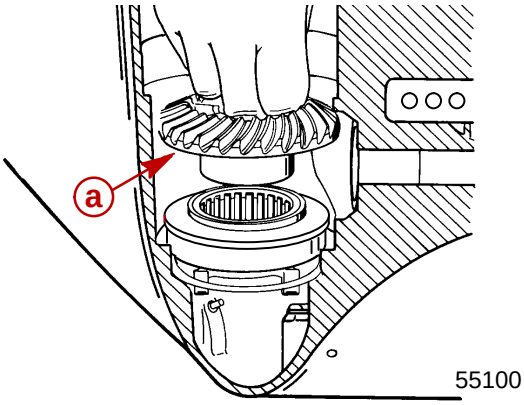

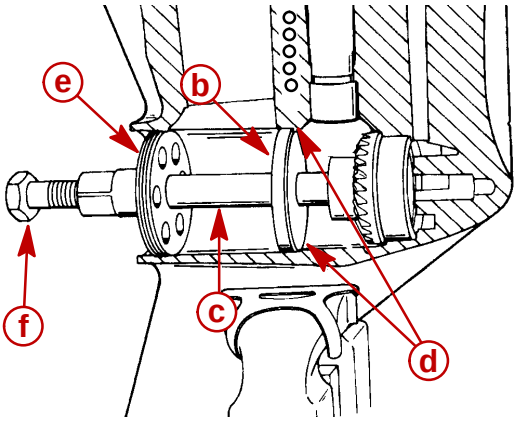

a -Reverse Gear
b -Pilot Ring (91-18603)
c -Driver Tool (91-18605)
d -Inner Ledge
e -Retainer (91-18604)
f -Screw (10-18602)

6. After reverse bearing adaptor is seated, remove screw, retainer, driver tool, pilot ring and reverse gear. Apply Quicksilver Super Duty Gear Lubricant to thrust bearing and install thrust race and bearing onto bearing adaptor.

7. Reinstall reverse gear into bearing adaptor.

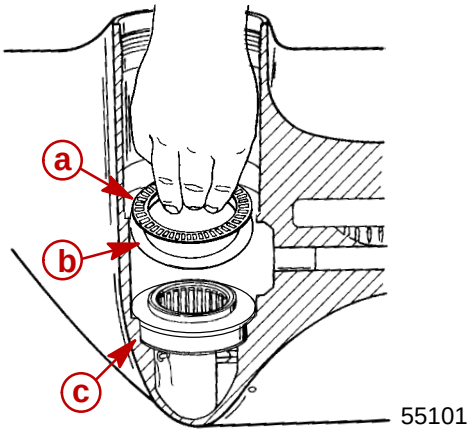

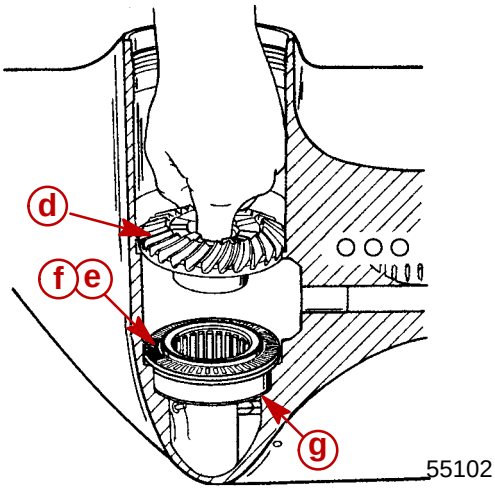

a -Thrust Bearing
b -Thrust Washer
c -Bearing Adaptor
d -Reverse Gear
e -Thrust Bearing
f -Thrust Washer (under thrust bearing)
g -Bearing Adaptor

Driveshaft and Pinion Gear

REASSEMBLY/INSTALLATION

1. Apply a light coat of Quicksilver Super Duty Gear Lubricant on I.D. of driveshaft tapered bearing.
2. Thread a used pinion nut onto end of driveshaft. Leave approximately 1/16 in. (1.6 mm) of nut threads exposed. Driveshaft threads MUST NOT extend beyond nut or thread damage could result while pressing.
3. Place bearing over driveshaft.
4. Using an old driveshaft bearing inner race or other suitable mandrel (which applies pressing force on center bearing race only), press bearing onto shaft until seated.

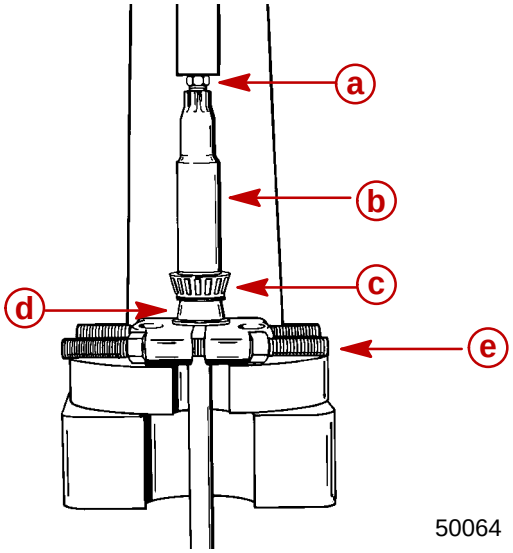

a -Used Pinion Nut
b -Driveshaft
c -Tapered Bearing
d -Old Bearing Inner Race
e -Universal Puller Plate

5. Position pinion gear in gear housing below driveshaft bore with teeth of pinion gear meshed with teeth of reverse gear.
6. Insert driveshaft into driveshaft bore while holding pinion gear. Rotate driveshaft to align and engage driveshaft splines with pinion gear splines. Continue to insert driveshaft into gear housing until driveshaft tapered bearing is against bearing race.
7. Apply Loctite 271 to threads of pinion gear nut and install flat washer and nut on driveshaft with flat side of nut away from pinion gear.
8. Place shim(s) (retained from disassembly) into gear housing. If shim(s) were lost or are not reusable (damaged), start with approximately 0.010 in. (0.254 mm).

9. Install bearing race and bearing retainer.

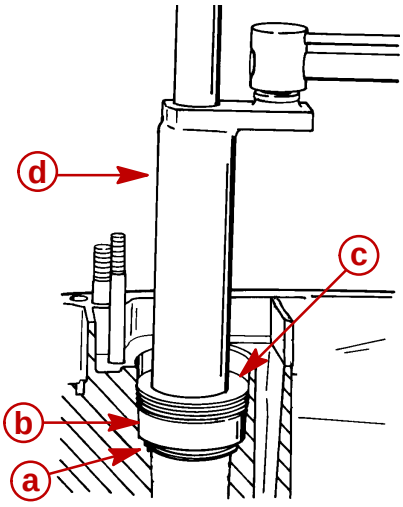

51880

a -Shim(s)
b -Bearing Race
c -Bearing Retainer (Word “OFF” must be visible); Torque to 100 lb. ft. (135.5 Nm)
d -Bearing Retainer Tool (91-43506)

10. Use a socket and breaker bar to hold pinion nut (pad area where flex handle will contact gear housing while torquing nut).
11. Place Driveshaft Holding Tool (91-34377A1) over crankshaft end of driveshaft. Torque pinion nut to 75 lb. ft. (101.5 Nm).

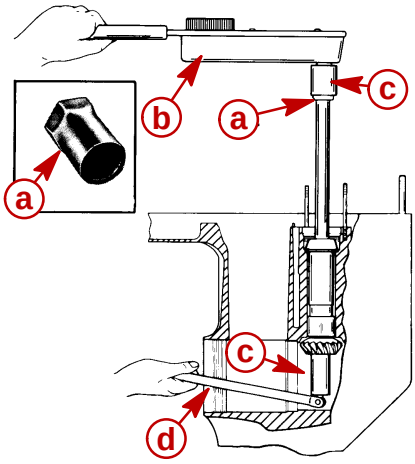

a -Driveshaft Holding Tool (91-34377A1)
b -Torque Wrench; Torque Nut to 75 lb. ft. (101.5 Nm)
c -Socket
d -Breaker Bar

IMPORTANT: Wipe any excess Loctite from pinion nut and pinion gear.

Pinion Gear Depth

DETERMINING PINION GEAR DEPTH

NOTE: *Read entire procedure before attempting any change in shim thickness.*

IMPORTANT: Reverse gear assembly must be installed in gear housing when checking pinion gear depth or an inaccurate measurement will be obtained.

1. Clean gear housing bearing carrier shoulder.
2. Install Bearing Preload Tool (91-14311A1) over driveshaft in sequence shown.

NOTE: *Bearing Preload Tool (91-44307A1) may also be used. Follow instructions provided with tool for proper installation.*

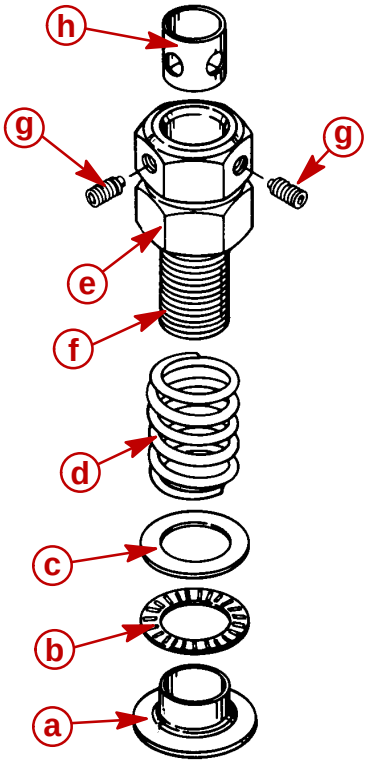

a -Adaptor
b -Bearing
c -Washer
d -Spring
e -Nut; thread nut all the way onto bolt
f -Bolt
g -Set Screw
h -Sleeve; holes in sleeve must align with set screws

3. Align adaptor on driveshaft bearing pocket ledge.
4. With tool installed over driveshaft, tighten both set screws securely, making certain to align sleeve holes to allow set screws to pass thru.

5. Measure distance (a) and increase that distance by 1 in. (25.4 mm) by turning bottom nut away from top nut.

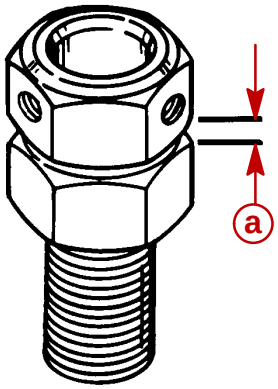

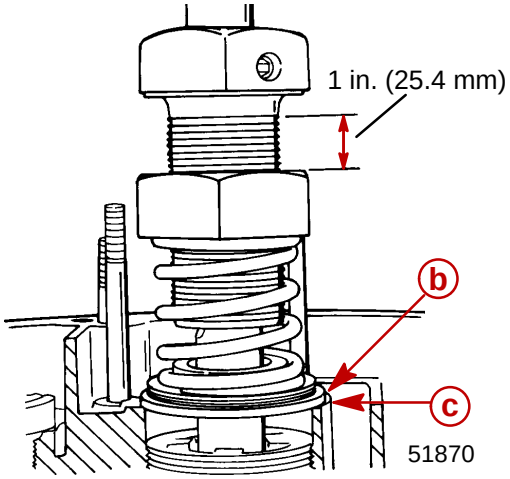

a -Distance
b -Adaptor
c -Ledge

6. Turn driveshaft clockwise 2 or more turns to seat driveshaft bearings.
7. Insert Pinion Gear Locating Tool* (91-74776) into gear housing until it bottoms out on bearing carrier Shoulder.

*Pinion Gear Locating Tool (91-12349A2) can be used. Use flat #7 and disc #2. Follow instructions supplied with tool.

8. Determine pinion gear depth by inserting a feeler gauge thru access slot in pinion gear shimming tool.
9. Clearance between shimming tool and pinion gear should be 0.025 in. (0.64 mm).
10. If clearance is correct, leave Bearing Preload Tool on driveshaft for **"Determining Forward Gear Backlash,"** following.
11. If clearance is not correct, add (or subtract) shims at location shown to raise (or lower) pinion gear.
    When reinstalling pinion nut, apply Loctite 271 on threads of nut and retorque pinion nut.

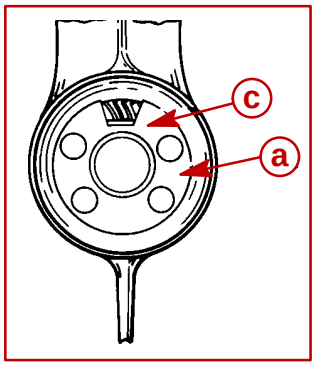

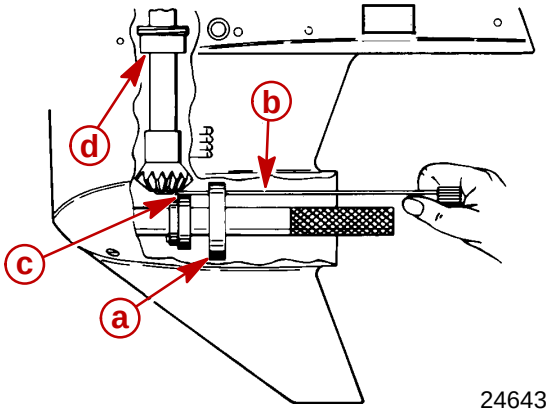

a -Pinion Gear Shimming Tool (91-74776 or 91-12349A2)
b -Feeler Gauge
c -Obtain 0.025 in. (0.64 mm) Clearance between Shimming Tool and Pinion Gear
d -Add or Subtract Shim(s) Here

NOTE: *Bearing Preload Tool (91-14311A1) should remain installed on driveshaft after setting pinion gear depth as it is required to properly check forward gear and reverse gear backlash.*

Reverse Gear

DETERMINING REVERSE GEAR BACKLASH

NOTE: *Reverse gear backlash is adjustable using shims; it can be checked as follows:*

1. Install Driver Tool (91-18605) into reverse gear assembly.
2. Slide Pilot Ring (91-18603) over driver tool and seat pilot ring against inner ledge in gear case.
3. Thread Retainer (91-18604) into gear case cover nut threads.
4. Torque Screw (91-18602) to 45 lb. in. (5 Nm) against driver tool.

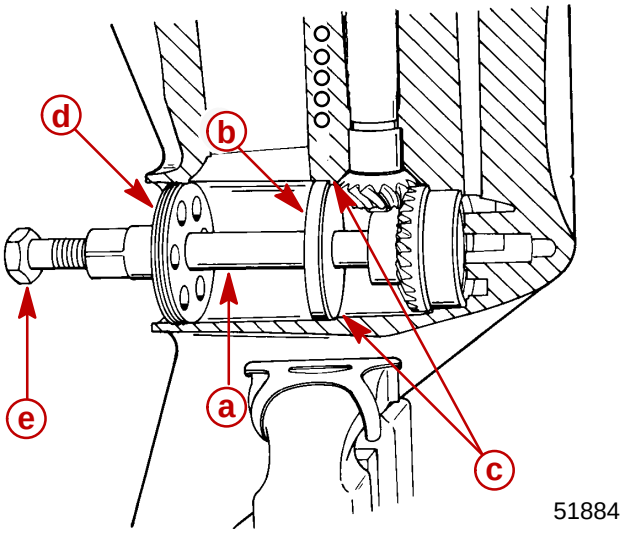

a -Driver Tool (91-18605)
b -Pilot Ring (91-18603)
c -Inner Ledge
d -Retainer (91-18604)
e -Screw (91-18602) [Torque to 45 lb. in. (5 Nm)]

5. Thread stud adapter [from Bearing Preload Tool (91-14311A1)] all the way onto stud.
6. Install: Backlash Indicator Tool (91-78473)
   Dial Indicator Holder (91-89897)
   Dial Indicator (91-58222A1)
7. Position dial indicator pointer on line marked “1” on Backlash Indicator Tool, if gear ratio is 1.87:1 (15 teeth on pinion gear), or on line marked “2” on Backlash Indicator Tool, if gear ratio is 2:1 (14 teeth on pinion gear).
8. Lightly turn driveshaft back-and-forth (no movement should occur at propeller shaft).

9. Dial Indicator registers amount of backlash, which should be 0.030 in. to 0.050 in. (0.76 mm to 1.27 mm).

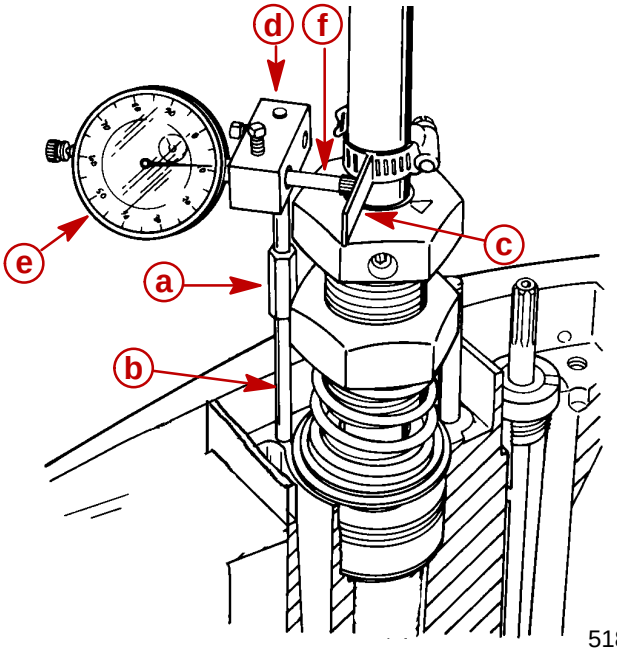

51880

a -Stud Adaptor (from 91-14311A1)
b -Stud
c -Backlash Indicator Tool (91-78473)
d -Dial Indicator Holder (91-89897)
e -Dial Indicator (91-58222A1)
f -Dial Indicator Pointer

NOTE: *If reverse gear backlash is not within specifications, then gear case is not properly assembled or component(s) within gear case are excessively worn and must be replaced before returning gear case to service.*

10. Remove Driver Tool, Pilot Ring, Retainer and Screw from gear case.

Forward Gear

DETERMINING FORWARD GEAR BACKLASH

1. Install a load washer (12-37429) over a 44-93003 propeller shaft so that it seats against the REAR shoulder of the clutch spline teeth.

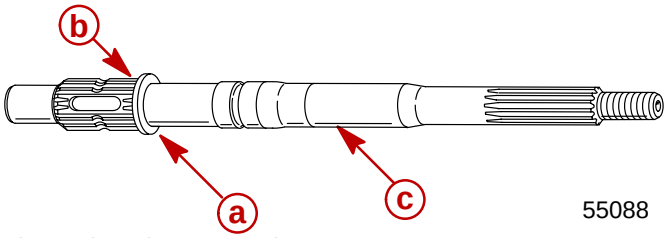

55088

a -Load Washer (12-37429)
b -Shoulder
c -Propeller Shaft (44-93003)

2. Assemble BEARING CARRIER, BEARING ADAPTOR, THRUST WASHER, THRUST BEARING, and FORWARD GEAR onto propeller shaft.
3. Position shim against shoulder in gear case.

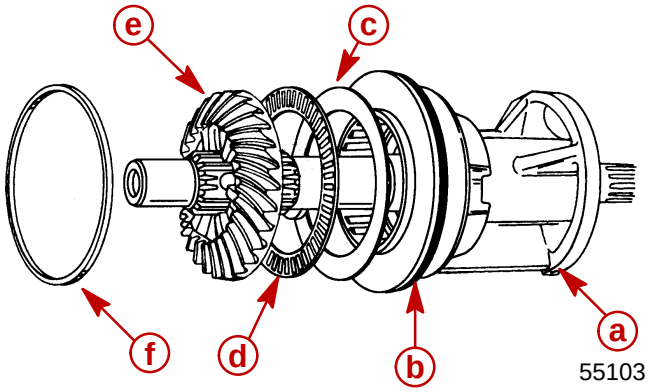

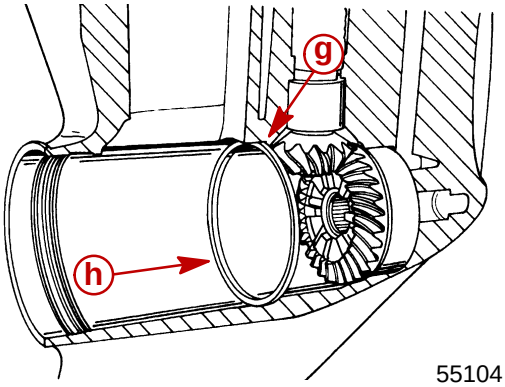

a -Bearing Carrier
b -Bearing Adaptor
c -Thrust Washer
d -Thrust Bearing
e -Forward Gear
f -Shim (PLACE IN GEARCASE FIRST)
g -Shoulder
h -Shim

4. Insert entire propeller assembly into gear case.
5. Install tab washer and cover nut. Torque cover nut to 100 lb. ft. (135.5 N m) to seat forward gear assembly in gear case.

NOTE: *Drill a 3/8 in. (22.2 mm) diameter hole through the side (PROPELLER NUT END) of a 5-1/2 in. x 1-1/2 in. (139.7 mm x 38.1 mm) long piece of PVC pipe. A screwdriver may be inserted thru pipe into propeller shaft splines to prevent PVC pipe from turning while tightening retaining nut.*

6. Install a 5-1/2 in. x 1-1/2 in. (139.7 mm x 38.1 mm) long piece of PVC pipe (obtain locally) over propeller shaft and secure it against the bearing carrier with a flat washer and nut.

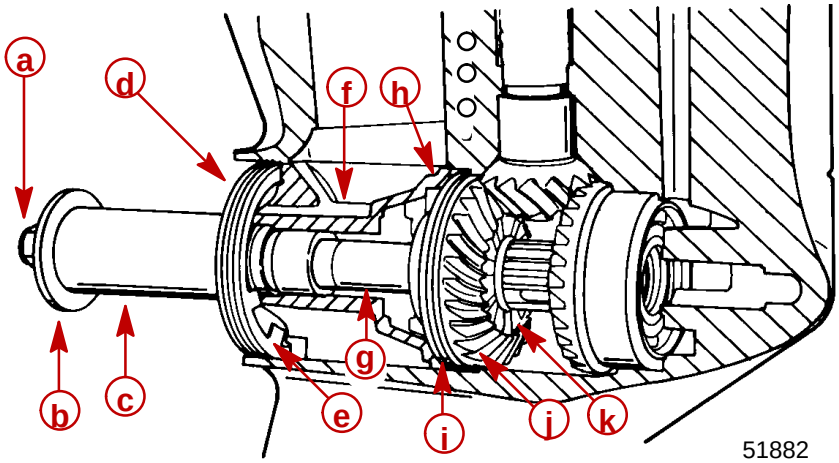

a -Prop Nut
b -Flat Washer
c -PVC Pipe [5 in. x 2 in. (127 mm x 50.8 mm)]
d -Cover Nut
e -Tab Washer
f -Bearing Carrier
g -Prop Shaft
h -Bearing Adaptor
i -Shim
j -Forward Gear
k -Load Washer

7. Tighten nut to 45 lb. in. (5 Nm). This will seat the forward gear against the forward thrust bearing and tends to hold the propeller shaft from moving when measuring backlash.

NOTE: *Bearing Preload Tool (91-44307A1) should still be installed from having previously been used to determine pinion gear depth and reverse gear backlash. If it is not still installed on gear case, refer to* ***"DETERMINING PINION GEAR DEPTH,"*** *previously, for proper installation procedure.*

8. With the proper preload applied to the propeller shaft and the driveshaft, rotate the driveshaft clockwise 5 to 10 complete revolutions. This will seat the forward gear and upper driveshaft bearings and thus provide the most accurate backlash readings.

9. If not previously installed:

   a. Thread stud adaptor [from bearing preload tool (91-44307A1) all the way onto stud.

   b. Install: Backlash Indicator Tool (91-78473)
      Dial Indicator Holder (91-89897)
      Dial Indicator (91-58222A1)

10. Position dial indicator pointer on line marked "1" on BACKLASH INDICATOR TOOL, if gear ratio is 1.87:1 (15 teeth on pinion gear), or on line marked "2" on BACKLASH INDICATOR TOOL, if gear ratio is 2:1 (14 teeth on pinion gear).

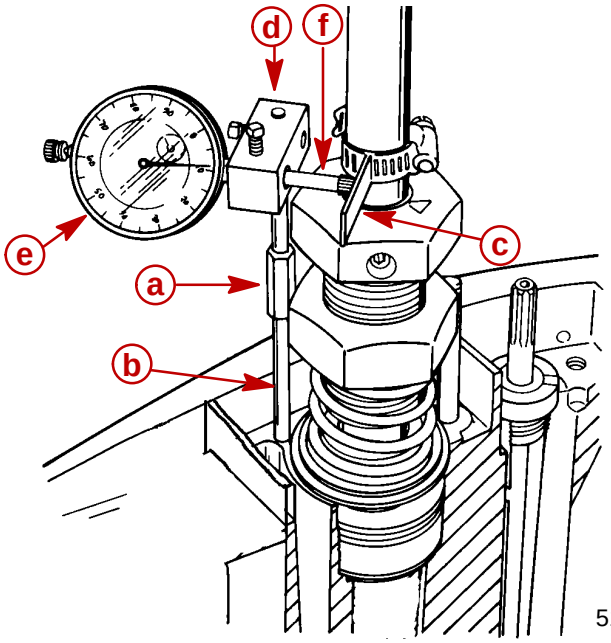

a -Stud Adaptor (from 91-44307A1)
b -Stud
c -Backlash Indicator Tool (91-78473)
d -Dial Indicator Holder (91-89897)
e -Dial Indicator (91-58222A1)
f -Dial Indicator Pointer

11. Gently rock driveshaft back and forth to determine forward gear backlash.

175 and 200 HP models with 1.87:1 Ratio = 0.018 in. to 0.027 in. (0.46 mm - 0.69 mm) backlash.

135 and 150 HP models with 2.00:1 Ratio = 0.015 in. to 0.022 in. (0.38 mm - 0.56 mm) backlash.

12. If backlash is less than the specifications, then a larger shim should be installed. Conversely, if the backlash indicated is greater than specifications, then a smaller shim should be installed.

NOTE: *By adding or subtracting 0.002 in. (0.051 mm) shim, the backlash will change approximately 0.002 in. (0.051 mm).*

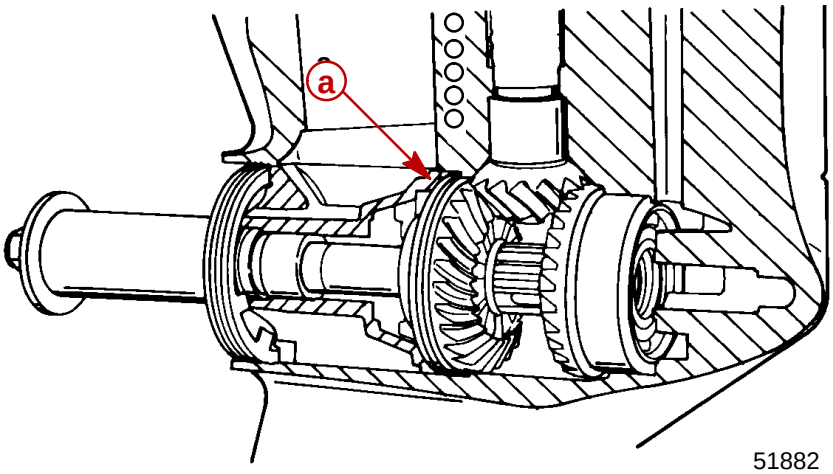

a -Shim

13. If forward gear backlash is within specifications, then Bearing Preload Tool, Dial Indicator, Backlash Indicator Tool/Dial Indicator Holder, PVC pipe, forward gear assembly, bearing adaptor, bearing carrier and test propeller shaft can all be removed from the gear case.

Propeller Shaft/Forward Gear Bearing Adapter/Bearing Carrier

REASSEMBLY

1. Position sliding clutch onto propeller shaft. “GROOVED RINGS” are for manufacturing purposes only and may be positioned towards either gear. Cross pin hole and detent hole in sliding clutch must line up with cross pin slot and detent notch in propeller shaft.

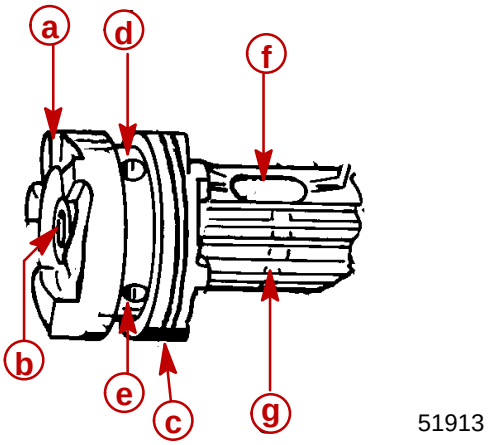

a -Sliding Clutch
b -Propeller Shaft
c -Grooved Rings
d -Cross Pin Hole
e -Detent Hole
f -Cross Pin Slot
g -Detent Notches

2. Place a small amount of Quicksilver 2-4-C w/Teflon Lubricant on actuator rod and install cam follower.

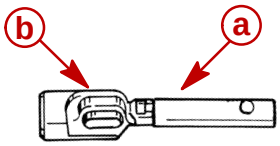

a -Actuator Rod
b -Cam Follower

3. Slide clutch actuator assembly into propeller shaft. Align cross pin slot in actuator rod with cross pin slot in clutch/propeller shaft.

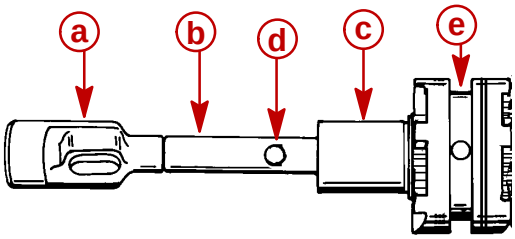

51875

a -Cam Follower
b -Clutch Actuator Rod
c -Propeller Shaft
d -Cross Pin Slot
e -Clutch/Propeller Shaft

4. Insert cross pin through sliding clutch, propeller shaft and actuator rod forcing cross pin tool out.

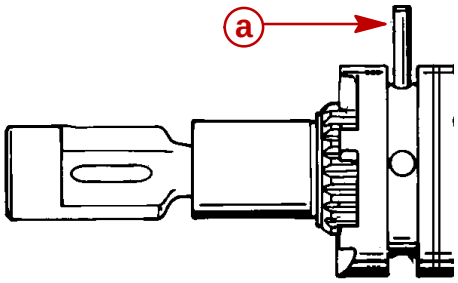

51875

a -Cross Pin

5. Apply a small amount of 2-4-C w/Teflon Marine Lubricant (92-90018A12) to the rounded end of detent pin. Position detent pin in detent pin hole of sliding clutch with rounded end of pin toward propeller shaft.

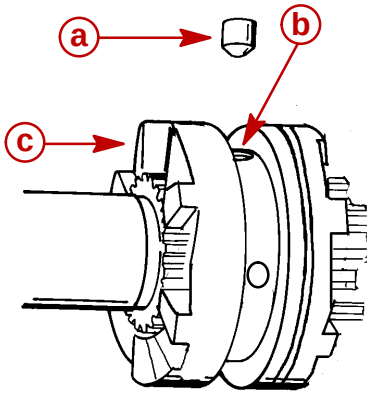

51879

a -Detent Pin
b -Detent Pin Hole
c -Sliding Clutch

6. Install cross pin retaining spring onto sliding clutch as follows:

IMPORTANT: DO NOT over-stretch retaining spring when installing onto sliding clutch.

   a. Install spring.

      (1.) Spirally wrap spring into groove on sliding clutch.

      (2.) Position spring in groove so that straight end of spring is against the side of groove.

7. Place gear housing in a soft jaw vise with the driveshaft in a vertical position.
8. Coat cam pocket of cam follower with 2-4-C w/Teflon Marine Lubricant (92-90018A12).
9. Place shift cam into cam pocket of cam follower with numbered side of cam facing up.
10. Slide propeller shaft assembly into reverse gear assembly.

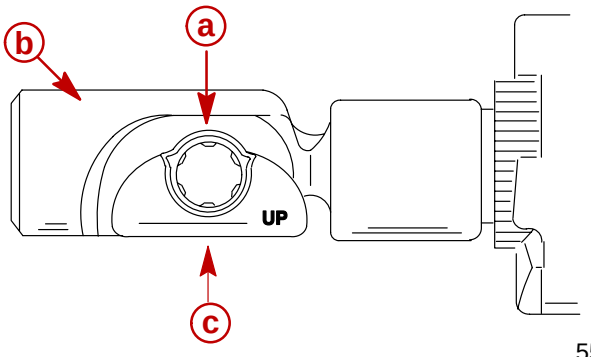

55095

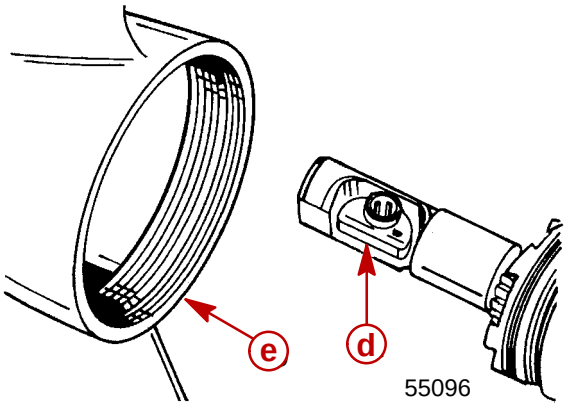

55096

a -Cam Pocket
b -Cam Follower
c -Shift Cam
d -Shift Cam (Position as Shown)
e -Gear Housing

11. Apply a light coat of 2-4-C w/Teflon to the threads of the shift shaft bushing.
12. Insert shift shaft down shift shaft hole in gear housing and into shift cam. It may be necessary to rotate shift shaft back-and-forth slightly in order for splines of shift shaft to match up with splines of shift cam. Thread bushing into position, but do not tighten down at this time.

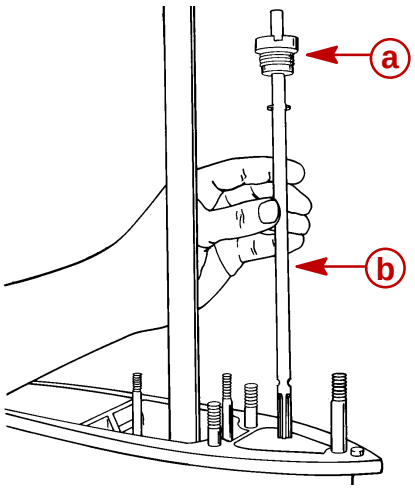

51867

a -Shift Shaft Bushing
b -Shift Shaft

13. Install appropriate spacer shim into the gear housing.
14. Apply Quicksilver Super Duty Gear Lubricant to to thrust bearing and install thrust bearing and thrust race onto forward gear bearing adaptor.

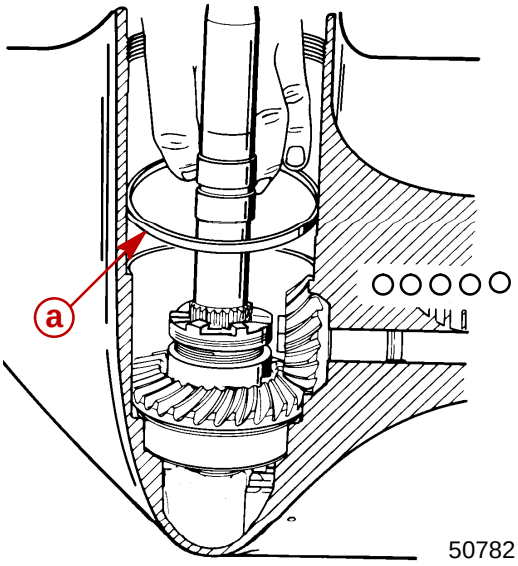

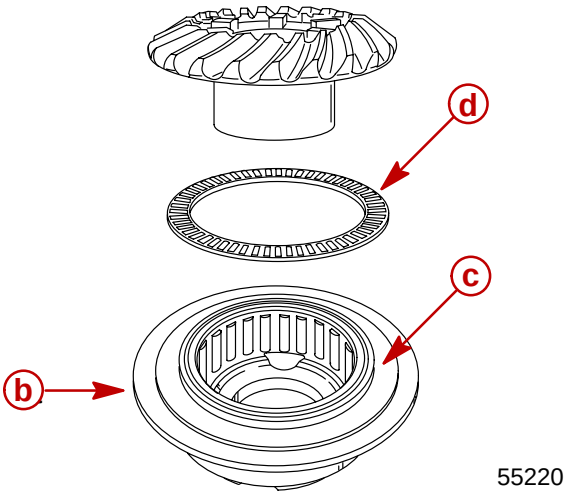

a -Shim
b -Bearing Adaptor
c -Thrust Washer
d -Thrust Bearing

15. Insert Forward Gear Installation Tool (91-815850) into forward gear/bearing adaptor assembly.
16. Install tool with adaptor assembly over propeller shaft and into gear housing. Applying downward pressure to bearing adaptor, remove installation tool from assembly.

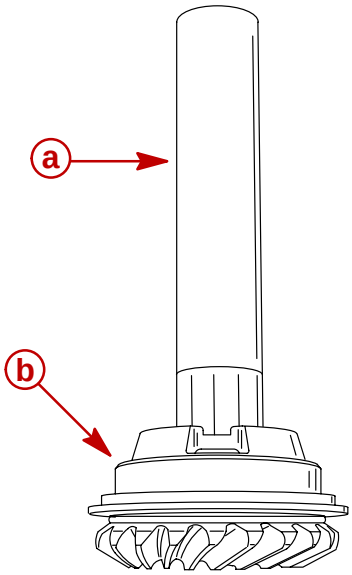

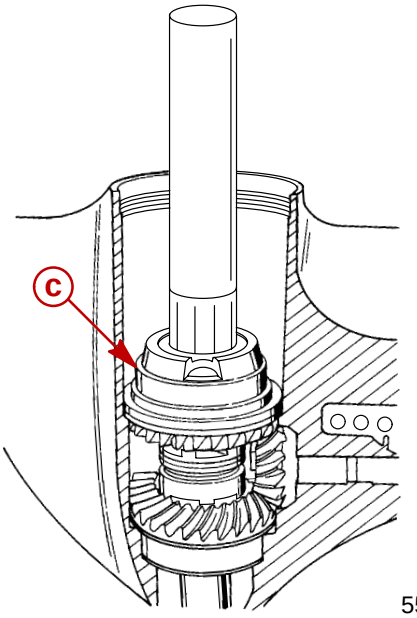

a -Forward Gear Installation Tool (91-815850)
b -Forward Gear/Bearing Adaptor Assembly
c -Forward Gear Bearing Adaptor

17. Install thrust race on top of bearing adaptor.
18. Apply Quicksilver Super Duty Gear Lubricant to small thrust bearing and install bearing on thrust race.

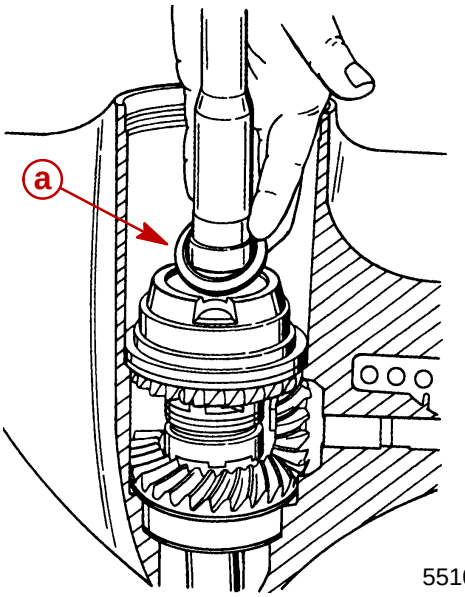

55107

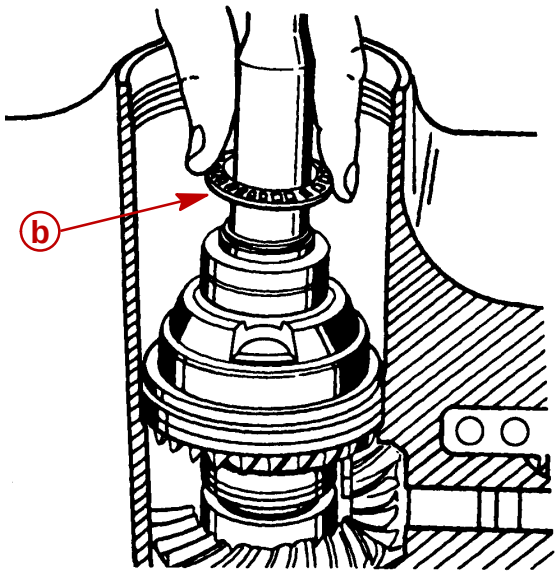

55108

a -Thrust Race
b -Thrust Bearing

19. Install thrust collar with its **STEPPED SIDE DOWN** toward the small thrust bearing.
20. Pull up slightly on the propeller shaft to gain access to the groove on the shaft for the keepers. Install the 2 keepers into the groove and lower the propeller shaft.

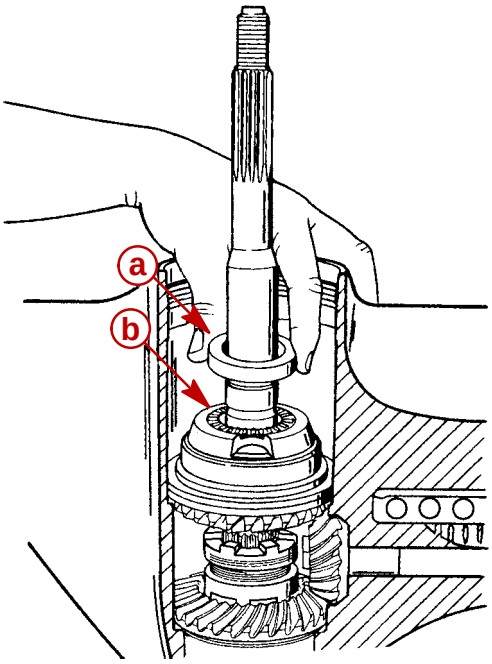

55109

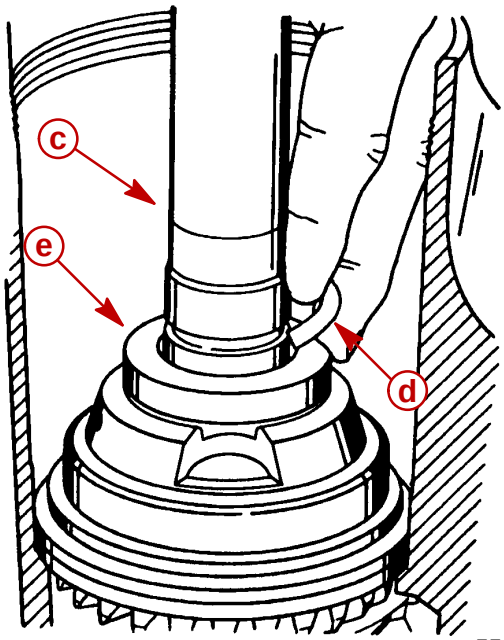

55110

a -Thrust Collar
b -Thrust Bearing
c -Propeller Shaft
d -Keepers (2)
e -Thrust Collar

21. Install second thrust collar with its stepped side **UP**.
22. Apply Quicksilver Super Duty Gear Lubricant to the second thrust bearing and install it on top of the second thrust collar.

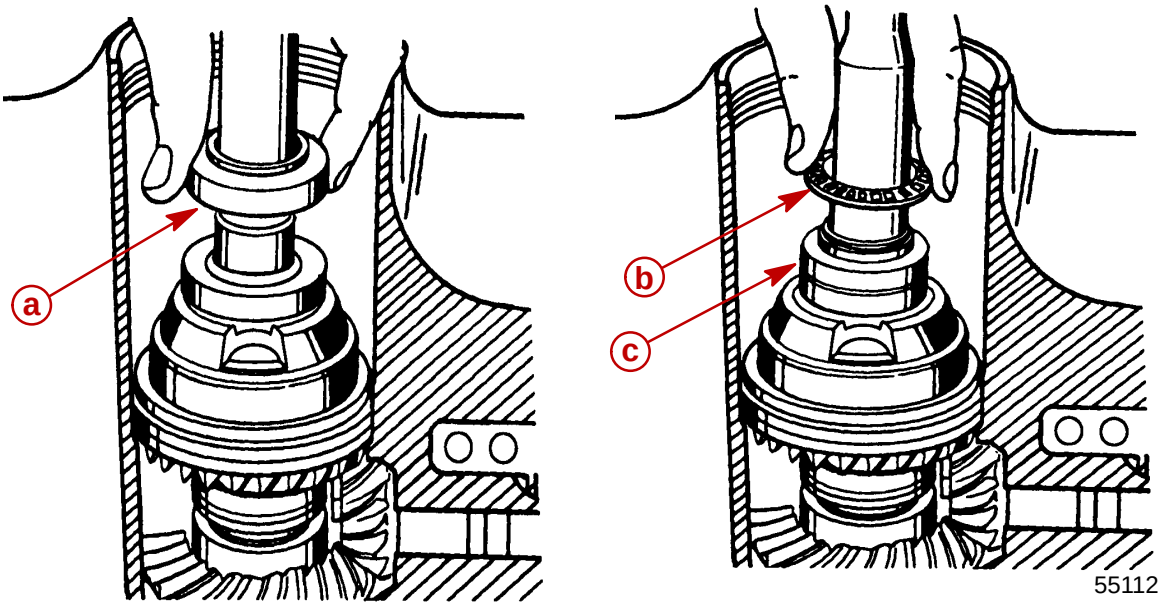

a -Thrust Collar
b -Thrust Bearing
c -Thrust Collar

23. Apply Quicksilver Super Duty Gear Lubricant to to second small thrust bearing race and install race to the surface inside of the bearing carrier.
24. Apply Quicksilver 2-4-C w/Teflon Marine Lubricant to bearing carrier O-ring. Install O-ring onto bearing adaptor.

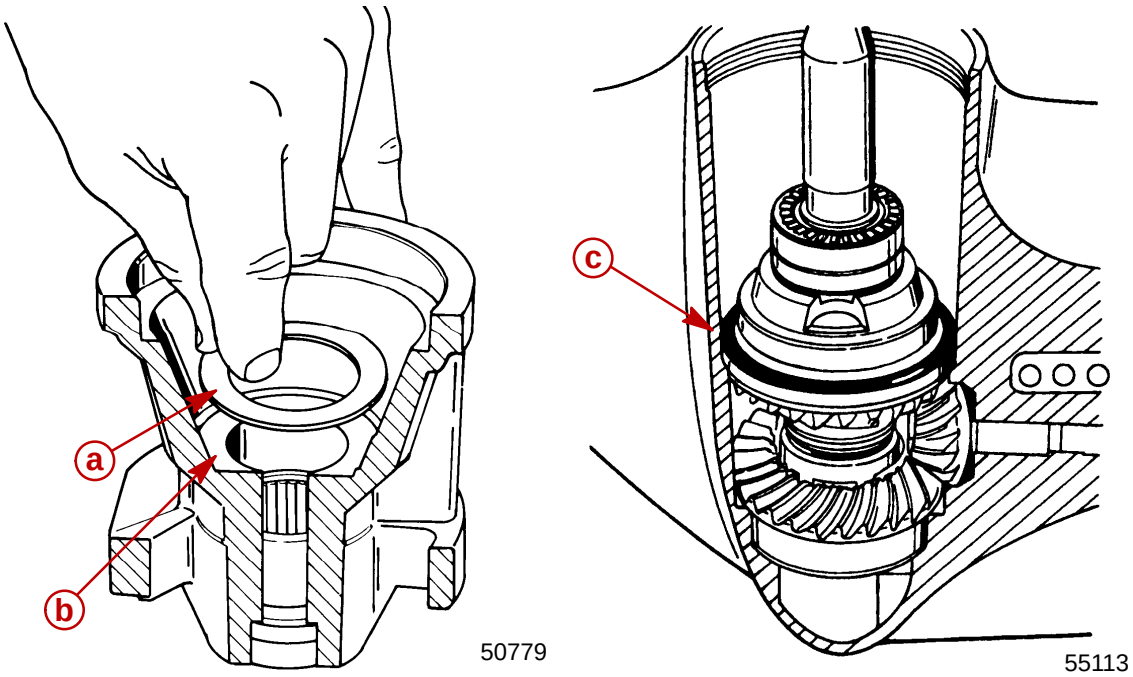

a -Thrust Race
b -Bearing Carrier Race Surface
c -O-ring

25. Apply Quicksilver 2-4-C w/Teflon Marine Lubricant to:
    a. Outer diameter of bearing carrier which contacts gear case.
    b. Space between carrier oil seals.
26. Apply Quicksilver Super Duty Gear Lubricant to bearing carrier needle bearing.
27. Install bearing carrier into gear housing.
28. Verify bearing carrier keyway is aligned with gear housing keyway and install bearing carrier key.
29. Place tab washer against bearing carrier.

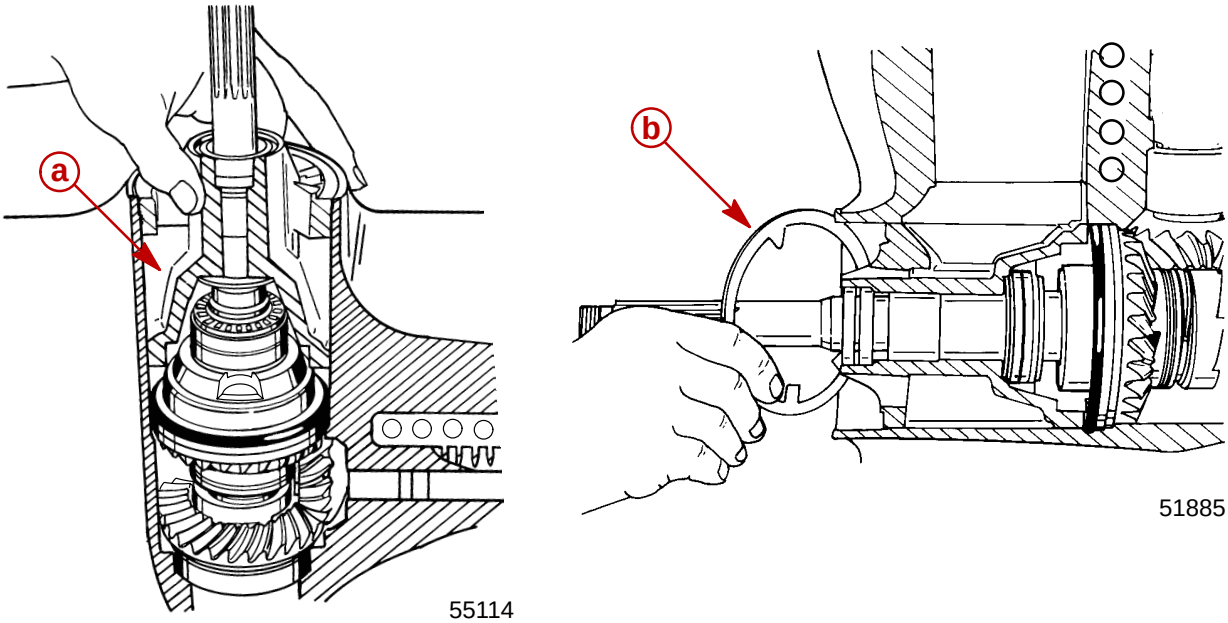

a -Bearing Carrier
b -Tab Washer

30. Apply 2-4-C w/Teflon to threads of cover nut and install cover nut in gear housing. Verify that the word “OFF” and arrow are visible.

NOTE: *Before torquing bearing carrier cover nut, gear case should either be mounted in a stand specifically designed for holding gear cases or bolted to a driveshaft housing to avoid possible damage to the gear case.*

31. Using Cover Nut Tool (91-61069), torque cover nut to 210 lb. ft. (285 Nm).

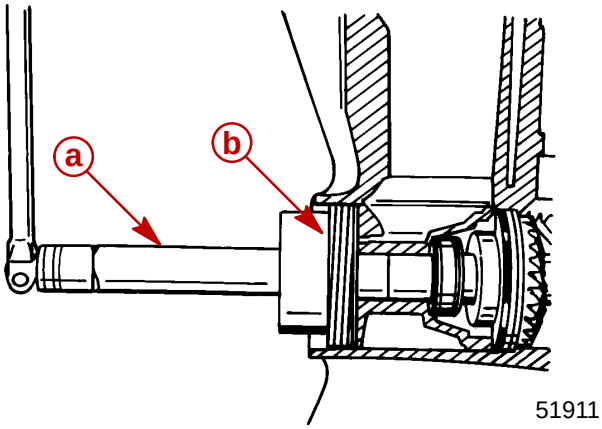

a -Retainer Nut Tool (91-61069)
b -Retainer Nut

32. Bend one lock tab of tab washer into cover nut (only one will align).
33. Bend remaining tabs of tab washer toward front of gear housing.
34. Use Shift Shaft Bushing Tool (91-31107) and torque shift shaft bushing to 50 lb. ft. (68 Nm).

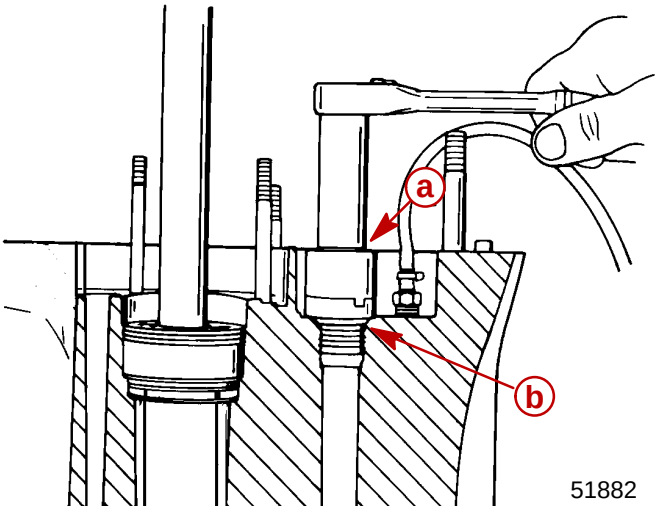

a -Shift Shaft Bushing Tool (91-31107)
b -Shift Shaft Bushing

Water Pump

REASSEMBLY/INSTALLATION

1. Install oil seals into water pump base, as follows:
   a. Place water pump base on a press.
   b. Just before installing each seal apply Loctite 271 on outside diameter of oil seal.
   c. With a suitable mandrel, press the smaller diameter oil seal into pump base with lip of oil seal toward impeller side of base.
   d. With a suitable mandrel, press the larger diameter oil seal into pump base with lip of oil seal toward gear housing side of base.
   e. Wipe any excess Loctite from oil seals and water pump base.
2. Install O-ring into O-ring groove of water pump base. Lubricate O-ring and oil seals with 2-4-C w/Teflon Marine Lubricant (92-90018A12).

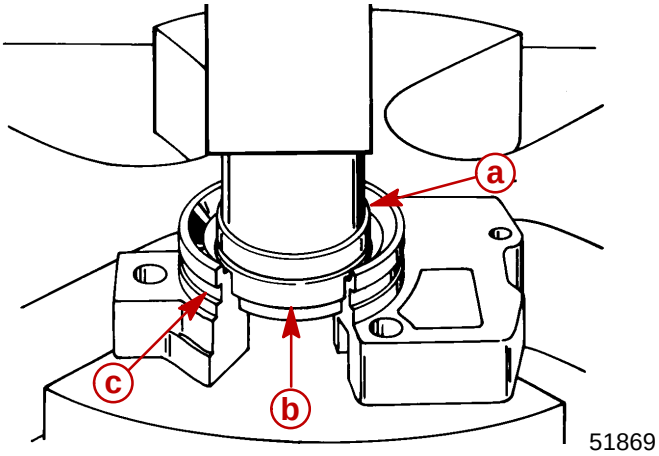

a -Mandrel
b -Oil Seal (Smaller OD)
c -O-Ring Groove

3. Install divider block if removed. Use RTV Sealer to seal seams between divider block and gear housing.
4. Install a new water pump base gasket and install water pump base.

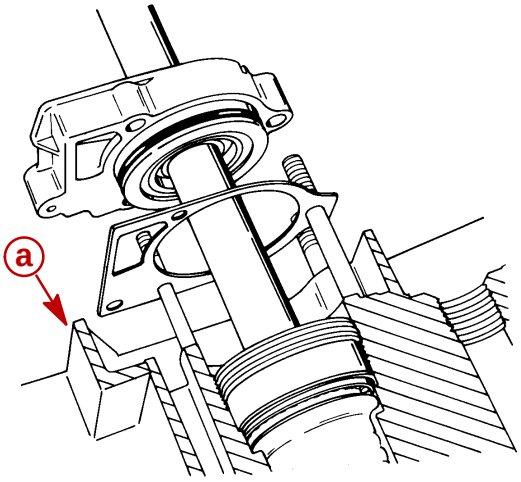

51878

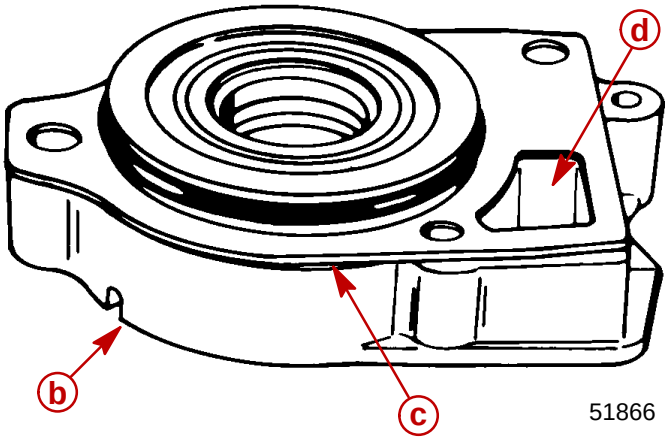

51866

a -Divider Block
b -Water Pump Base
c -Gasket
d -Hole (MUST be positioned as shown)

5. Install the following in order: Pump base to face plate gasket, face plate to pump cover gasket. Gaskets and face plate are indexed by dowel pin location and must be installed correctly.

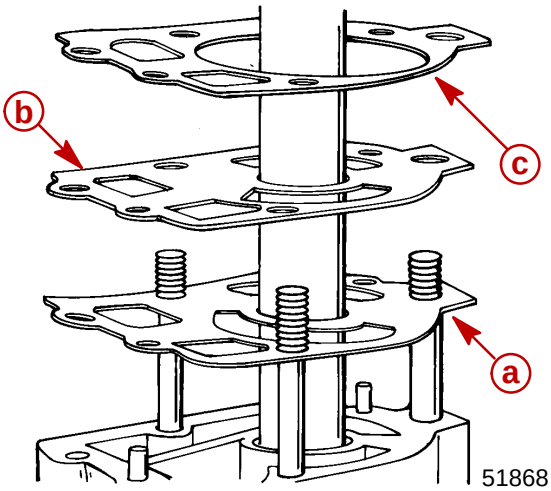

51868

a -Gasket (Water Pump Base to Face Plate)
b -Face Plate
c -Gasket (Face Plate to Water Pump Cover)

6. Place impeller drive key on flat of driveshaft. Hold key on driveshaft with a small amount of Quicksilver 2-4-C w/Teflon Marine Lubricant (92-90018A12).

IMPORTANT: When completing gear housing repair that requires removal of water pump impeller, it is recommended that the impeller be replaced. If it is necessary to reuse the impeller, DO NOT install in reverse to original rotation or premature impeller failure will occur. Original rotation is clockwise.

⚠ CAUTION
A visual inspection of impeller drive key MUST BE made to determine that drive key is on flat of driveshaft after impeller is installed. If key has moved off flat of driveshaft, repeat Steps 6 and 7.

7. Slide impeller down driveshaft to impeller drive key. Align drive key with keyway in the center hub of impeller, and slide impeller over drive key.
8. If removed, install new water pump insert into pump cover as follows:
   a. Apply Quicksilver Perfect Seal to water pump insert area of pump cover.
   b. Install water pump insert into pump cover, being sure that tab on insert enters recess in pump cover.
   c. Wipe any excess Quicksilver Perfect Seal from insert and cover.

NOTE: *If 2 holes were drilled in top of water pump cover to aid in removal of insert, fill holes with RTV Sealer or equivalent. Allow to cure 24 hours prior to operating engine.*

9. Install water tube seal into pump cover. Plastic side of seal goes into cover first.
10. Reinstall water tube guide into water pump cover.
11. Apply a light coat of Quicksilver 2-4-C w/Teflon Marine Lubricant to inside of water pump insert.
12. Position assembled water pump cover over driveshaft and lower over water pump studs. Rotate driveshaft in a clockwise direction (viewed from top), while pushing down on pump cover to ease impeller entry into cover.
13. Install water pump cover retainer washers, nuts and bolt.

⚠ CAUTION
DO NOT over-torque nuts and bolt, as this could cause cover to crack during operation.

14. Torque water pump nuts to 50 lb. in. (6.0 Nm), and water pump bolt to 35 lb. in. (4 Nm).
15. Install centrifugal slinger over driveshaft and down against pump cover.

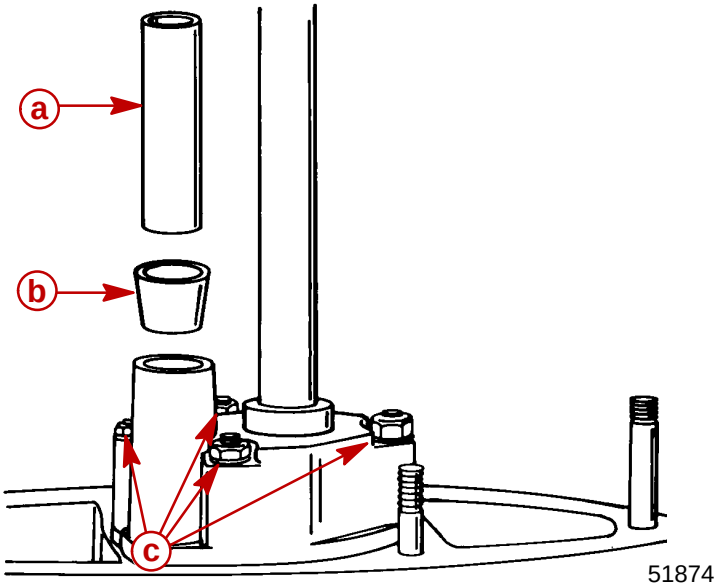

a -Water Tube Guide
b -Water Tube Seal
c -Nuts, Bolts and Washers

Gear Lubricant Filling Instructions

1. Remove any gasket material from “Fill” and “Vent” screws and gear housing.
2. Install new gaskets on “Fill” and “Vent” screws.

IMPORTANT: Never apply lubricant to gear housing without first removing “Vent” screw, or gear housing cannot be filled because of trapped air. Fill gear housing ONLY when housing is in a vertical position.

3. Slowly fill housing thru “Fill” hole with Quicksilver Super Duty Lower Unit Lubricant until lubricant flows out of “Vent” hole and no air bubbles are visible.
4. Install “Vent” screw into “Vent” hole.

IMPORTANT: DO NOT lose more than one fluid ounce (30cc) of gear lubricant while reinstalling “Fill” screw.

5. 5. Remove grease tube (or hose) from “Fill” hole and quickly install “Fill” screw into “Fill” hole.

Installing Gear Housing to Driveshaft Housing

⚠ WARNING

Disconnect high tension leads from spark plugs and remove spark plugs from engine before installing gear housing onto driveshaft housing.

1. Tilt engine to full up position and engage the tilt lock lever.
2. Apply a light coat of Quicksilver 2-4-C w/Teflon Marine Lubricant onto driveshaft splines.

⚠ CAUTION

DO NOT allow lubricant on top of driveshaft. Excess lubricant, that is trapped in clearance space, will not allow driveshaft to fully engage with crankshaft. Subsequently, tightening the gear housing nuts (while excess lubricant is on top of driveshaft) will load the driveshaft/crankshaft and damage either or both the powerhead and gear housing. Top of driveshaft is to be wiped free of lubricant.

3. Apply a light coat of Quicksilver 2-4-C w/Teflon Marine Lubricant onto shift shaft splines. (DO NOT allow lubricant on top of shift shaft.)
4. Apply a thin bead of G.E. Silicone Sealer (92-90113--2) against the top of divider block.
5. Insert trim tab bolt into hole in rear of gear housing to driveshaft housing machined surface.
6. Shift gear housing into forward gear and place guide block anchor pin into forward gear position.

Counter Rotation Outboard

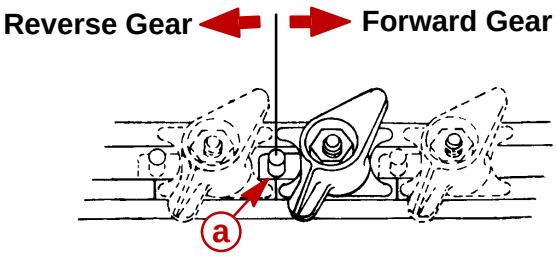

a -Guide Block Anchor Pin

7. Position gear housing so that the driveshaft is protruding into driveshaft housing.

NOTE: *If, while performing Step 8, the driveshaft splines will not align with crankshaft splines, place a propeller onto propeller shaft and turn it counterclockwise as the gear housing is being pushed toward driveshaft housing.*

8. Move gear housing up toward driveshaft housing while aligning shift shaft splines and water tube with water tube guide (in water pump cover).
9. Place flat washers onto studs (located on either side of driveshaft housing). Start a nut (a) on these studs and tighten finger-tight.
10. Start bolt (b) at rear of gear housing inside trim tab recess. DO NOT tighten bolt at this time.
11. Recheck shift shaft spline engagement and correct if necessary.

IMPORTANT: Do not force gear case up into place with attaching nuts.

12. Evenly tighten 2 nuts (a) which were started in Step 9. Torque to listing in **"Torque Specifications,"** preceding.
13. After 2 nuts (located on either side of driveshaft housing) are tightened, check shift operation as follows:
    a. Place guide block anchor pin into forward gear position while turning prop shaft. Rotate flywheel clockwise (viewed from top); propeller shaft should rotate clockwise.
    b. Place guide block anchor pin into NEUTRAL position. Propeller shaft should rotate freely clockwise/counterclockwise.
    c. Place guide block anchor pin into REVERSE gear position. Rotate flywheel clockwise (viewed from top); propeller shaft should rotate counterclockwise.

IMPORTANT: If shifting operation is not as described, preceding, the gear housing must be removed and the cause corrected.

14. Install washers and nuts (c) onto studs (located on bottom center of anti-cavitation plate). Torque to listing in **"Torque Specifications,"** preceding.

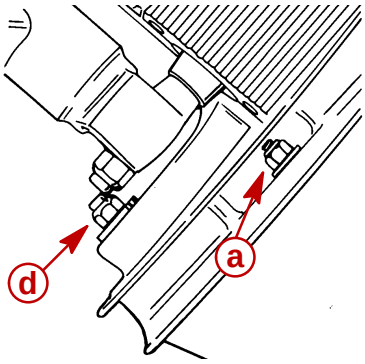

51873

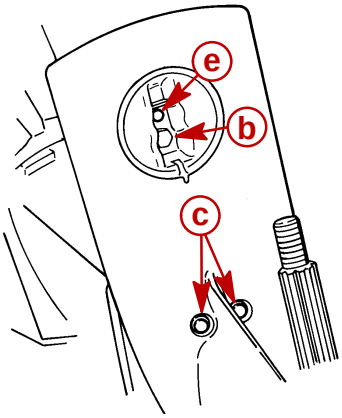

51866

15. Install special flat washer and nut (d) on stud at leading edge of driveshaft housing. Torque to listing in **"Torque Specifications,"** preceding.
16. Torque bolt (started in Step 10) to listing in **"Torque Specifications,"** preceding.
17. Install trim tab, adjust to position in which it had previously been installed, and tighten bolt (e) securely.
18. Install plastic cap into trim tab bolt opening at rear edge of driveshaft housing.

Propeller Installation

⚠ WARNING

When installing or removing propeller, because of the engine's ease in starting, VERIFY that the remote control is in NEUTRAL position and that the key switch is "OFF." Place a block of wood between the anti-cavitation plate and propeller to prevent accidental starting and to protect hands from propeller blades while removing or installing nut.

1. To aid in future removal of the propeller, liberally coat the propeller shaft splines with one of the following Quicksilver products:
   -- Anti-Corrosion Grease (92-78376A6)
   -- Special Lubricant 101 (92-13872A1)
   -- 2-4-C Marine Lubricant (92-90018A12)
   -- Perfect Seal (92-34227--1)
2. Place forward thrust hub over propeller shaft with shoulder side toward propeller.
3. Place propeller on propeller shaft and slide it up against thrust hub.
4. Place continuity washer (if equipped) onto shoulder of rear thrust hub.
5. Place rear thrust hub, tab washer and propeller nut on propeller shaft.
6. Thread propeller nut onto propeller shaft until nut is recessed into tab washer.
7. After propeller nut is recessed into tab washer, tighten nut securely [minimum of 55 lb. ft. (74.5 Nm) torque].
8. Bend 3 of the tabs of tab washer down in grooves of rear thrust hub to secure propeller nut. (If tab washer tabs do not align with slots, continue to tighten propeller nut to obtain alignment. DO NOT loosen nut to align tabs.)

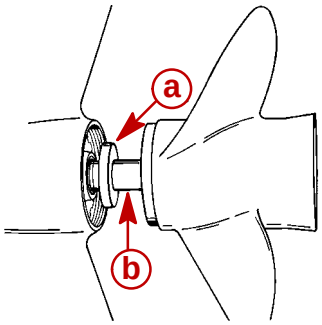

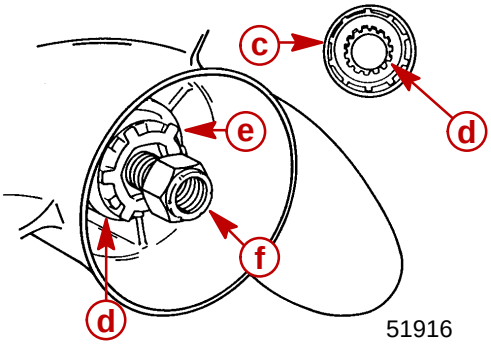

a -Forward Thrust Hub
b -Propeller Shaft
c -Continuity Washer (If Equipped)
d -Rear Thrust Hub
e -Tab Washer
f -Propeller Nut

⚠ CAUTION

DO NOT misinterpret propeller shaft movement with propeller movement. If propeller and propeller shaft together move forward-and-aft, this is normal; however, propeller should not move forward-and-aft on propeller shaft.

9. After first use, retighten propeller nut and again secure with tab washer (Steps 7 and 8, preceding). Propeller should be checked periodically for tightness, particularly if a stainless steel propeller is used.

Speedometer Tube Installation

1. Route speedometer tube from gearcase around lower yoke and push into junction. Junction should be secured to yoke with sta-strap.
2. Route speedometer tube from swivel tube around lower yoke and push into junction. After insertion of speedometer tubes into junction, pull on each tube to verify that they are locked into junction. If tube pulls out, reinsert into junction.

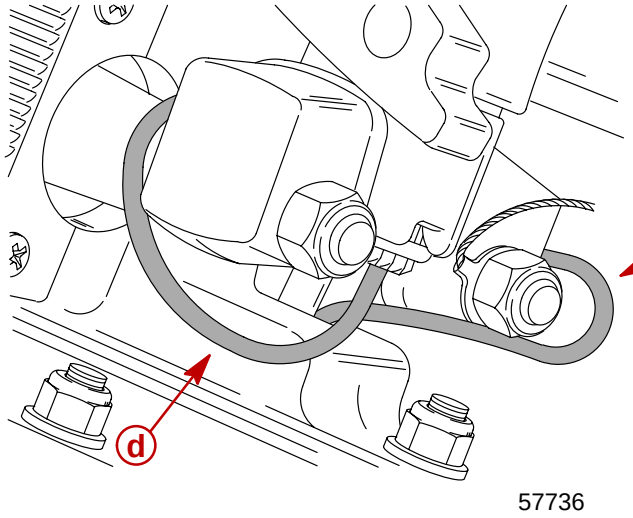

57736

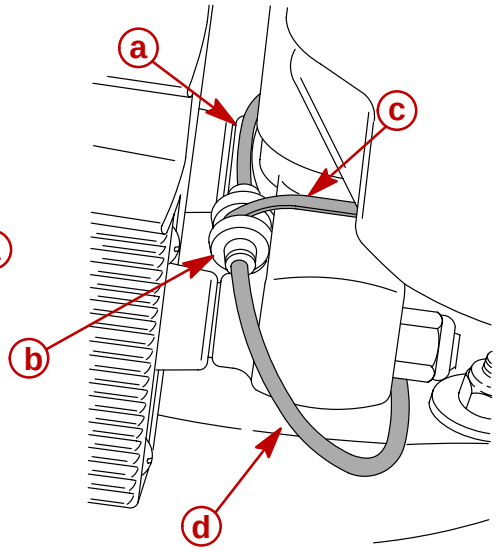

57735

a -Speedometer Tube from Gearcase
b -Junction
c -Sta-strap
d -Speedometer Tube from Swivel Tube